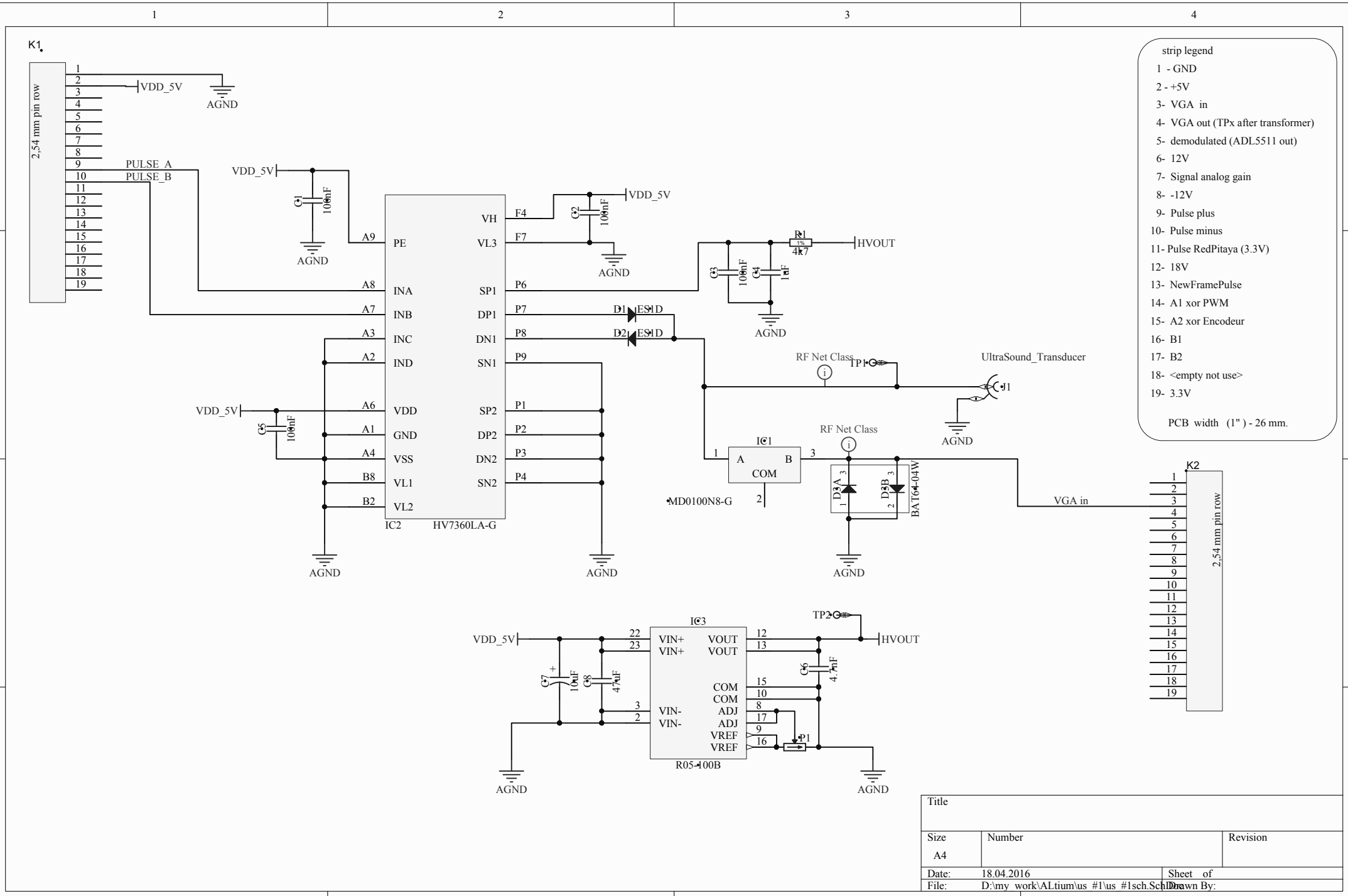
K1
2,54 mm pin row
VDD_5V
AGND
PULSE_A
PULSE_B
C1 100nF
C2 100nF
C3 100nF
C4 1nF
C5 100nF
R1 1% 4k7
HVOUT
IC2 HV7360LA-G
PE
INA
INB
INC
IND
VDD
GND
VSS
VL1
VL2
VH
VL3
SP1
DP1
DN1
SN1
SP2
DP2
DN2
SN2
D1 ESID
D2 ESID
RF Net Class
TP1
UltraSound_Transducer
J1
IC1
MD0100N8-G
D3A
D3B
BAT64-04W
VGA in
K2
IC3
R05-100B
VIN+
VIN-
VOUT
COM
ADJ
VREF
C6 4.7nF
C7 10nF
C8 47nF
TP2
P1
strip legend
1 - GND
2 - +5V
3- VGA in
4- VGA out (TPx after transformer)
5- demodulated (ADL5511 out)
6- 12V
7- Signal analog gain
8- -12V
9- Pulse plus
10- Pulse minus
11- Pulse RedPitaya (3.3V)
12- 18V
13- NewFramePulse
14- A1 xor PWM
15- A2 xor Encodeur
16- B1
17- B2
18- <empty not use>
19- 3.3V
PCB width (1") - 26 mm.
Title
Size
A4
Number
Revision
Date: 18.04.2016
Sheet of
File: D:\my_work\ALtium\us_#1\us_#1sch.SchDoc
Drawn By: