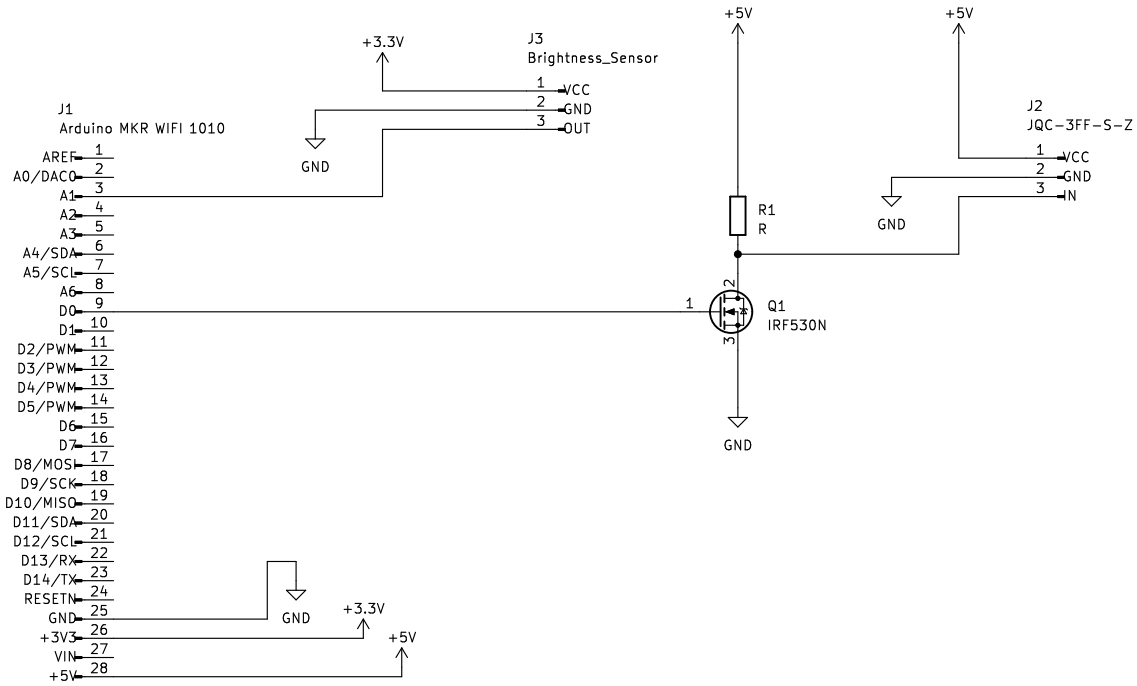


Sheet:
File: Brightness_Sensor_Project.kicad_sch

**Title:**

| Size: A4 | Date: | **Rev:** |
|---|---|---|
| KiCad E.D.A. kicad (7.0.0) | | Id: 1/1 |