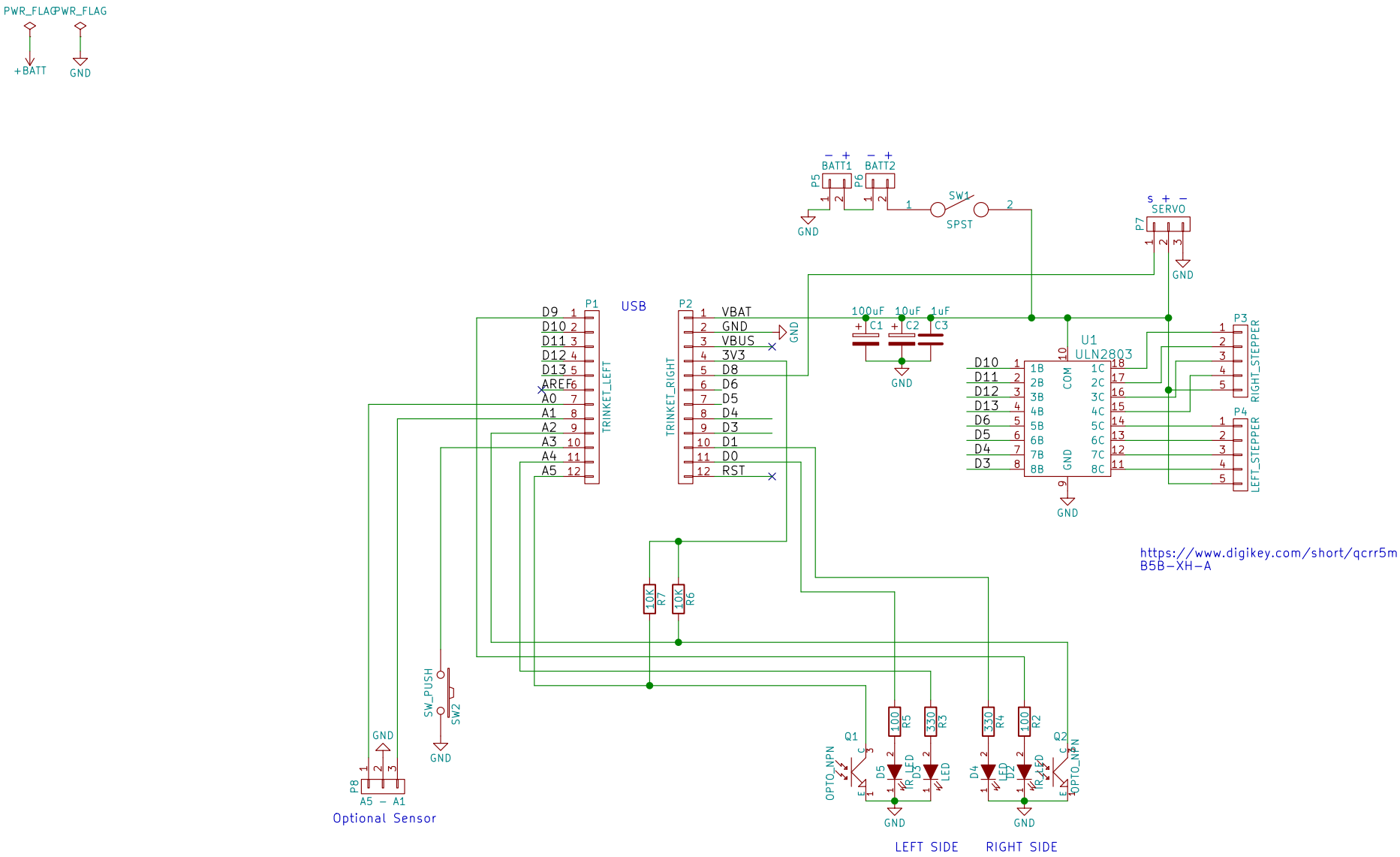

K. Olsen
www.MakersBox.us
Sheet: /
File: base.sch

Title: ChickTech Robot

Size: USLetter	Date:	**Rev:**
KiCad E.D.A. kicad 4.0.7		Id: 1/1