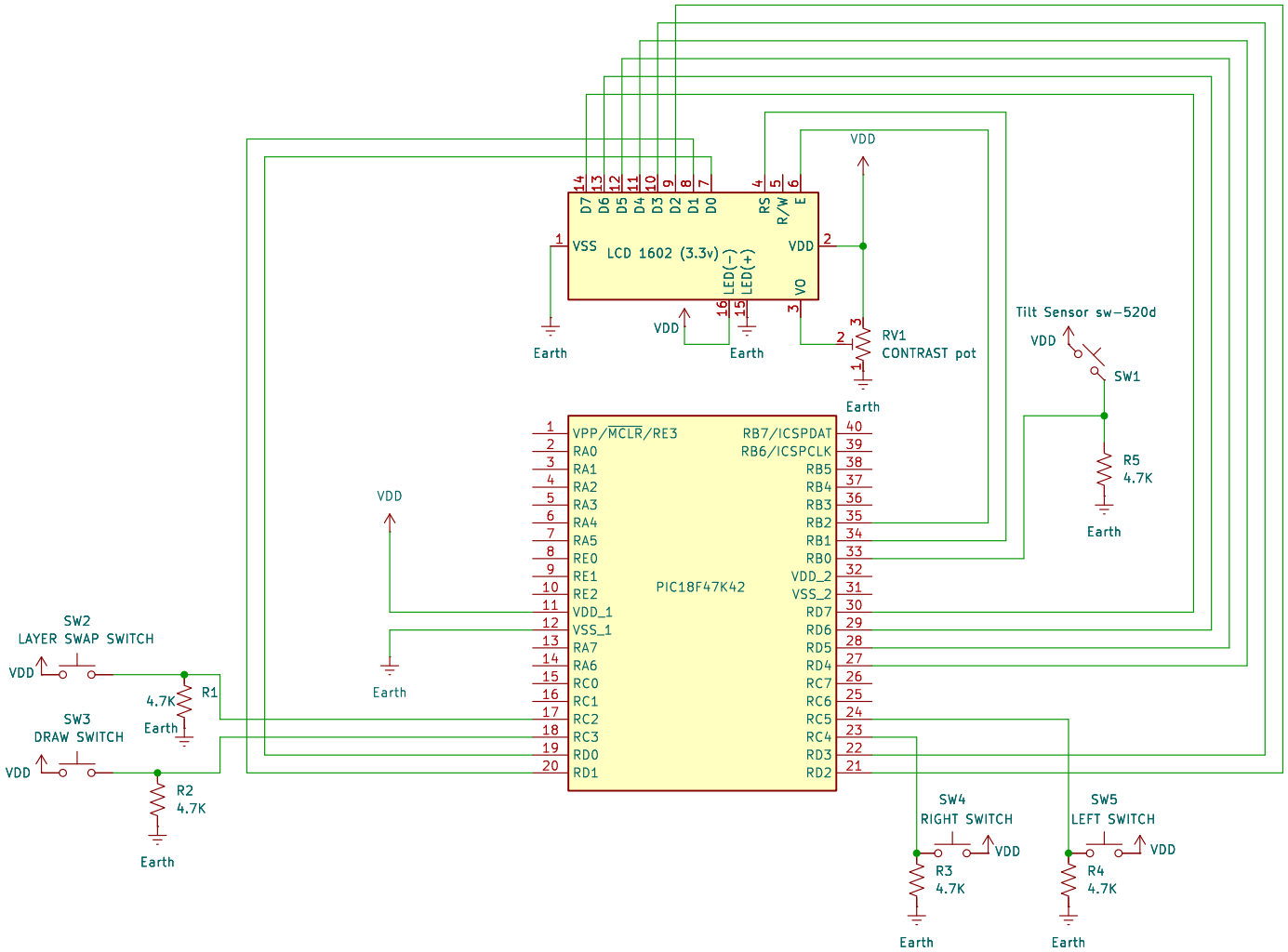

Common VDD is 3.3v
Created by: Alina Matchette
SSU

Sheet: /
File: etchasketch.kicad_sch

Title: Etch-A-Sketch

Size: A4	Date: 5/7/2025	**Rev: 1**
KiCad E.D.A. 8.0.6		Id: 1/1