Interior PMSM Field-Oriented Control

Control Algorithm Architecture & ODE Equations

Interior Permanent Magnet Synchronous Motor (IPMSM) Drive System

Technical Reference Document

Contents

1 Introduction **2**

2 Reference Frames and Coordinate Transformations **2**

2.1 Stationary ABC Frame . . . 2

2.2 Stationary $\alpha\beta$ Frame — Clarke Transform . . . 2

2.3 Rotating dq Frame — Park Transform . . . 3

2.4 Inverse Park Transform . . . 4

3 IPMSM Mathematical Model — ODE Equations **4**

3.1 Voltage Equations in the dq Frame . . . 4

3.2 Electromagnetic Torque — Full Salient-Pole Expression . . . 5

3.3 Mechanical Equation of Motion . . . 5

3.4 Rotor Angle ODE . . . 5

3.5 Complete State-Space Representation . . . 5

4 Operating Regions and Constraints **6**

5 Control Algorithm — Block Descriptions **6**

5.1 Velocity Controller . . . 6

5.2 Current Reference Generator — MTPA and Field Weakening . . . 7

5.2.1 MTPA Trajectory ($\omega_e \leq \omega_{\text{base}}$) . . . 7

5.2.2 Field Weakening ($\omega_e > \omega_{\text{base}}$) . . . 7

5.2.3 Maximum Torque Per Voltage (MTPV) Limiter . . . 7

5.3 Current Controller — Inner Loop . . . 8

5.3.1 d-Axis Current PI Controller . . . 8

5.3.2 q-Axis Current PI Controller . . . 8

5.4 $dq \to abc$ Inverse Transform Block . . . 8

5.5 PWM Generator . . . 8

5.6 Power Converter (Three-Phase Inverter) . . . 9

5.7 Position Sensor Signal Processing . . . 9

5.8 Protection and Auxiliary Functions . . . 9

6 Complete Closed-Loop Signal Flow **10**

7 Controller Tuning Guidelines **10**

7.1 Current Loop — IMC Pole-Zero Cancellation . . . 10

7.2 Speed Loop Bandwidth . . . 11

7.3 Field-Weakening PI Tuning . . . 11

7.4 Anti-Windup . . . 11

8 Notation and Glossary **12**

1. Introduction

The Interior Permanent Magnet Synchronous Motor (IPMSM) differs fundamentally from a surface-mounted PMSM (SPMSM) in that the permanent magnets are buried inside the rotor laminations. This creates **magnetic saliency**: the d-axis inductance L_d is significantly smaller than the q-axis inductance L_q (typically $\xi = L_q/L_d \in [2, 6]$). As a result:

- The electromagnetic torque contains both a **magnet torque** (from $\lambda_m i_q$) and a **reluctance torque** (from $(L_d - L_q) i_d i_q$), the latter being non-negligible and actively exploited.
- The reference d-axis current $i_{d,\text{ref}}$ is *no longer zero*; it is set to a specific negative value to achieve Maximum Torque Per Ampere (MTPA) or to perform field weakening above base speed.
- The current reference generator requires a nonlinear MTPA algorithm and a field-weakening (FW) supervisor.

> **Key IPMSM distinction:** $L_d < L_q$, saliency ratio $\xi = L_q/L_d > 1$. Both i_d and i_q must be controlled simultaneously to maximise torque and efficiency.

Overall FOC Architecture

Figure 1 shows the complete block diagram of the IPMSM FOC drive system as described throughout this document. The blue blocks represent the digital control algorithm running on the microcontroller or DSP, while the grey blocks represent the physical hardware (power converter and motor). The signal flow proceeds from left to right: the outer speed loop generates a torque reference, the current reference generator computes the MTPA or field-weakening setpoints, the inner current loops produce voltage commands, and the PWM generator drives the power converter switches. Sensor feedback (phase currents and rotor position) closes both the inner and outer loops.

2. Reference Frames and Coordinate Transformations

2.1 Stationary ABC Frame

The three-phase stator windings a, b, c are physically separated by 120° in the stationary frame. All phase voltages and currents are defined in this frame.

2.2 Stationary $\alpha\beta$ Frame — Clarke Transform

The Clarke transformation reduces the three-phase system to an equivalent two-phase stationary system:

Equations

The PMSM FOC structure decouples the torque and flux by using the rotor d-q reference frame. This diagram shows the overall architecture of the block.

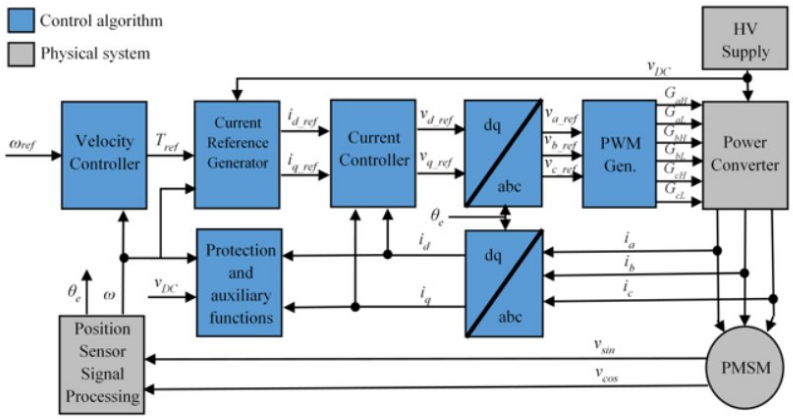

In the diagram:

- ω and ω_{ref} are the measured and reference angular velocities, respectively.
- T_{ref} is the reference electromagnetic torque.
- i and v are stator currents and voltages and subscripts d and q represent the d-axis and q-axis, and subscripts a, b, and c, represent the three stator windings.
- θ_e is the rotor electrical angle.
- G is a gate pulse, subscripts H and L, represent high and low, and subscripts a, b, and c represent the three stator windings.

Figure 1: **IPMSM Field-Oriented Control — Overall Block Diagram.** Blue blocks: digital control algorithm (velocity controller, current reference generator, current controllers, coordinate transforms, PWM generator, protection logic). Grey blocks: physical hardware (power converter and PMSM). Signal notation: ω_{ref} and ω are reference and measured angular velocities; T_{ref} is the reference electromagnetic torque; $i_{d,\text{ref}}$, $i_{q,\text{ref}}$ are the d/q-axis current references from the MTPA/FW algorithm; $v_{d,\text{ref}}$, $v_{q,\text{ref}}$ are the PI controller output voltages; $v_{a,\text{ref}}$, $v_{b,\text{ref}}$, $v_{c,\text{ref}}$ are the three-phase voltage references fed to the PWM generator; G_{aH}–G_{cL} are the six gate pulses for the three inverter half-bridge legs; i_a, i_b, i_c are the measured phase currents; θ_e is the electrical rotor angle; and $v_{\sin}$, $v_{\cos}$ are the resolver signals used for position decoding.

$$i_\alpha = \tfrac{2}{3}\left[i_a - \tfrac{1}{2}i_b - \tfrac{1}{2}i_c\right] \tag{T.1}$$

$$i_\beta = \tfrac{2}{3}\left[\tfrac{\sqrt{3}}{2}i_b - \tfrac{\sqrt{3}}{2}i_c\right] \tag{T.2}$$

$$v_\alpha = \tfrac{2}{3}\left[v_a - \tfrac{1}{2}v_b - \tfrac{1}{2}v_c\right] \tag{T.3}$$

$$v_\beta = \tfrac{2}{3}\left[\tfrac{\sqrt{3}}{2}v_b - \tfrac{\sqrt{3}}{2}v_c\right] \tag{T.4}$$

2.3 Rotating dq Frame — Park Transform

The Park transformation rotates to the rotor-synchronous d-q frame using electrical angle θ_e:

$$i_d = i_\alpha \cos\theta_e + i_\beta \sin\theta_e \tag{T.5}$$

$$i_q = -i_\alpha \sin\theta_e + i_\beta \cos\theta_e \tag{T.6}$$

$$v_d = v_\alpha \cos\theta_e + v_\beta \sin\theta_e \tag{T.7}$$

$$v_q = -v_\alpha \sin\theta_e + v_\beta \cos\theta_e \tag{T.8}$$

2.4 Inverse Park Transform

$$v_\alpha = v_d \cos\theta_e - v_q \sin\theta_e \tag{T.9}$$

$$v_\beta = v_d \sin\theta_e + v_q \cos\theta_e \tag{T.10}$$

3. IPMSM Mathematical Model — ODE Equations

3.1 Voltage Equations in the dq Frame

The salient-pole IPMSM voltage model retains the standard form, but with $L_d \neq L_q$:

$$v_d = R_s\, i_d + L_d \frac{di_d}{dt} - \omega_e\, L_q\, i_q \tag{E.1}$$

$$v_q = R_s\, i_q + L_q \frac{di_q}{dt} + \omega_e \big(L_d\, i_d + \lambda_m\big) \tag{E.2}$$

Rearranged as state equations:

$$\frac{di_d}{dt} = \frac{1}{L_d}\big[v_d - R_s\, i_d + \omega_e\, L_q\, i_q\big] \tag{E.3}$$

$$\frac{di_q}{dt} = \frac{1}{L_q}\big[v_q - R_s\, i_q - \omega_e\big(L_d\, i_d + \lambda_m\big)\big] \tag{E.4}$$

Symbol	Description	Unit
v_d, v_q	d/q-axis stator voltages	V
i_d, i_q	d/q-axis stator currents	A
R_s	Stator phase resistance	Ω
L_d	d-axis inductance ($L_d < L_q$)	H
L_q	q-axis inductance ($L_q > L_d$)	H
ω_e	Electrical angular velocity ($= \frac{P}{2}\omega_m$)	rad/s
λ_m	PM flux linkage	Wb
P	Number of rotor poles	—

3.2 Electromagnetic Torque — Full Salient-Pole Expression

For an IPMSM, **both** the magnet torque and the reluctance torque must be retained:

$$T_{\text{em}} = \frac{3}{2} \cdot \frac{P}{2} \Big[\underbrace{\lambda_m \, i_q}_{\text{magnet torque}} + \underbrace{(L_d - L_q) i_d \, i_q}_{\text{reluctance torque}} \Big] \tag{E.5}$$

Since $L_d < L_q$, the coefficient $(L_d - L_q)$ is *negative*. The reluctance torque is therefore maximised when $i_d < 0$. This is the physical reason why the MTPA operating point requires a negative d-axis current — it is not a demagnetisation fault.

3.3 Mechanical Equation of Motion

$$J \frac{d\omega_m}{dt} = T_{\text{em}} - T_L - B \, \omega_m \tag{E.6}$$

where J is the total moment of inertia ($\text{kg}\,\text{m}^2$), T_L is the load torque ($\text{N}\,\text{m}$), and B is the viscous friction coefficient ($\text{N}\,\text{m}\,\text{s}/\text{rad}$).

3.4 Rotor Angle ODE

$$\frac{d\theta_e}{dt} = \omega_e = \frac{P}{2} \, \omega_m \tag{E.7}$$

$$\theta_e(t) = \int_0^t \omega_e(\tau) \, d\tau + \theta_e(0) \tag{E.8}$$

3.5 Complete State-Space Representation

The IPMSM plant is a 3rd-order nonlinear system, $\mathbf{x} = [i_d, i_q, \omega_m]^\top$, $\mathbf{u} = [v_d, v_q]^\top$:

$$\dot{\mathbf{x}} = f(\mathbf{x}, \mathbf{u}) \tag{E.9}$$

$$\frac{di_d}{dt} = \frac{v_d - R_s i_d + \omega_e L_q i_q}{L_d}$$

$$\frac{di_q}{dt} = \frac{v_q - R_s i_q - \omega_e (L_d i_d + \lambda_m)}{L_q}$$

$$\frac{d\omega_m}{dt} = \frac{1}{J} \left[\frac{3}{2} \cdot \frac{P}{2} \big(\lambda_m i_q + (L_d - L_q) i_d i_q \big) - T_L - B\omega_m \right]$$

4. Operating Regions and Constraints

The IPMSM drive operates under two hard constraints that define distinct control regions:

$$i_d^2 + i_q^2 \leq I_{\max}^2 \quad \text{(current limit circle)} \tag{O.1}$$

$$v_d^2 + v_q^2 \leq V_{s,\max}^2 = \left(\frac{V_{\mathrm{DC}}}{\sqrt{3}}\right)^2 \quad \text{(voltage limit)} \tag{O.2}$$

In steady state (neglecting R_s), the voltage constraint forms an **ellipse** in the (i_d, i_q) plane that shrinks with increasing speed:

$$L_d^2\left(i_d + \frac{\lambda_m}{L_d}\right)^2 + L_q^2\, i_q^2 \leq \left(\frac{V_{s,\max}}{\omega_e}\right)^2 \tag{O.3}$$

Region	Description
$\omega_e \leq \omega_{\text{base}}$	**MTPA region**: current limit circle active; voltage ellipse not reached. Operate on MTPA locus to maximise torque per ampere.
$\omega_e > \omega_{\text{base}}$	**Field-weakening region**: voltage ellipse active; $i_{d,\text{ref}}$ is driven increasingly negative to reduce flux and remain within the voltage limit.
Deep FW	**MTPV region**: voltage ellipse shrinks close to the characteristic current $(-\lambda_m/L_d,\, 0)$; MTPV locus limits i_q to prevent instability.

5. Control Algorithm — Block Descriptions

5.1 Velocity Controller

The outermost loop is a PI controller comparing ω_{ref} with measured ω_m:

$$e_\omega(t) = \omega_{\text{ref}}(t) - \omega_m(t) \tag{C.1}$$

$$\frac{dx_\omega}{dt} = e_\omega(t) \tag{C.2}$$

$$T_{\text{ref}}(t) = K_{p,\omega}\, e_\omega + K_{i,\omega}\, x_\omega \tag{C.3}$$

5.2 Current Reference Generator — MTPA and Field Weakening

This block is the principal difference from SPMSM control. It outputs **both** $i_{d,\text{ref}}$ and $i_{q,\text{ref}}$ depending on the active operating region.

5.2.1 MTPA Trajectory ($\omega_e \leq \omega_{\text{base}}$)

The MTPA condition is derived by minimising the stator current magnitude $|\mathbf{i}_s|^2 = i_d^2 + i_q^2$ subject to constant torque. Differentiating (E.5) with respect to i_d and setting $\partial|\mathbf{i}_s|^2/\partial i_d = 0$ yields the MTPA locus:

$$i_{d,\text{MTPA}} = \frac{\lambda_m}{2(L_d - L_q)} - \sqrt{\left(\frac{\lambda_m}{2(L_d - L_q)}\right)^2 + i_q^2} \tag{C.4}$$

Given T_{ref}, the q-axis reference current is found by inverting (E.5):

$$i_{q,\text{ref}} = \frac{T_{\text{ref}}}{\frac{3}{2} \cdot \frac{P}{2}\left[\lambda_m + (L_d - L_q)\, i_{d,\text{MTPA}}\right]} \tag{C.5}$$

Equations (C.4) and (C.5) are solved iteratively or via an offline look-up table to yield the MTPA operating point ($i_{d,\text{ref}}$, $i_{q,\text{ref}}$).

Sign: On the MTPA locus, $i_{d,\text{ref}} < 0$ (demagnetising direction). This is correct and expected — it is not a fault condition.

5.2.2 Field Weakening ($\omega_e > \omega_{\text{base}}$)

When the back-EMF exceeds the available voltage, $i_{d,\text{ref}}$ is driven more negative via a closed-loop voltage-PI controller:

$$e_v(t) = V_{s,\max} - \sqrt{v_d^2 + v_q^2} \tag{C.6}$$

$$\frac{dx_v}{dt} = e_v(t) \tag{C.7}$$

$$i_{d,\text{FW}}(t) = K_{p,v}\, e_v + K_{i,v}\, x_v \tag{C.8}$$

$$i_{d,\text{ref}}(t) = \max\big(i_{d,\text{MTPA}},\ i_{d,\text{FW}}\big), \quad i_{d,\text{ref}} \geq -\frac{\lambda_m}{L_d} \tag{C.9}$$

The lower bound $-\lambda_m/L_d$ is the *characteristic current*; exceeding it may cause loss of current controllability.

5.2.3 Maximum Torque Per Voltage (MTPV) Limiter

Deep in field weakening, the MTPV constraint limits i_q to keep the operating point inside the shrinking voltage ellipse. The MTPV locus condition is:

$$\frac{\partial T_{\text{em}}}{\partial i_d} \Big/ \frac{\partial T_{\text{em}}}{\partial i_q} = \frac{L_d^2\big(i_d + \lambda_m/L_d\big)}{L_q^2\, i_q} \quad \Rightarrow \quad i_{q,\text{MTPV}} = \frac{-L_d(i_d + \lambda_m/L_d)}{L_q} \tag{C.10}$$

In implementation: $i_{q,\text{ref}} \leftarrow \min\big(i_{q,\text{ref}},\, i_{q,\text{MTPV}}\big)$.

5.3 Current Controller — Inner Loop

Two decoupled PI controllers with full cross-coupling feed-forward compensation (valid for both MTPA and FW regions):

5.3.1 d-Axis Current PI Controller

$$e_d(t) = i_{d,\text{ref}}(t) - i_d(t) \tag{C.11}$$

$$\frac{dx_d}{dt} = e_d(t) \tag{C.12}$$

$$v_d(t) = K_{p,d}\, e_d + K_{i,d}\, x_d \underbrace{-\, \omega_e\, L_q\, i_q}_{\text{cross-coupling FF}} \tag{C.13}$$

5.3.2 q-Axis Current PI Controller

$$e_q(t) = i_{q,\text{ref}}(t) - i_q(t) \tag{C.14}$$

$$\frac{dx_q}{dt} = e_q(t) \tag{C.15}$$

$$v_q(t) = K_{p,q}\, e_q + K_{i,q}\, x_q + \underbrace{\omega_e\big(L_d\, i_d + \lambda_m\big)}_{\text{cross-coupling FF}} \tag{C.16}$$

The feed-forward terms decouple the d and q axes. Without them, back-EMF cross-coupling ($\omega_e L_q i_q$ and $\omega_e(L_d i_d + \lambda_m)$) would appear as disturbances — a severe problem at high speed where ω_e is large.

5.4 $dq \to abc$ Inverse Transform Block

Step 1 — Inverse Park (T.9–T.10): $(v_d, v_q) \to (v_\alpha, v_\beta)$

Step 2 — Inverse Clarke:

$$v_{a,\text{ref}} = v_\alpha \tag{C.17}$$

$$v_{b,\text{ref}} = -\tfrac{1}{2} v_\alpha + \tfrac{\sqrt{3}}{2} v_\beta \tag{C.18}$$

$$v_{c,\text{ref}} = -\tfrac{1}{2} v_\alpha - \tfrac{\sqrt{3}}{2} v_\beta \tag{C.19}$$

5.5 PWM Generator

$$d_x(t) = \frac{1}{2} + \frac{v_{x,\mathrm{ref}}(t)}{V_{\mathrm{DC}}}, \quad x \in \{a, b, c\} \tag{C.20}$$

$$G_{xH} = 1 \ \text{ when carrier} < d_x(t) \quad \text{(high-side ON)} \tag{C.21}$$

$$G_{xL} = 1 \ \text{ when carrier} > d_x(t) \quad \text{(low-side ON)} \tag{C.22}$$

5.6 Power Converter (Three-Phase Inverter)

$$v_x = \frac{V_{\mathrm{DC}}}{2} S_x, \qquad x \in \{a, b, c\}, \quad S_x \in \{+1, -1\} \tag{C.23}$$

5.7 Position Sensor Signal Processing

$$\omega_m(t) = \frac{d\theta_m}{dt} = \frac{2}{P} \frac{d\theta_e}{dt} \tag{C.24}$$

- Decodes sensor signal (encoder / resolver / sensorless observer) to θ_e
- Differentiates θ_e to compute ω_m for speed feedback
- Applies low-pass filter or PLL to suppress noise

5.8 Protection and Auxiliary Functions

- **Over-current:** trips if $\sqrt{i_d^2 + i_q^2} > I_{\max}$
- **Over-voltage:** monitors V_{DC} against thresholds
- **Field-weakening supervisor:** activates FW PI (C.6–C.9) when $\omega_e > \omega_{\mathrm{base}}$
- **MTPV limiter:** clamps $i_{q,\mathrm{ref}}$ on the MTPV locus (C.10) in deep FW
- **Current circle limiter:** projects $(i_{d,\mathrm{ref}}, i_{q,\mathrm{ref}})$ onto $I_{\max}$ circle if violated
- **Anti-windup:** back-calculation on all PI integrators (see Section 7)
- **Fault state machine:** safe shutdown sequencing on any active fault

6. Complete Closed-Loop Signal Flow

#	Block	Key Equation / Action
1	Speed Controller	$T_{\text{ref}} = K_{p,\omega}(\omega_{\text{ref}} - \omega_m) + K_{i,\omega} x_\omega$
2a	Current Ref. (MTPA)	Solve (C.4)–(C.5): output $(i_{d,\text{MTPA}},\ i_{q,\text{ref}})$
2b	Current Ref. (FW)	If $\omega_e > \omega_{\text{base}}$: compute $i_{d,\text{FW}}$ via (C.6)–(C.9)
2c	MTPV Limiter	Clamp $i_{q,\text{ref}}$ per (C.10) in deep FW
3	d-axis Current PI	$v_d = K_{p,d} e_d + K_{i,d} x_d - \omega_e L_q i_q$
4	q-axis Current PI	$v_q = K_{p,q} e_q + K_{i,q} x_q + \omega_e (L_d i_d + \lambda_m)$
5	Inverse Park	$v_\alpha = v_d \cos\theta_e - v_q \sin\theta_e$
6	Inverse Clarke	$v_a = v_\alpha;\ v_b = -\frac{v_\alpha}{2} + \frac{\sqrt{3} v_\beta}{2};\ \ldots$
7	PWM Gen.	$d_x = \frac{1}{2} + v_{x,\text{ref}}/V_{\text{DC}}$
8	Power Converter	$v_x = \frac{V_{\text{DC}}}{2} S_x$
9	IPMSM Plant	$\dot{i}_d, \dot{i}_q, \dot{\omega}_m = f(v_d, v_q, i_d, i_q, \omega_e)$ per (E.3)–(E.6)
10	Clarke + Park (FB)	$i_{\alpha,\beta} \to i_d, i_q$ (feedback to steps 3,4)
11	Position Processing	$\omega_m = d\theta_m/dt$ (feedback to step 1)

7. Controller Tuning Guidelines

7.1 Current Loop — IMC Pole-Zero Cancellation

$$\omega_{c,\text{current}} \gg \omega_{c,\text{speed}} \qquad \text{(typically } 10\times\text{–}30\times\text{)} \tag{D.1}$$

PI gains from cancellation of the dominant motor pole (R_s/L_d and R_s/L_q respectively):

$$K_{p,d} = L_d\,\omega_{c,d}, \qquad K_{i,d} = R_s\,\omega_{c,d} \tag{D.2}$$

$$K_{p,q} = L_q\,\omega_{c,q}, \qquad K_{i,q} = R_s\,\omega_{c,q} \tag{D.3}$$

Because $L_d \neq L_q$, the two proportional gains differ — this is correct and expected.

7.2 Speed Loop Bandwidth

The linearised torque gain at the MTPA operating point (i_d^*, i_q^*) is:

$$K_T = \frac{3}{2} \cdot \frac{P}{2} \left[\lambda_m + 2(L_d - L_q)\, i_d^* \right] \tag{D.4}$$

Speed PI gains:

$$K_{p,\omega} = \frac{J\, \omega_{c,\omega}}{K_T} \tag{D.5}$$

$$K_{i,\omega} = \frac{\omega_{c,\omega}^2\, J}{2\zeta\, K_T} \tag{D.6}$$

7.3 Field-Weakening PI Tuning

The FW voltage PI acts on a timescale at or slower than the speed loop:

$$K_{p,v} \approx \frac{1}{\omega_e\, L_d}, \qquad K_{i,v} \approx \frac{R_s}{\omega_e\, L_d^2} \tag{D.7}$$

7.4 Anti-Windup

Back-calculation anti-windup is applied to all PI integrators (x_ω, x_d, x_q, x_v):

$$\frac{dx}{dt} = e(t) + \frac{1}{T_{\text{aw}}} \left(u_{\text{sat}} - u_{\text{unsat}} \right) \tag{D.8}$$

8. Notation and Glossary

Symbol	Full Name	Description
θ_e	Electrical rotor angle	Rotor flux angle in electrical radians
ω_m	Mechanical angular velocity	Rotor speed in rad/s
ω_e	Electrical angular velocity	$\omega_e = \frac{P}{2}\omega_m$
ω_{base}	Base speed	Transition speed between MTPA and FW
ω_{ref}	Reference speed	Commanded speed setpoint
T_{ref}	Reference torque	Output of speed controller
i_d, i_q	dq-frame currents	DC at steady state; $i_d < 0$ in MTPA/FW
v_d, v_q	dq-frame voltages	Controller output voltages
L_d, L_q	d/q-axis inductances	$L_d < L_q$ — saliency condition
$\xi = L_q/L_d$	Saliency ratio	Typically 2–6 for IPMSM
λ_m	PM flux linkage	Flux produced by buried magnets
$I_{\max}$	Maximum stator current	Thermal / inverter current limit
$V_{s,\max}$	Max. stator voltage	$= V_{\text{DC}}/\sqrt{3}$ for SVPWM
K_T	Torque constant (MTPA)	Linearised torque gain at MTPA point
V_{DC}	DC bus voltage	HV supply input to inverter
G_{xH}, G_{xL}	Gate pulses	PWM signals for high/low switches
P	Pole count	Number of rotor magnetic poles
K_p, K_i	PI gains	Proportional and integral coefficients