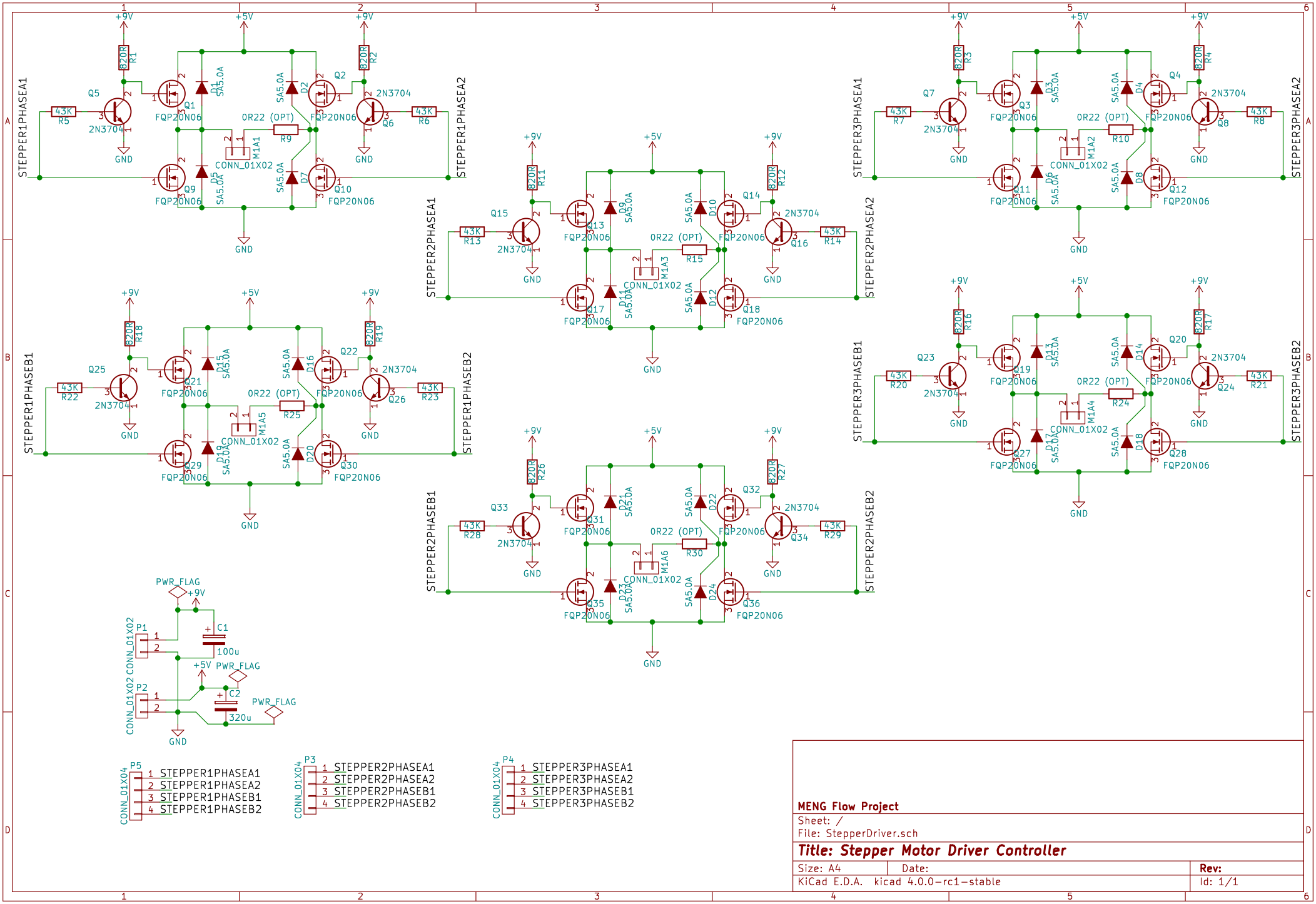

MENG Flow Project

Sheet: /

File: StepperDriver.sch

Title: Stepper Motor Driver Controller

Size: A4	Date:	**Rev:**
KiCad E.D.A. kicad 4.0.0-rc1-stable		Id: 1/1