IO

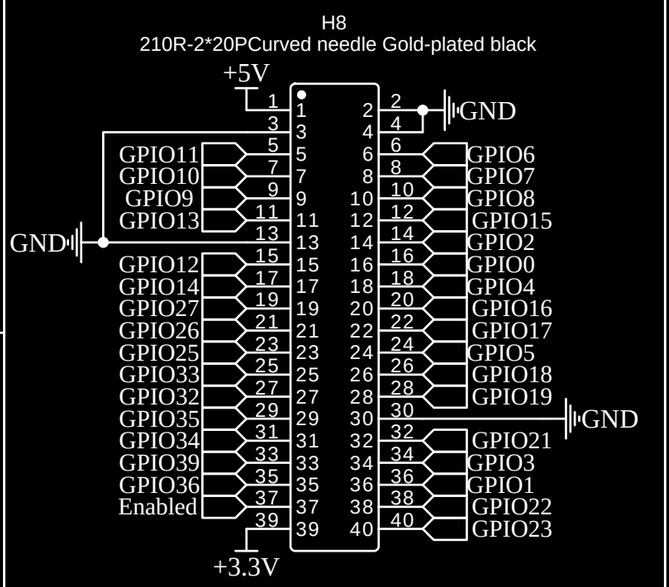

Microcontroler

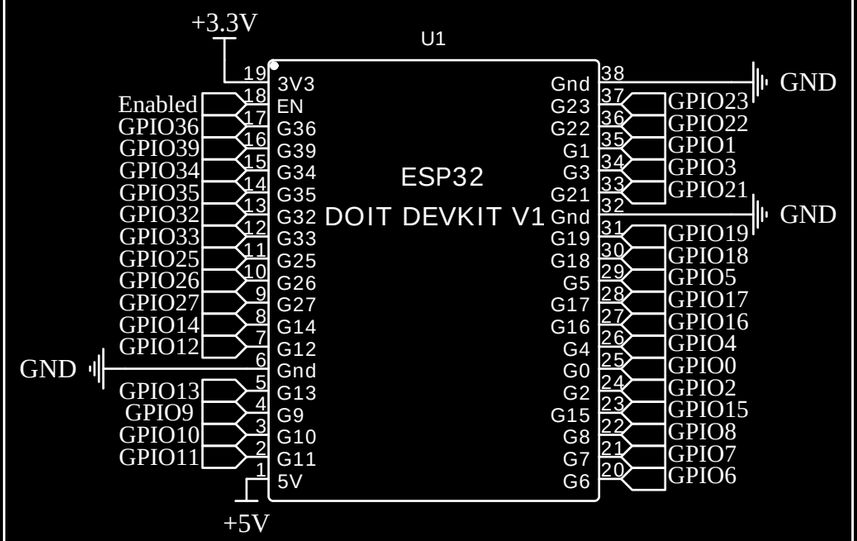

SD Slot

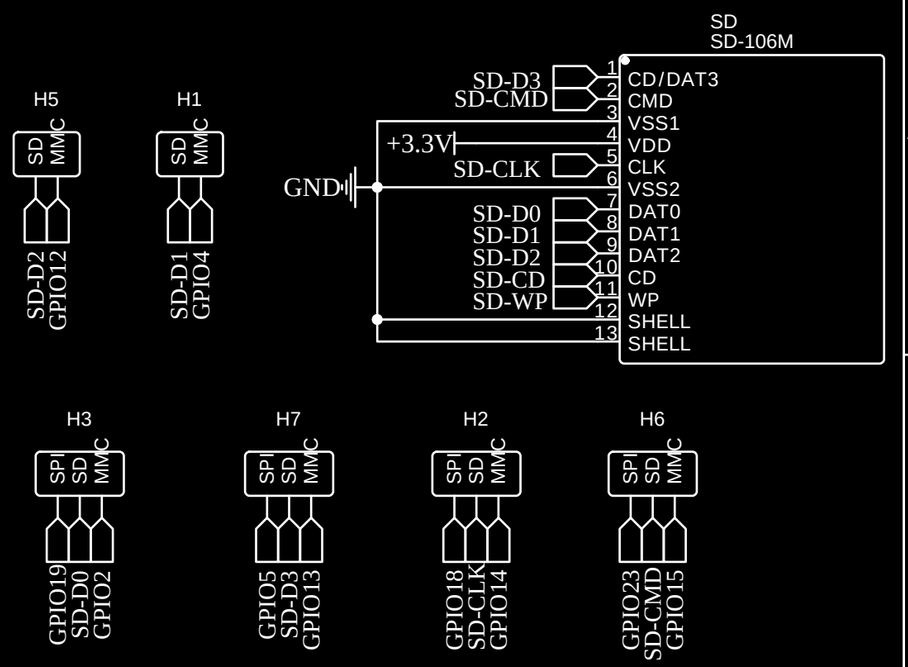

JTAG Probe Header

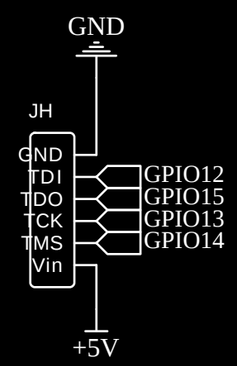

Power Button

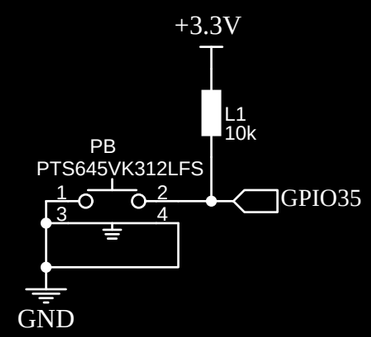

Jack Connector

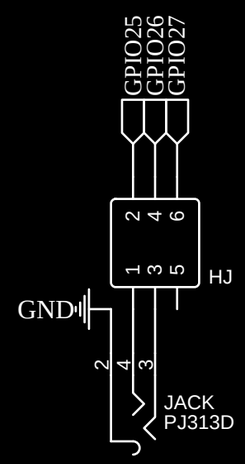

Battery Header

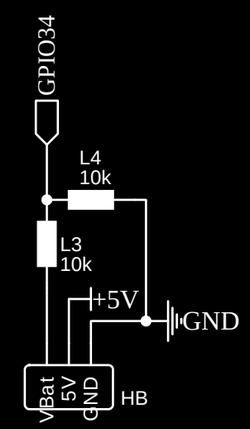

Display Header

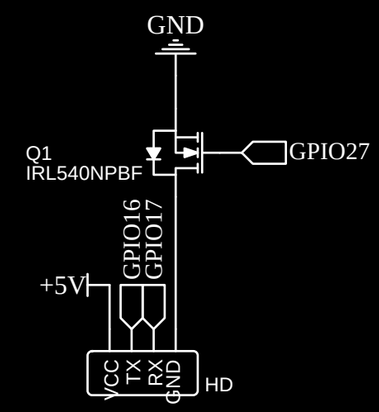

TITLE: Xila - Main Board

REV: 1.1

Company: Alix Fait Grr

Sheet: 1/1

Date: 09/04/2021

Drawn By: Alix ANNERAUD