DS connected to microcontroller pin 12	shift register clock connected to microcontroller pin 9
latchclockpin1 connected to microcontroller pin 11	latchclockpin2 connected to microcontroller pin 10

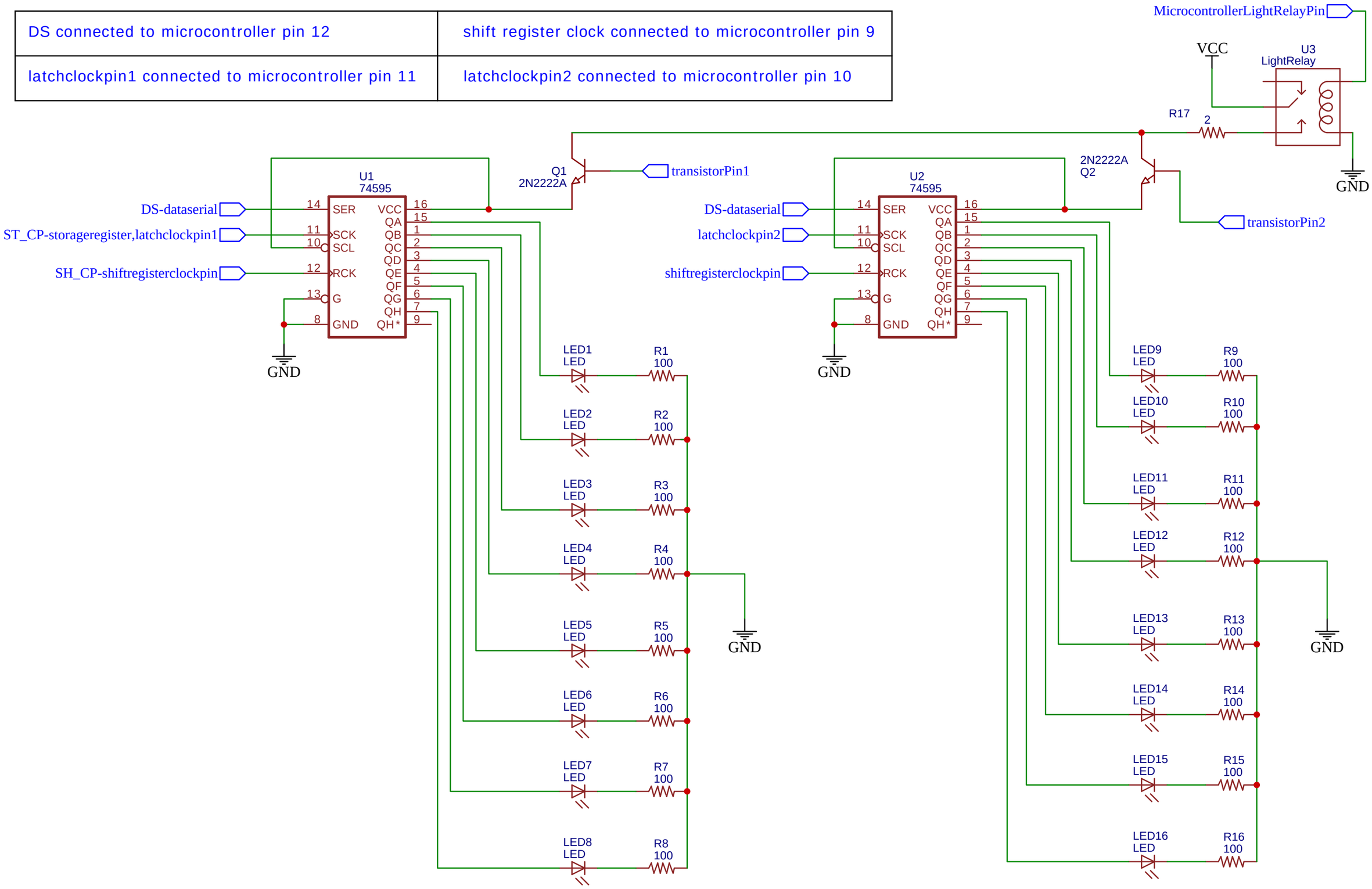

transistorPin1 connected to microcontroller pin 8
transistorPin2 connected to microcontroller pin 17

TITLE: Enhanced Light System for ITS-EM		REV: 1.0
EasyEDA	Company:	Sheet: 1/1
	Date: 2024-04-18 Drawn By: Ali Yehia	