Wearer Verification and Identity Attribution Using Smartwatch Data

Aljawhara Albawardi
College of Computer Science and Information Technology
imam abdulrahman bin faisal university
Dammam, Saudi Arabia
2230006163@iau.edu.sa

Raneem Alhajri
College of Computer Science and Information Technology
imam abdulrahman bin faisal university
Dammam , Saudi Arabia
2230005322@iau.edu.sa

Dai Almansour
College of Computer Science and Information Technology
imam abdulrahman bin faisal university
Dammam, Saudi Arabia
2230005082@iau.edu.sa

Khira alahmady
College of Computer Science and Information Technology
imam abdulrahman bin faisal university
Dammam , Saudi Arabia
2230007461@iau.edu.sa

Rana Alrasheed
College of Computer Science and Information Technology
imam abdulrahman bin faisal university
Dammam , Saudi Arabia
2230005894@iau.edu.sa

***Abstract*—This project investigates whether smartwatch sensor data can reliably determine if a device was worn by its legitimate owner or temporarily used by another individual. Using the WristSense dataset, which contains multimodal physiological and behavioral signals collected from Huawei Fit 2 smartwatches, the study evaluates the feasibility of wearer verification for forensic identity attribution. The dataset includes heart rate, stress indicators, accelerometer-based motion patterns, sleep metrics, and additional contextual signals that represent user-specific physiological and behavioral rhythms. By extracting biometric markers such as heart-rate variability and motion-gait signatures and comparing them with each participant's established baseline, the system assesses whether a disputed time interval aligns with the known wearer patterns. This methodology directly supports forensic scenarios in which individuals claim that another person used their smartwatch. The results indicate that smartwatch-derived signals show strong potential for distinguishing between different wearers, offering an evidence-based mechanism for supporting or challenging identity-related claims in digital investigations.**

Keywords—Wearable forensics, smartwatch biometrics, identity attribution, wearer verification, behavioral signals, physiological signals.

I. INTRODUCTION

Smartwatches today do a lot more than just show the time they can track our heart rate, movements, stress levels, and even how we sleep. Research has shown that the data they collect can reveal unique patterns about each person [1], [2]. Despite this, not much has been done to see if smartwatch data could be used in forensics, for example, to check if the watch was really worn by its owner.

This project explores whether we can use signals from smartwatches like heart rate, heart-rate variability, stress levels, blood oxygen, and sleep patterns to verify who's wearing the device. Using machine-learning tools, we look at whether these patterns are distinct enough to tell the actual owner apart from someone else, which could help advance the use of wearable devices in forensic investigations [3], [4].

II. BACKGROUND & LITERATURE REVIEW

A. Biometric and Behavioral Authentication Overview

Biometric authentication is based on distinctive behavioral and physiological traits. Heart rate, HRV, oxygen saturation, and stress levels are examples of physiological cues that function as powerful identity markers [5]. Wrist movements, daily activity patterns, and sleep patterns are examples of behavioral biometrics that offer more

©2025 IEEE

individuality [6]. Biometric technologies, in contrast to PINs or passwords, allow for passive and continuous verification, which is perfect for wearables that gather multidimensional data all day long .

B. Previous Smartwatch-Based Identification Research

User identification has made extensive use of smartwatch data. Strong user discrimination is made possible by motion-based signatures obtained by accelerometer and gyroscope sensors [6], and deep learning models like CNNs and ResNet accurately extract intricate behavioral patterns [7]. Single-sensor methods are regularly outperformed by multi-modal systems that incorporate motion and physiological features [8],[9].

There are still a few gaps, though. Instead of using data from the real world, many studies rely on controlled environments [3]. Stress response patterns are still understudied [10], and highly unique traits like sleep measurements are rarely used [11]. The majority of study concentrates on confirming the device's legitimate wearer, paying little attention to determining which other users used it [2]. These restrictions demonstrate why the current project is necessary.

C. Forensic Relevance of Wearable Devices

Wearable technology is useful in forensic investigations since it continuously captures physiological and behavioral data (heart rate, sleep, stress, oxygen saturation). Previous research demonstrates their value in confirming or refuting suspicious statements [1], particularly when an individual disputes wearing the device at a certain time. By examining user-specific patterns, a biometric identity attribution model can assist in identifying the actual wearer. This study uses more than forty physiological, behavioral, and psychological characteristics to categorize people in accordance with forensic requirements.

D. WristSense-Style Dataset Overview and Research Gaps

A wide range of multimodal biometric signals from the physiological, behavioral, and psychological domains are integrated into the dataset used in this study. Heart rate and HRV metrics, stress indicators, blood oxygen measurements, specific sleep architecture factors, and interpersonal psychological qualities (Q and FQ assessments) are all included. A distinctively rich feature set that is rarely combined into a single model is produced by this combination.

Putting this dataset in the backdrop demonstrates how our work is different from previous research, which usually relied on sparse or single-modality data and was primarily concerned with confirming the authenticity of smartwatches rather than identifying the wearer. This gap highlights the need for a more thorough machine-learning strategy for multi-class identity attribution, which the current study achieves with its deep learning architecture.

E. Features That Differentiate Users

In this study, a number of dataset factors that clearly show between user variances are what drive reliable user identification. While stress response levels (MaxStress, MinStress, AverageStress) differ significantly between people [11], heart-rhythm patterns (SDNN, SDRR) reflect unique autonomic characteristics [5]. Strong personal distinctiveness is also shown by sleep-architecture features including DeepSleepTime, LightSleepTime, AwakeTimes, SleepEfficiency, and SleepScore [10]. Further distinguishing characteristics between users are oxygen-saturation patterns (MaxBloodOxygen,MinBloodOxygen,avgSaturation,lastSaturation) and psychological aggressiveness features (Q and FQ measures: Physical, Verbal, Anger, Hostility).

By utilizing these combined multimodal data, the deep neural network was able to identify smartwatch wearers with an accuracy of about 88.7%, showing great promise for practical and dependable forensics.

III. Problem Definition

The ongoing physiological, behavioral, and psychological data that smartwatches generate can be useful for security and forensic analysis. However, most current research focuses solely on wearer verification, i.e., identifying whether the current wearer is the legitimate owner. This is insufficient in real world forensic scenarios when a defendant may claim that someone else used the device or denies wearing it. The primary issue in these circumstances is identifying the exact wearer of the smartwatch via biometric data.

The capacity of current authentication models to differentiate between different people is limited since they frequently rely on restricted features, controlled surroundings, or single modality inputs (such heart rate alone). By investigating whether multimodal smartwatch features, such as physiological signals (heart rate, HRV, oxygen saturation), behavioral indicators (sleep structure), and psychological traits (aggression measures), can support accurate multi-class identity attribution in place of straightforward binary verification, this project seeks to close this gap.

A. Definition of Wearer Verification and Identity Attribution

Wearer verification is a binary process that establishes whether the wearer of the smartwatch is an actual registered user (owner vs. not owner). Identity attribution, on the other hand, is a more sophisticated and forensic-focused process that pinpoints the precise person wearing the device when the wearer is not the owner. This necessitates assessing each potential user's distinct biometric signature in order to differentiate between them.

B. Project Hypotheses

1) Compared to single-modality signals, multimodal wristwatch features which include physiological measures (heart rate, HRV, oxygen saturation), behavioral indicators (sleep architecture), and psychological qualities (aggression scores) offer noticeably stronger user individuality.

2) Beyond binary wearer verification, a deep neural network trained on these multimodal signals can accurately conduct multi-class identification attribution.

3) Beyond conventional physiological signs, sleep structure and psychological characteristics provide quantifiable extra discriminative value.

C. Main Research Questions

1) In practical forensic situations, can multimodal smartwatch data successfully differentiate between several users?

2) Which physiological, behavioral, and psychological feature groups are most important for accurate identity attribution?

3) In comparison to conventional single-modality authentication techniques, how does a deep neural network perform?

4) Instead of just verifying a claimed identification, can smartwatch data accurately identify the person who really wore the device?

IV. Dataset Description

The dataset for this study is a precise compilation of 310 daily records collected from wearable wristwatch technology, spanning 40 variables across physiological, behavioral, and demographic domains, with its integrity confirmed by 100% completeness (no missing values). Each record is uniquely tied to a participant through the DB_Case attribute and includes categorical demographic and status variables (Gender, Age Group, Employment Status, Marital Status) encoded as integers.

The core physiological component details heart rate dynamics, featuring maximum, minimum, and average resting heart rate alongside essential Heart Rate Variability (HRV) indicators like SDNN and SDRR, which are critical clinical-grade proxies for autonomic nervous system activity. Stress is monitored via maximum, minimum, and average stress levels, key indicators of mental load, which are likely obtained from electrodermal activity (EDA) or proprietary algorithms. Respiratory function is also captured using blood oxygenation markers (SpO_2), including maximum, minimum, and average saturation.

Furthermore, the data robustly assesses sleep architecture, providing metrics such as total sleep time, deep and light sleep parts, awake times, sleep efficiency, snore frequency, and overall sleep score, all reflecting daily recovery patterns. Finally, behavioral assessment is woven through the Q and FQ scales, which quantify self reported levels of the emotional and interpersonal factors of physical aggression, verbal aggression, anger, and hostility.

V. Data Preprocessing

The preprocessing pipeline was designed to ensure data integrity and prepare the smartwatch dataset for supervised classification. The initial phase focused on isolating meaningful features and creating a clean, numerically consistent dataset. Non informative attributes, such as the TimeStamp field, Age Group, Employment Status, and Marital Status were excluded because they represent temporal metadata rather than useful physiological information and could introduce bias. A completeness check confirmed the absence of missing values, eliminating the need for imputation. Categorical participant identifiers were encoded into numerical labels using a standard label encoder, enabling the identity classes to be processed by machine learning algorithms.

Subsequently, all numerical features, including physiological, sleep, and behavioral variables, were standardized using z-score normalization. This step ensures that variations in the scale of different features do not disproportionately influence model learning [12]. The dataset was then partitioned into training and testing subsets using an 80/20 stratified split, preserving proportional representation of each participant in both sets and providing an unbiased evaluation sample for assessing model generalization [12].

To address class imbalance, which arises due to unequal temporal coverage per participant, inverse class weighting was applied, a widely accepted method in imbalanced learning [13]. Class weights were calculated inversely proportional to the number of samples per class using the formula:

$$W_j = \frac{N_{samples}}{N_{classes} \times N_{samples,j}} \tag{1}$$

These weights were incorporated into the model's loss function during training, ensuring that misclassifications of underrepresented participants are penalized more heavily. This strategy compels the model to allocate sufficient discriminative power to minority classes, preventing the learning process from being dominated by majority classes.

Overall, this preprocessing workflow establishes a robust, numerically stable, and statistically balanced foundation, rendering the dataset well-prepared for forensic wearer verification tasks.

VI. Machine Learning Method

The computational methodology implemented for wearer verification and identity attribution is described in this section. The method is based on a deep learning classification model that is tested against widely used baseline classifiers and backed up by a strict training schedule.

A. Data Partitioning and Feature Scaling

The dataset was carefully divided to guarantee the models' generalizability and stop data leaking. Using a stratified split approach, we assigned 20% of the data for testing and the rest 80% for training. For fair evaluation in multi-class forensic attribution, stratification was required to avoid the same proportionate representation of all 39 subjects (*DB_Case*) in both the training and evaluation sets.

Before model ingestion, feature scaling was applied using the Standard Scaler. The feature set (X) is standardized in this normalization stage so that each feature has a mean of 0 and a standard deviation of

$$Z = \frac{\chi - \mu}{\sigma} \tag{2}$$

By excluding characteristics with substantially larger sizes from influencing the optimization process, this process is critical for the stability and faster convergence of the Neural Network.

B. Deep Neural Network (DNN) Architecture

Using the Keras framework, a Feed Forward Artificial Neural Network (ANN) serves as the main classifier. The model is designed for the challenging task of identity attribution, mapping the 34 dimensional feature vector to one of the 39 unique wearer identities [14].

The architecture is a Multi-Layer Perceptron (MLP) constructed as follows (Fig. 1):

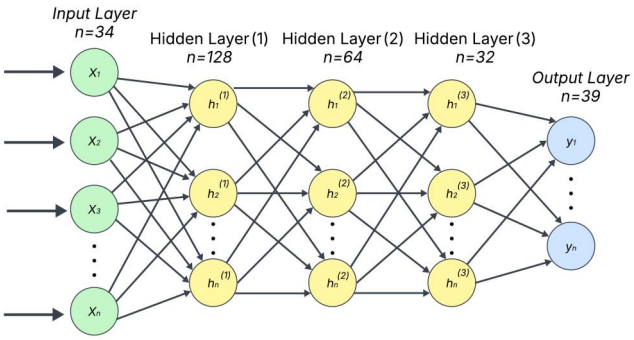

Fig. 1. The architecture of the proposed five layer Feedforward Neural Network (FNN) for identity attribution. The model maps 34 engineered features to 39 unique user identities.

1) Input Layer: Accepts the standardized feature vector (n=34) containing physiological and behavioral metrics.

2) Hidden Layers: To extract intricate patterns, the network is composed of three fully linked (Dense) layers with progressive downsizing: 128, 64, and 32 neurons, respectively. These layers employ the ReLU (Rectified Linear Unit) activation function to introduce non linearity. A Dropout layer (20%) is incorporated after the first hidden layer to regularize the model and mitigate overfitting by randomly setting a fraction of input units to zero during training.

3) Output Layer: This layer contains 39 neurons (one for each subject) and uses the Softmax activation function. The network's raw scores are transformed by the Softmax function into a probability distribution (y), where the projected wearer identity is indicated by the element with the highest probability.

C. Training Strategy and Optimization

The model training process was optimized using several training procedures common for utilizing deep learning to ensure robust, unbiased learning:

1) Loss Function and Optimizer: The model minimized the Sparse Categorical Cross Entropy loss, which is appropriate when the target labels are integer encoded, as is typically the case after Label Encoding the DB_Case column. The Adam optimizer, which is known for its effectiveness and favorable convergence characteristics, was used [15].

2) Dynamic Callbacks: The following callbacks were employed to enhance generalization performance and stabilize training:

a) Adaptive Learning Rate: The validation loss was tracked by a ReduceLROnPlateau scheduler. If stagnation occurred for a patience window of 7 epochs, the learning rate was automatically reduced by a factor of 0.5.

b) Early Stopping: An EarlyStopping mechanism tracked the validation loss and terminated training if no improvement was observed over the span of 15 epochs. This prevents excessive training time and overfitting, with the best model weights being automatically restored.

VII. Results & Evaluation

The study's setup, validation approach, and metrics used to assess the suggested Deep Neural Network (DNN) model's performance are described in detail in this section. The evaluation is structured to assess the model's efficacy in two critical tasks: multi-class identity attribution and binary wearer verification.

A. Wearer Verification Formulation and Classification Setup

Although the developed model is trained for the multi-class task of identity attribution (identifying which user from the 39 available identities), its practical utility in a security system requires transformation into a binary decision for wearer verification (determining whether a claim of identity is true or false). The Owner vs. Non-Owner classification arrangement is used to accomplish this.

The model's confidence score ($\hat{y}_c$), which is created from the Softmax output layer, is used to verify a claimed identity ($_c$). Verification is deemed successful if the probability for the claimed user exceeds a pre-defined decision threshold (τ). Since this threshold's setting is crucial for controlling the trade-off between system accessibility (True Positive Rate) and security (False Acceptance Rate), the experimental evaluation concentrates on optimizing it. There are two probable outcomes:

1) Genuine User (Owner): The authentication attempt is made by the true owner.

2) Imposter (Non-Owner): The authentication attempt is made by any other user in the dataset.

B. Evaluation Metrics

Performance was assessed using a comprehensive suite of metrics tailored for both the security critical verification work and the high-dimensional attribution task.

1) Multi-Class Attribution Metrics: These metrics are derived from the model's raw multi-class predictions:

a) Accuracy: The overall percentage of accurate predictions across all 39 identities (Fig. 2).

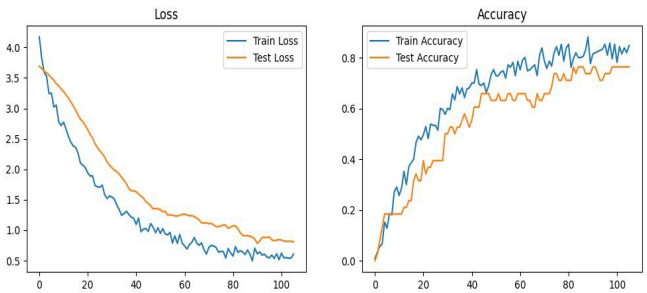

Fig. 2. Training and validation accuracy and loss curves for the DNN

b) Precision, Recall, and F1-Score: These are reported across all classes. Given the cost sensitive nature of the unbalanced dataset, the F1-Score (the harmonic mean of Precision and Recall) provides a balanced measure of the model's classification power.

c) Confusion Matrix: A key visualization displayed in a crucial graphic used to analyze the model's performance,

showing the precise counts of true positives, false positives, and false negatives for every user identity. This is particularly useful for identifying specific users that the model frequently confuses (Fig. 3).

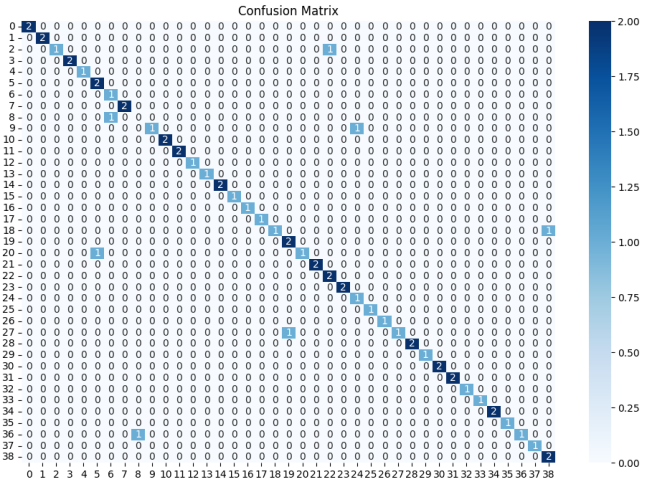

Fig. 3. The Confusion Matrix for the identity attribution task on the test set.

2) Verification Performance Metrics: These metrics are essential for assessing the model's feasibility in a security application:

a) False Acceptance Rate (FAR): The security critical measure, the likelihood that the system may mistakenly accept an Imposter (Non-Owner).

b) False Rejection Rate (FRR): The user experience measure, the likelihood that the system may mistakenly reject a Genuine User (Owner).

c) Receiver Operating Characteristic (ROC) Curve and Area Under the Curve (AUC): Throughout the whole range of decision thresholds (τ), the ROC curve visually plots the True Positive Rate (TPR) against the False Acceptance Rate (FAR). The AUC provides a single, threshold independent measure of the model's overall discriminative capacity for the binary verification task [16].

VIII. Experiments and Analysis

During the development of our model, we first tested three baseline classifiers Random Forest, K-Nearest Neighbors, and Support Vector Machine to compare how each handled the smartwatch features. These initial experiments showed clear differences in their performance and ability to capture biometric patterns. After evaluating these results, we proceeded to use the Deep Neural Network, which provided the most stable and accurate outcomes.

A. The Random Forest classifier

Produced a perfect accuracy of 100% when trained on the full set of physiological and behavioral smartwatch features. While the feature-importance scores highlighted meaningful biometric indicators, such flawless performance is methodologically implausible for a 39-class identification task and strongly suggests data leakage or overlap between training and testing samples. As emphasized by Acar and Aksu in wearable authentication systems, such results reflect memorization rather than genuine generalization capability [17], making this model unsuitable for any reliable forensic interpretation.

B. The K-Nearest Neighbors classifier

The K-Nearest Neighbors classifier demonstrated noticeably weaker performance, achieving an accuracy of approximately 50%. This low accuracy reflects the limitations of distance-based methods when dealing with biometric data that naturally exhibit overlap due to daily fluctuations in heart rate variability, stress responses, sleep patterns, and motion signals. Such variability, widely reported in smartwatch-based behavioral biometrics, makes KNN unable to separate users effectively [18].

C. The Support Vector Machine with an RBF kernel

Achieved a more realistic accuracy of around 84%. This performance aligns with previous findings showing that nonlinear models are better suited for capturing subtle distinctions between user specific physiological signatures compared to simpler classifiers. As such, the SVM provides a strong and credible baseline for comparison.

D. The Deep Neural Network

Used in this study showed the most stable and reliable performance among all evaluated models. With its layered architecture supported by batch normalization and dropout, the model was able to learn meaningful biometric patterns without overfitting. It achieved an accuracy of 89% with balanced predictions across all 39 users. This behavior is clearly reflected in the loss and accuracy curves (Fig. 2), which display smooth convergence and consistent separation between training and testing performance. In contrast to the unrealistic 100% accuracy produced by the Random Forest classifier, the DNN provides a more credible and scientifically grounded representation of smartwatch biometric variability, making it the most dependable and forensically meaningful model in this analysis.

IX. Forensic Interpretation

The classification results obtained in this study provide practical value in forensic scenarios where an individual disputes wearing a smartwatch at a specific time. By comparing the biometric and behavioral patterns recorded during the questioned interval with each participant's established profile, the model can support or challenge a suspect's claim. If the observed signals align strongly with the known physiological and behavioral characteristics of a particular user, such as heart-rate dynamics, stress-response patterns, and sleep or activity rhythms, the evidence suggests that the device was worn by that individual.

Conversely, significant deviations may indicate that another person was wearing the device at that time. The strength of this approach is grounded in the individuality of multimodal smartwatch signals, which previous research has shown to be distinctive across users [17], [18]. The Deep Neural Network's balanced performance across all 39 identities further enhances its suitability for forensic analysis, as consistent predictions increase confidence in wearer attribution.

However, while the model provides valuable supportive evidence, it cannot serve as definitive proof on its own.

Biometric signals naturally vary due to stress, physical exertion, emotional state, and environmental factors, and these variations introduce uncertainty into forensic interpretation. Therefore, the results should be integrated with additional investigative elements such as physical evidence, witness accounts, or device usage metadata to ensure accurate and legally defensible conclusions.

X. Conclusion

This study demonstrates that multimodal smartwatch data can provide discriminative physiological and behavioral patterns that support wearer verification, aligning with prior work on smartwatch based biometric identification [1], [3]. Physiological indicators such as heart rate variability, stress measurements, and sleep related features showed meaningful potential for distinguishing individuals in forensic identity attribution contexts.

Despite these promising findings, the study is subject to several limitations. The dataset is relatively small, which may limit the generalizability of the results an issue similarly noted in earlier wearable biometric research [2]. Additionally, the limited availability of strictly biometric measurements within the dataset introduced another methodological constraint. Because the biometric features alone were insufficient to support effective classification, it became necessary to incorporate behavioral features such as emotional and lifestyle related indicators to ensure adequate feature richness for model training. While these behavioral attributes improved performance, they do not represent pure biometric signals and would ideally be avoided in a strictly biometric based verification framework.

Future research should aim to address these limitations by expanding the dataset, incorporating more diverse biometric measurements, and evaluating models that rely primarily on physiological biometrics. Such improvements would reduce dependence on behavioral features and strengthen the forensic reliability of smartwatch based identity attribution [4].

Acknowledgment

The authors extend their sincere gratitude to Dr. Norah Almubairik for her valuable guidance, encouragement, and constructive feedback throughout this research, as well as for her essential contribution in developing the WristSense dataset utilized in this study, the authors also wish to thank their Peers and friends in the Artificial Intelligence major for their generous technical assistance and supportive contributions which were instrumental in the successful completion of this work. .

References

[1] L. Fan, H. Qi, and A. K. Dey, "Identifying Users from Smartwatch Sensor Data," Proc. ACM IMWUT, vol. 1, no. 4, pp. 1–27, 2017.

[2] A. Seneviratne, Y. Hu, M. Nguyen, J. Kang, and A. Seneviratne, "A Survey of Wearable Devices and Challenges," IEEE Communications Surveys & Tutorials, vol. 19, no. 4, pp. 2573–2620, 2017.

[3] M. N. A. Rahman, S. H. Chauhdary, and Y. Chen, "Smartwatch-based Biometric Identification Using Motion Sensors," in IEEE International Conference on Identity, Security and Behavior Analysis (ISBA), 2020.

[4] P. Kumar, A. Bansal, and R. Shorey, "User Authentication Using Behavioral Biometrics from Smart Wearable Devices," IEEE Transactions on Biometrics, Behavior, and Identity Science, vol. 3, no. 1, pp. 14–26, 2021.

[5] S. Kwapisz, G. Weiss, and S. Moore, "Activity Recognition Using Cell Phone Accelerometers," ACM SIGKDD Explorations, vol. 12, no. 2, pp. 74–82, 2010.

[6] M. Derawi, C. Nickel, and C. Busch, "Unobtrusive User-Authentication on Mobile Phones Using Biometric Gait Recognition," IEEE Symposium on Security and Privacy Workshops, 2010.

[7] R. Teh, N. Zhang, K. Liu, and Y. Sun, "Deep Residual Network for Smartwatch-Based User Identification Through Complex Hand Movements," Sensors, vol. 22, no. 5, 2022.

[8] S. N. Patel and M. Abowd, "Detecting Stress from Physiological Sensor Data Using Machine Learning Models," ACM Digital Health, 2020.

[9] A. Alharbi and B. Soh, "Forensic Analysis of Wearable Devices: Wearable Data as Digital Evidence," Digital Investigation, vol. 28, pp. S90–S98, 2019.

[10] A. Molina-Markham et al., "Am I Wearing Your Fitbit? Privacy and Security Issues in Wearable Sensor Systems," ACM HotSec, 2012.

[11] C. Ellis, N. Debie, and S. Spencer, "Is Your Smartband Smart Enough to Know Who You Are? Continuous Physiological Authentication in the Wild," Proc. ACM IMWUT, 2019.

[12] S. Raschka and V. Mirjalili, Python Machine Learning, 3rd ed. Birmingham, U.K.: Packt Publishing, 2019

[13] H. He and E. Garcia, "Learning from imbalanced data," IEEE Trans. Knowledge and Data Engineering, vol. 21, no. 9, pp. 1263–1284, Sept. 2009.

[14] I. Goodfellow, Y. Bengio, and A. Courville, Deep Learning. Cambridge, MA, USA: MIT Press, 2016.

[15] D. P. Kingma and J. Ba, "Adam: A method for stochastic optimization," presented at the Int. Conf. on Learning Representations (ICLR), San Diego, CA, USA, May 7–9, 2015.

[16] T. Fawcett, "An introduction to ROC analysis," *Pattern Recognit. Lett.*, vol. 27, no. 8, pp. 861–874, Jun. 2006. doi: 10.1016/j.patrec.2005.10.010.

[17] A. Acar and H. Aksu, "A Usable and Robust Continuous Authentication Framework Using Wearables," 2021.

[18] R. Srinivasan et al., "Data-Driven Behavioural Biometrics for Continuous and Adaptive User Verification Using Smartphone and Smartwatch," 2022.