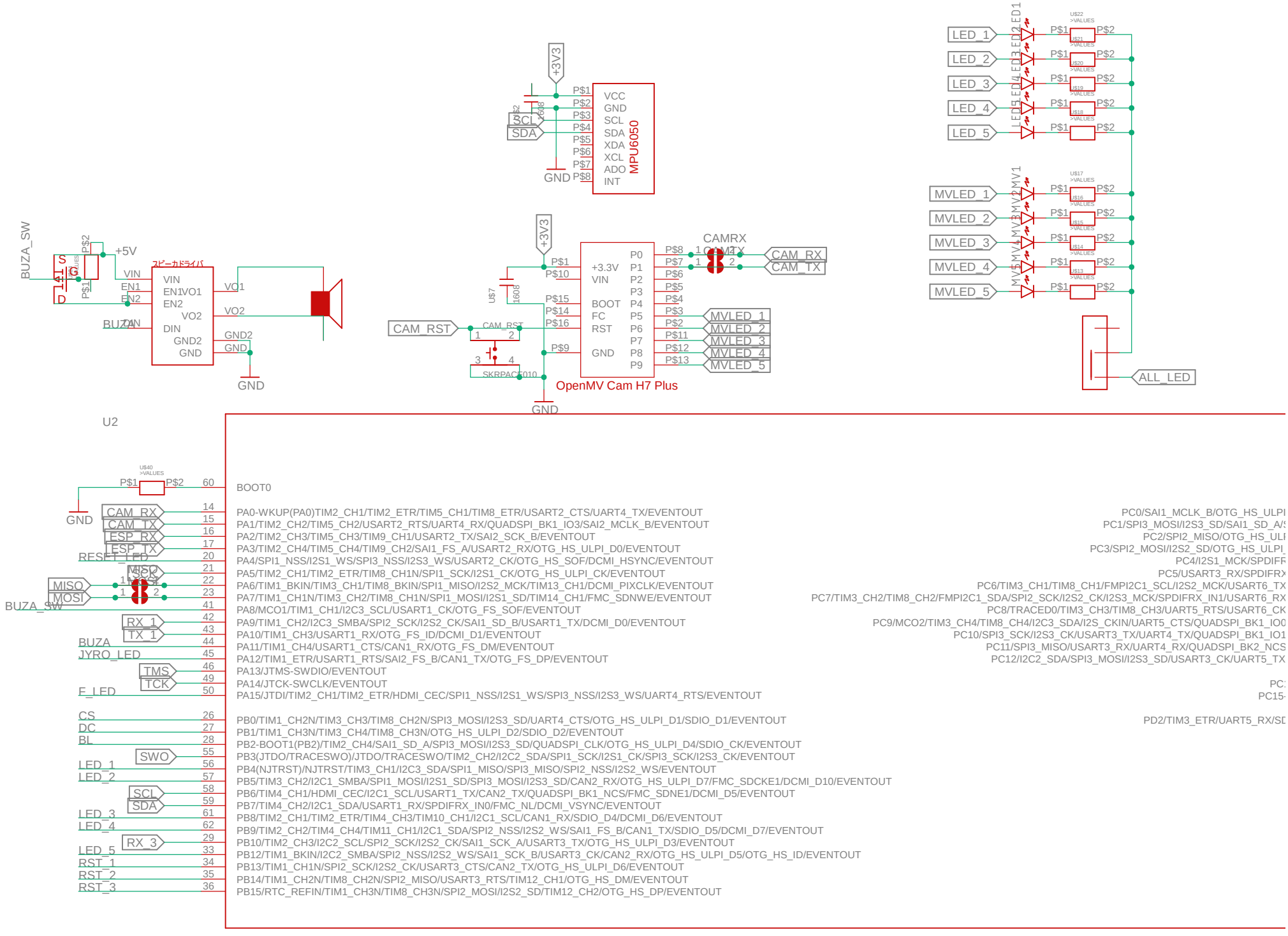
BUZA_SW
+5V
VIN
EN1
EN2
VO1
VO2
GND2
GND
DIN
BUZA
GND
+3V3
VCC
GND
SCL
SDA
XDA
XCL
ADO
INT
MPU6050
GND
LED_1
LED_2
LED_3
LED_4
LED_5
MVLED_1
MVLED_2
MVLED_3
MVLED_4
MVLED_5
ALL_LED
CAMRX
CAMTX
CAM_RX
CAM_TX
CAM_RST
+3.3V
VIN
BOOT
FC
RST
GND
P0
P1
P2
P3
P4
P5
P6
P7
P8
P9
OpenMV Cam H7 Plus
U2
BOOT0
PA0-WKUP(PA0)TIM2_CH1/TIM2_ETR/TIM5_CH1/TIM8_ETR/USART2_CTS/UART4_TX/EVENTOUT
PA1/TIM2_CH2/TIM5_CH2/USART2_RTS/UART4_RX/QUADSPI_BK1_IO3/SAI2_MCLK_B/EVENTOUT
PA2/TIM2_CH3/TIM5_CH3/TIM9_CH1/USART2_TX/SAI2_SCK_B/EVENTOUT
PA3/TIM2_CH4/TIM5_CH4/TIM9_CH2/SAI1_FS_A/USART2_RX/OTG_HS_ULPI_D0/EVENTOUT
PA4/SPI1_NSS/I2S1_WS/SPI3_NSS/I2S3_WS/USART2_CK/OTG_HS_SOF/DCMI_HSYNC/EVENTOUT
PA5/TIM2_CH1/TIM2_ETR/TIM8_CH1N/SPI1_SCK/I2S1_CK/OTG_HS_ULPI_CK/EVENTOUT
PA6/TIM1_BKIN/TIM3_CH1/TIM8_BKIN/SPI1_MISO/I2S2_MCK/TIM13_CH1/DCMI_PIXCLK/EVENTOUT
PA7/TIM1_CH1N/TIM3_CH2/TIM8_CH1N/SPI1_MOSI/I2S1_SD/TIM14_CH1/FMC_SDNWE/EVENTOUT
PA8/MCO1/TIM1_CH1/I2C3_SCL/USART1_CK/OTG_FS_SOF/EVENTOUT
PA9/TIM1_CH2/I2C3_SMBA/SPI2_SCK/I2S2_CK/SAI1_SD_B/USART1_TX/DCMI_D0/EVENTOUT
PA10/TIM1_CH3/USART1_RX/OTG_FS_ID/DCMI_D1/EVENTOUT
PA11/TIM1_CH4/USART1_CTS/CAN1_RX/OTG_FS_DM/EVENTOUT
PA12/TIM1_ETR/USART1_RTS/SAI2_FS_B/CAN1_TX/OTG_FS_DP/EVENTOUT
PA13/JTMS-SWDIO/EVENTOUT
PA14/JTCK-SWCLK/EVENTOUT
PA15/JTDI/TIM2_CH1/TIM2_ETR/HDMI_CEC/SPI1_NSS/I2S1_WS/SPI3_NSS/I2S3_WS/UART4_RTS/EVENTOUT
PB0/TIM1_CH2N/TIM3_CH3/TIM8_CH2N/SPI3_MOSI/I2S3_SD/UART4_CTS/OTG_HS_ULPI_D1/SDIO_D1/EVENTOUT
PB1/TIM1_CH3N/TIM3_CH4/TIM8_CH3N/OTG_HS_ULPI_D2/SDIO_D2/EVENTOUT
PB2-BOOT1(PB2)/TIM2_CH4/SAI1_SD_A/SPI3_MOSI/I2S3_SD/QUADSPI_CLK/OTG_HS_ULPI_D4/SDIO_CK/EVENTOUT
PB3(JTDO/TRACESWO)/JTDO/TRACESWO/TIM2_CH2/I2C2_SDA/SPI1_SCK/I2S1_CK/SPI3_SCK/I2S3_CK/EVENTOUT
PB4(NJTRST)/NJTRST/TIM3_CH1/I2C3_SDA/SPI1_MISO/SPI3_MISO/SPI2_NSS/I2S2_WS/EVENTOUT
PB5/TIM3_CH2/I2C1_SMBA/SPI1_MOSI/I2S1_SD/SPI3_MOSI/I2S3_SD/CAN2_RX/OTG_HS_ULPI_D7/FMC_SDCKE1/DCMI_D10/EVENTOUT
PB6/TIM4_CH1/HDMI_CEC/I2C1_SCL/USART1_TX/CAN2_TX/QUADSPI_BK1_NCS/FMC_SDNE1/DCMI_D5/EVENTOUT
PB7/TIM4_CH2/I2C1_SDA/USART1_RX/SPDIFRX_IN0/FMC_NL/DCMI_VSYNC/EVENTOUT
PB8/TIM2_CH1/TIM2_ETR/TIM4_CH3/TIM10_CH1/I2C1_SCL/CAN1_RX/SDIO_D4/DCMI_D6/EVENTOUT
PB9/TIM2_CH2/TIM4_CH4/TIM11_CH1/I2C1_SDA/SPI2_NSS/I2S2_WS/SAI1_FS_B/CAN1_TX/SDIO_D5/DCMI_D7/EVENTOUT
PB10/TIM2_CH3/I2C2_SCL/SPI2_SCK/I2S2_CK/SAI1_SCK_A/USART3_TX/OTG_HS_ULPI_D3/EVENTOUT
PB12/TIM1_BKIN/I2C2_SMBA/SPI2_NSS/I2S2_WS/SAI1_SCK_B/USART3_CK/CAN2_RX/OTG_HS_ULPI_D5/OTG_HS_ID/EVENTOUT
PB13/TIM1_CH1N/SPI2_SCK/I2S2_CK/USART3_CTS/CAN2_TX/OTG_HS_ULPI_D6/EVENTOUT
PB14/TIM1_CH2N/TIM8_CH2N/SPI2_MISO/USART3_RTS/TIM12_CH1/OTG_HS_DM/EVENTOUT
PB15/RTC_REFIN/TIM1_CH3N/TIM8_CH3N/SPI2_MOSI/I2S2_SD/TIM12_CH2/OTG_HS_DP/EVENTOUT
PC0/SAI1_MCLK_B/OTG_HS_ULPI
PC1/SPI3_MOSI/I2S3_SD/SAI1_SD_A/
PC2/SPI2_MISO/OTG_HS_ULI
PC3/SPI2_MOSI/I2S2_SD/OTG_HS_ULPI_
PC4/I2S1_MCK/SPDIFR
PC5/USART3_RX/SPDIFRX
PC6/TIM3_CH1/TIM8_CH1/FMPI2C1_SCL/I2S2_MCK/USART6_TX
PC7/TIM3_CH2/TIM8_CH2/FMPI2C1_SDA/SPI2_SCK/I2S2_CK/I2S3_MCK/SPDIFRX_IN1/USART6_RX
PC8/TRACED0/TIM3_CH3/TIM8_CH3/UART5_RTS/USART6_CK
PC9/MCO2/TIM3_CH4/TIM8_CH4/I2C3_SDA/I2S_CKIN/UART5_CTS/QUADSPI_BK1_IO0
PC10/SPI3_SCK/I2S3_CK/USART3_TX/UART4_TX/QUADSPI_BK1_IO1
PC11/SPI3_MISO/USART3_RX/UART4_RX/QUADSPI_BK2_NCS
PC12/I2C2_SDA/SPI3_MOSI/I2S3_SD/USART3_CK/UART5_TX
PC:
PC15-
PD2/TIM3_ETR/UART5_RX/SD
STM32F446RET6

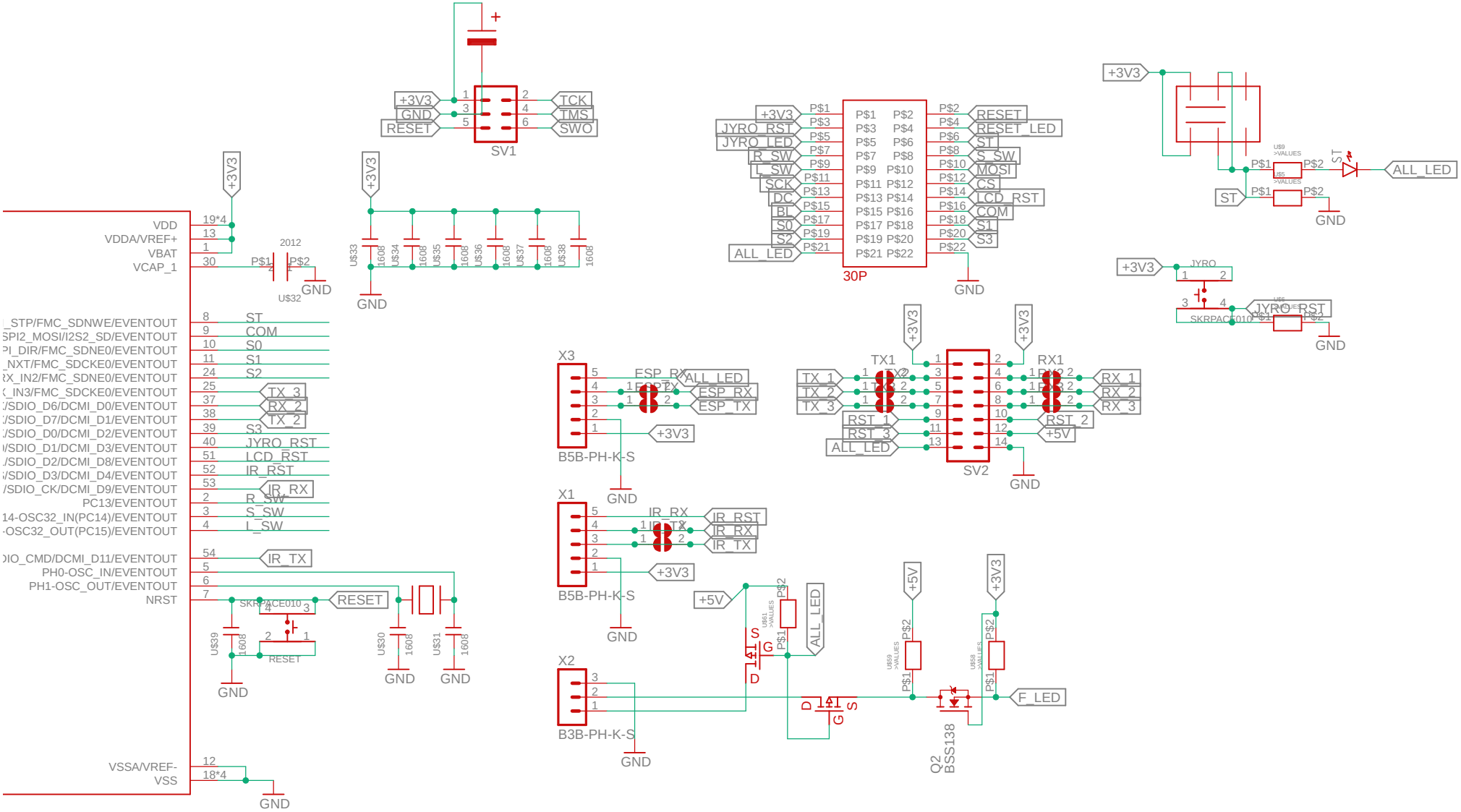
SV1
+3V3
GND
RESET
TCK
TMS
SWO
30P
JYRO_RST
JYRO_LED
R_SW
L_SW
SCK
DC
BL
S0
S2
ALL_LED
RESET
RESET_LED
ST
S_SW
MOSI
CS
LCD_RST
COM
S1
S3
JYRO
SKRPACE010
U$32
2012
U$33
U$34
U$35
U$36
U$37
U$38
1608
VDD
VDDA/VREF+
VBAT
VCAP_1
19*4
13
1
30
_STP/FMC_SDNWE/EVENTOUT
SPI2_MOSI/I2S2_SD/EVENTOUT
PI_DIR/FMC_SDNE0/EVENTOUT
_NXT/FMC_SDCKE0/EVENTOUT
RX_IN2/FMC_SDNE0/EVENTOUT
_IN3/FMC_SDCKE0/EVENTOUT
/SDIO_D6/DCMI_D0/EVENTOUT
/SDIO_D7/DCMI_D1/EVENTOUT
/SDIO_D0/DCMI_D2/EVENTOUT
/SDIO_D1/DCMI_D3/EVENTOUT
/SDIO_D2/DCMI_D8/EVENTOUT
/SDIO_D3/DCMI_D4/EVENTOUT
/SDIO_CK/DCMI_D9/EVENTOUT
PC13/EVENTOUT
14-OSC32_IN(PC14)/EVENTOUT
-OSC32_OUT(PC15)/EVENTOUT
DIO_CMD/DCMI_D11/EVENTOUT
PH0-OSC_IN/EVENTOUT
PH1-OSC_OUT/EVENTOUT
NRST
VSSA/VREF-
VSS
8
9
10
11
24
25
37
38
39
40
51
52
53
2
3
4
54
5
6
7
12
18*4
TX_3
RX_2
TX_2
JYRO_RST
LCD_RST
IR_RST
IR_RX
R_SW
S_SW
L_SW
IR_TX
U$39
U$30
U$31
X3
B5B-PH-K-S
ESP_RX
ESP_TX
X1
IR_TX
X2
B3B-PH-K-S
TX1
RX1
SV2
RST_1
RST_3
+5V
RST_2
F_LED
Q2
BSS138
U$9
>VALUES
U$5
U$61
U$59
U$58