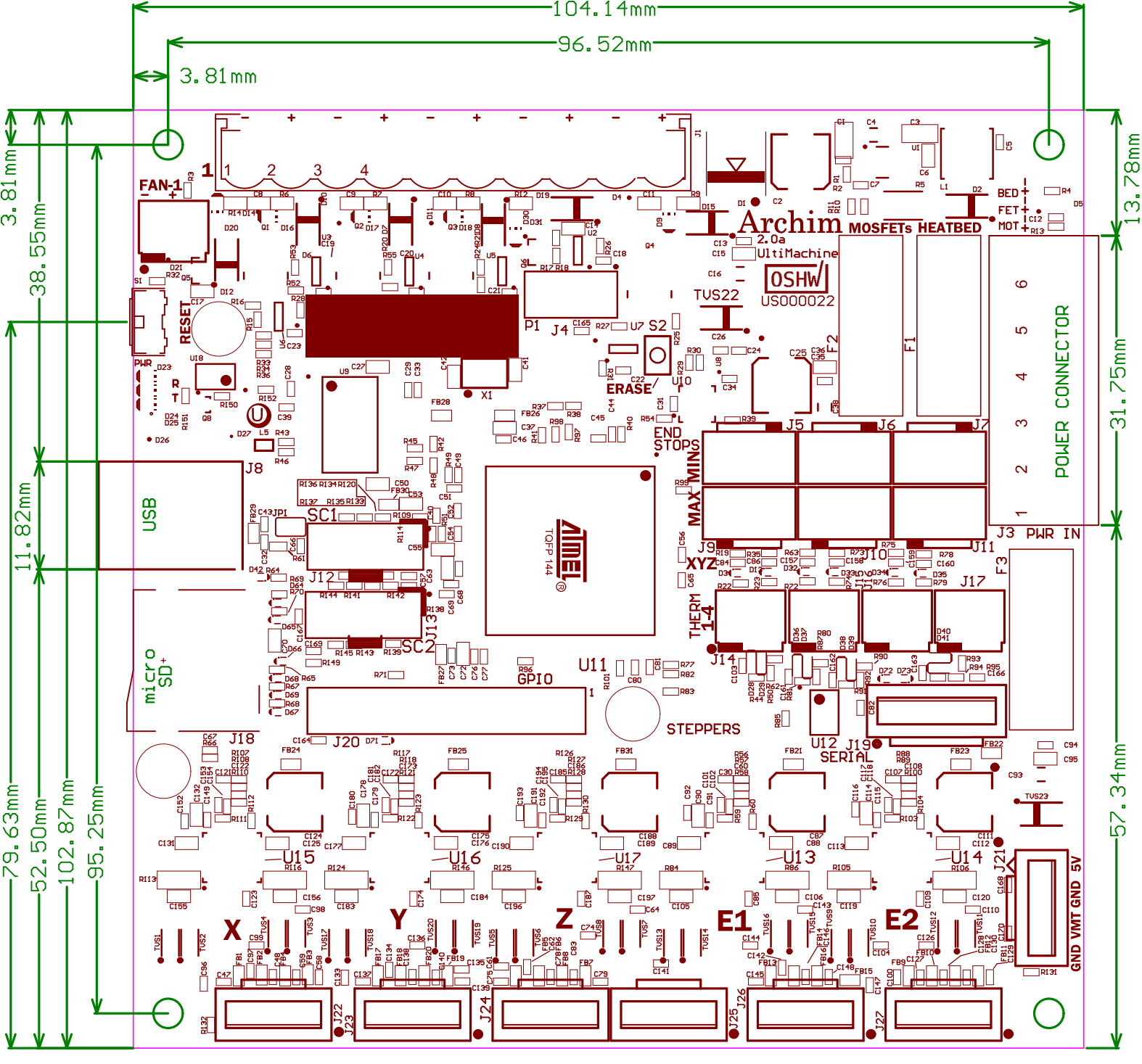
104.14mm
96.52mm
3.81mm
3.81mm
38.55mm
11.82mm
79.63mm
52.50mm
102.87mm
95.25mm
13.78mm
31.75mm
57.34mm
FAN-1
RESET
PWR
USB
micro SD+
Archim
MOSFETs HEATBED
2.0a
UltiMachine
OSHW
US000022
TVS22
BED
FET
MOT
POWER CONNECTOR
J3 PWR IN
ERASE
END STOPS
MAX MIN
XYZ
THERM 1-4
STEPPERS
GPIO
SERIAL
TQFP 144
ATMEL
X
Y
Z
E1
E2
GND VMT GND 5V

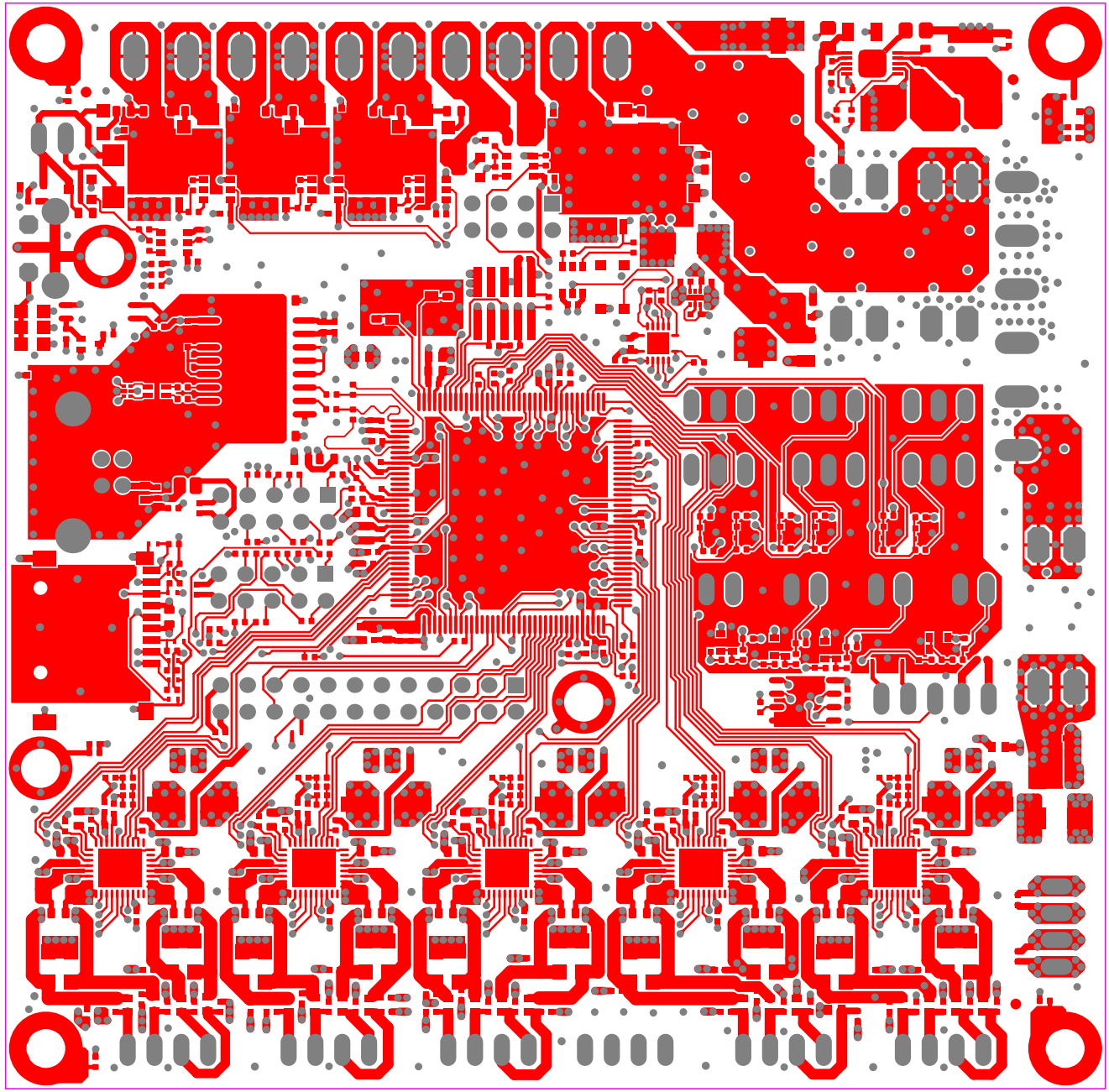

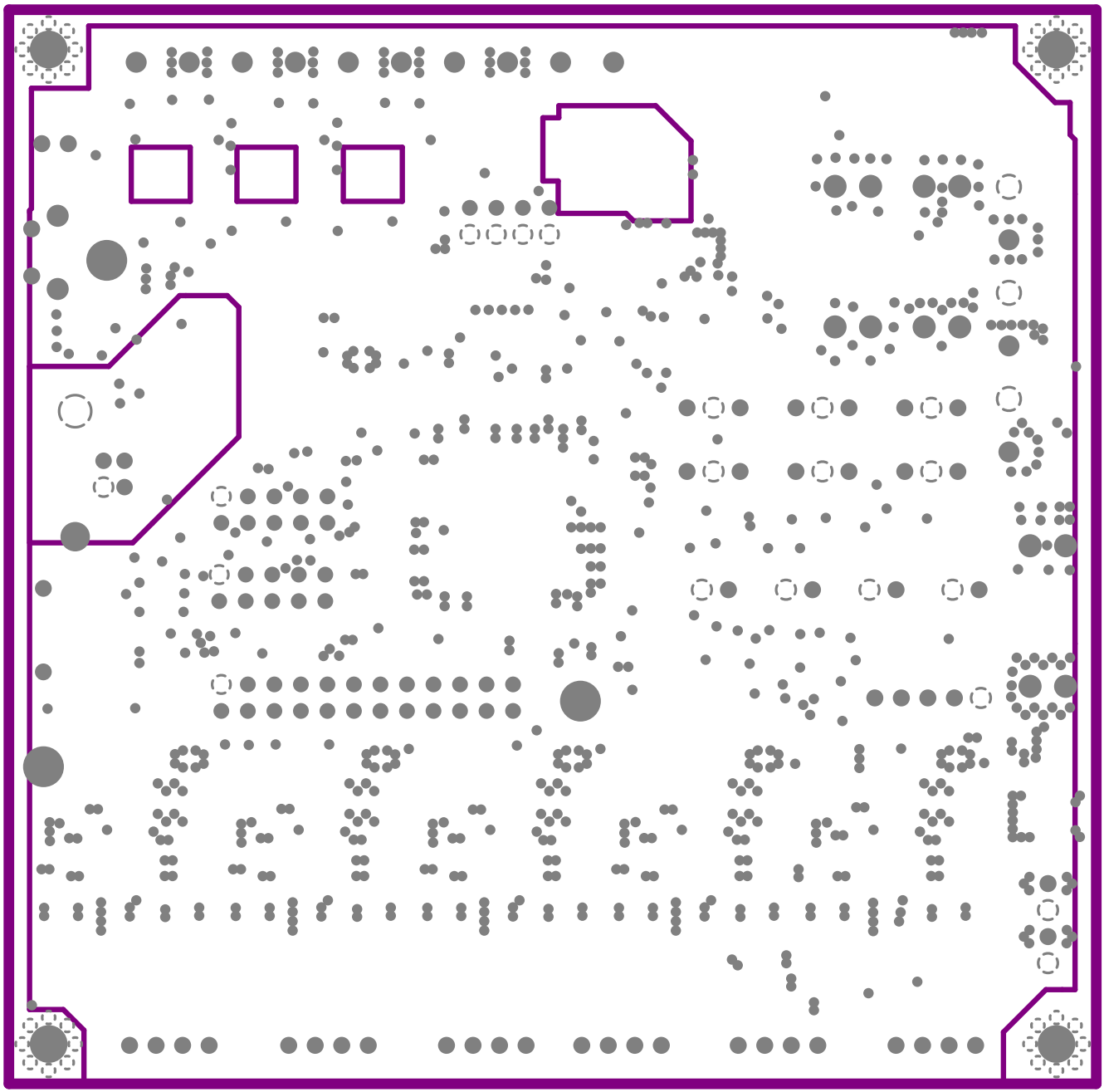

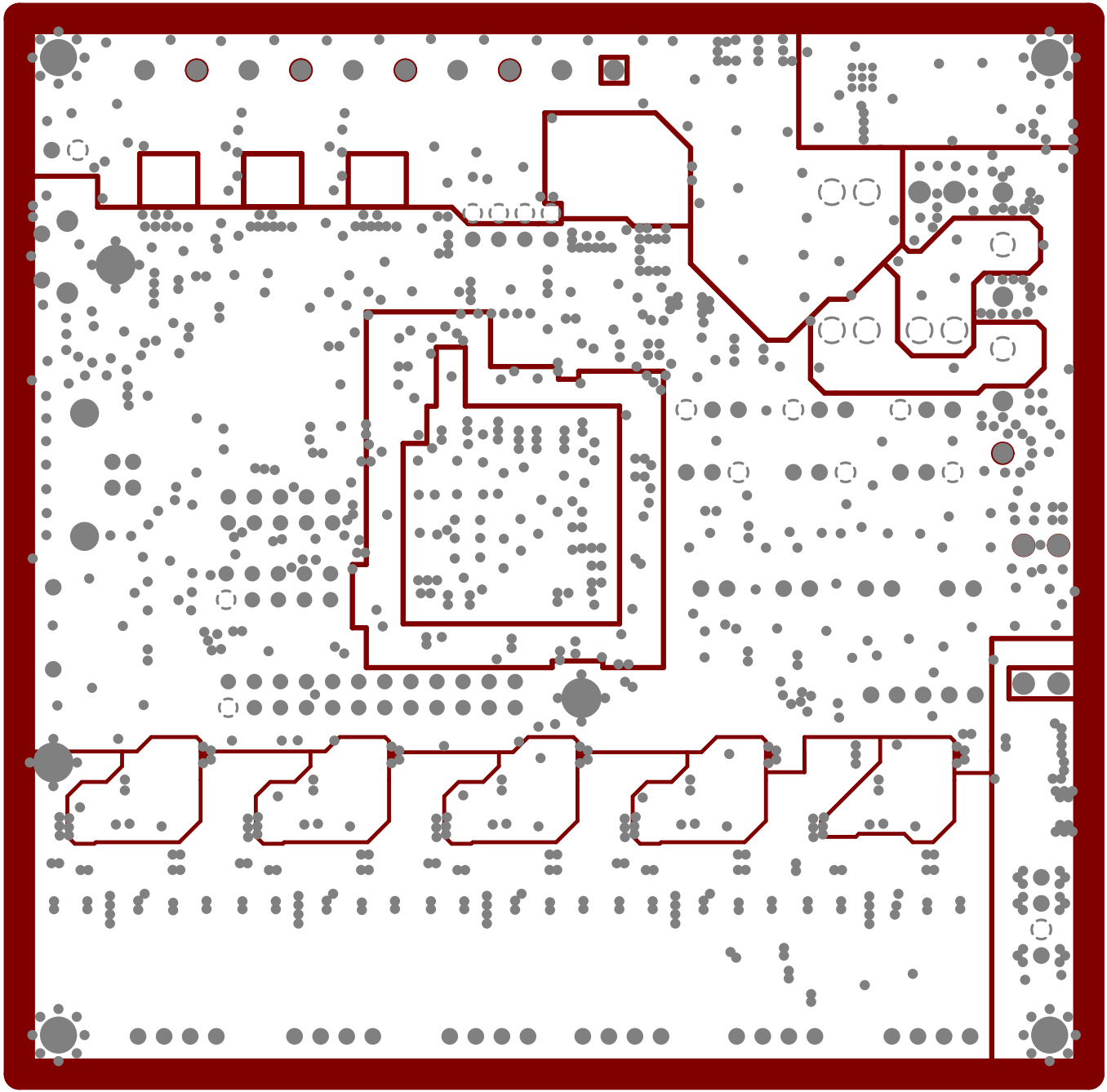

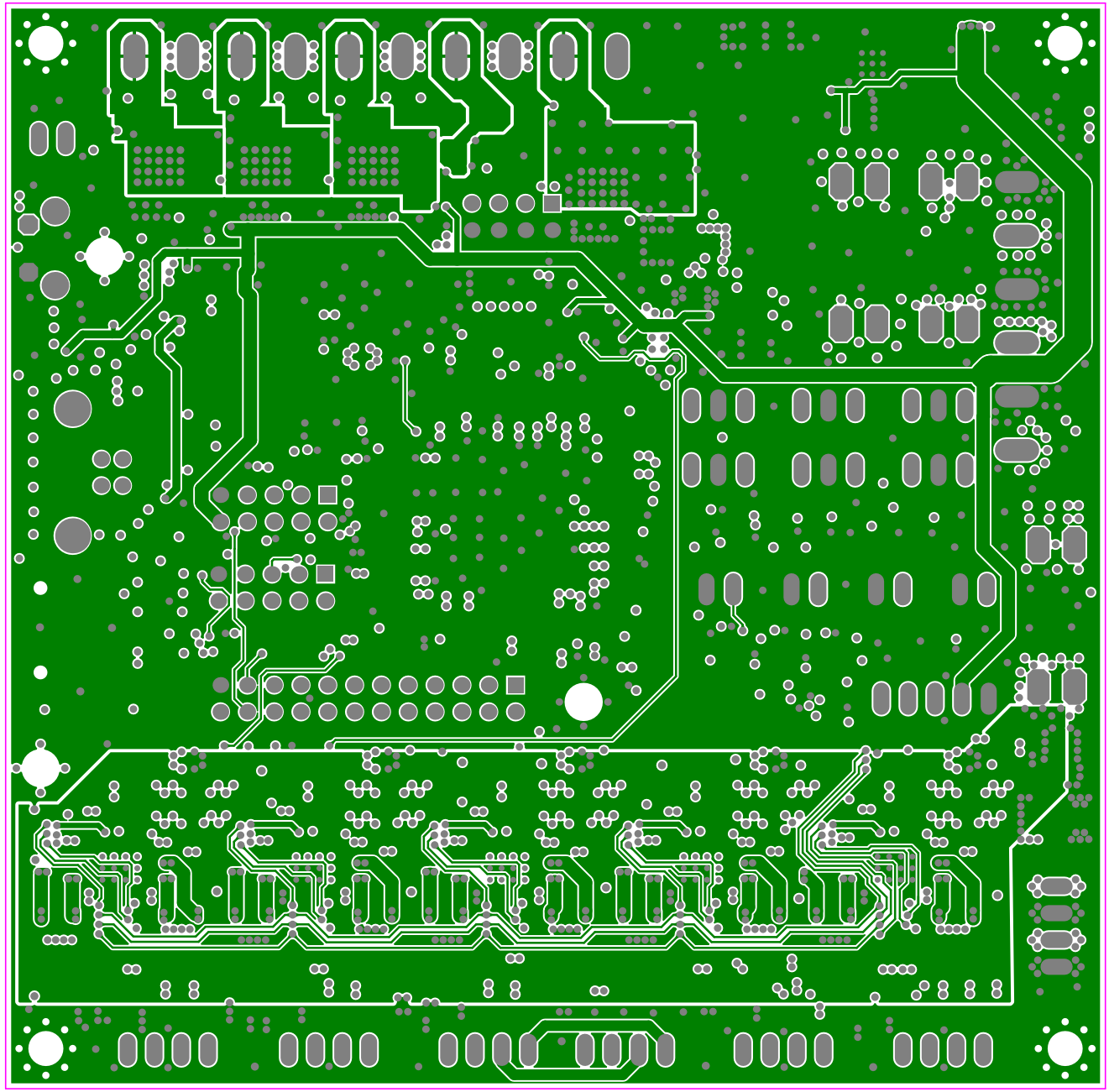

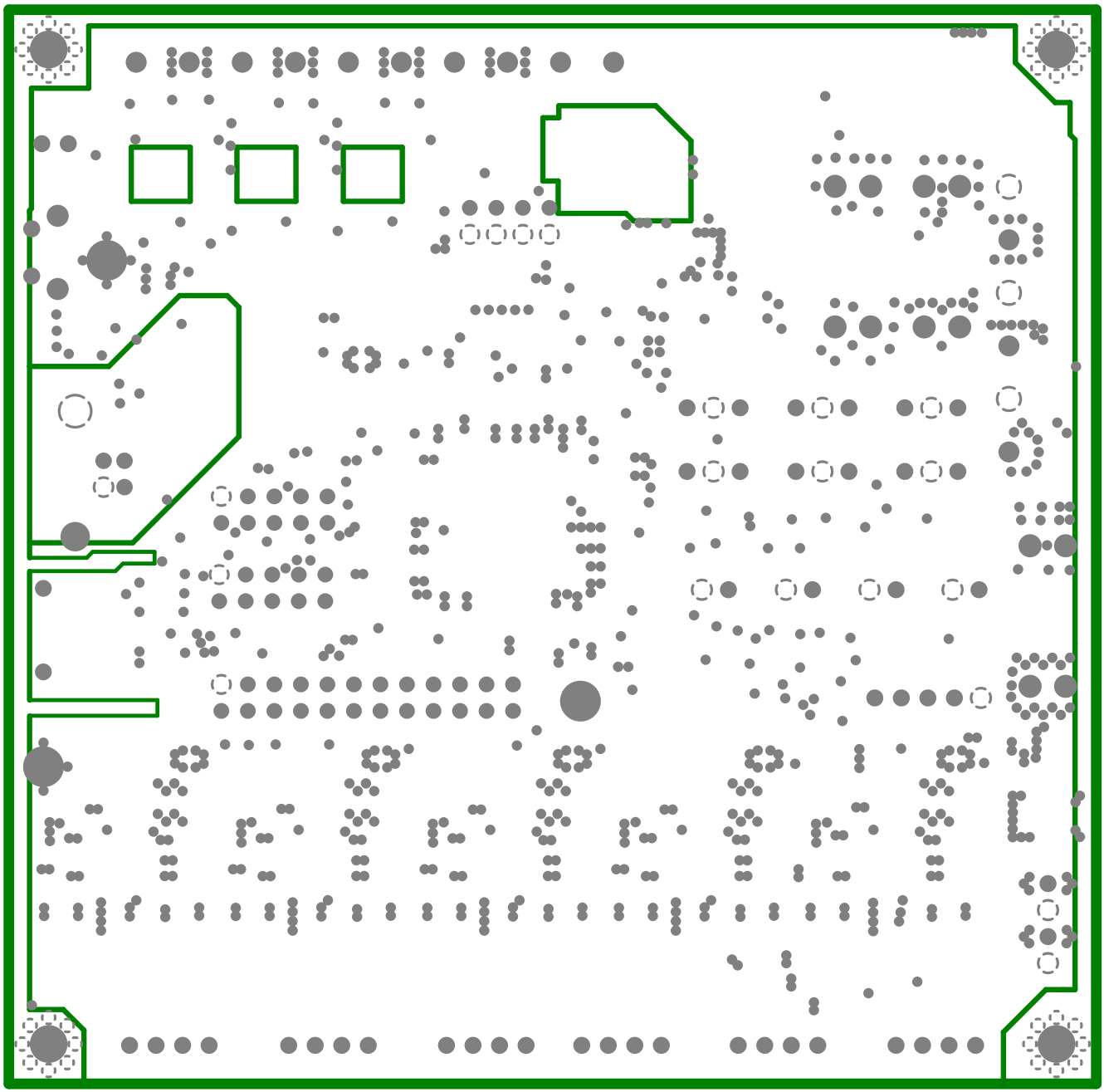

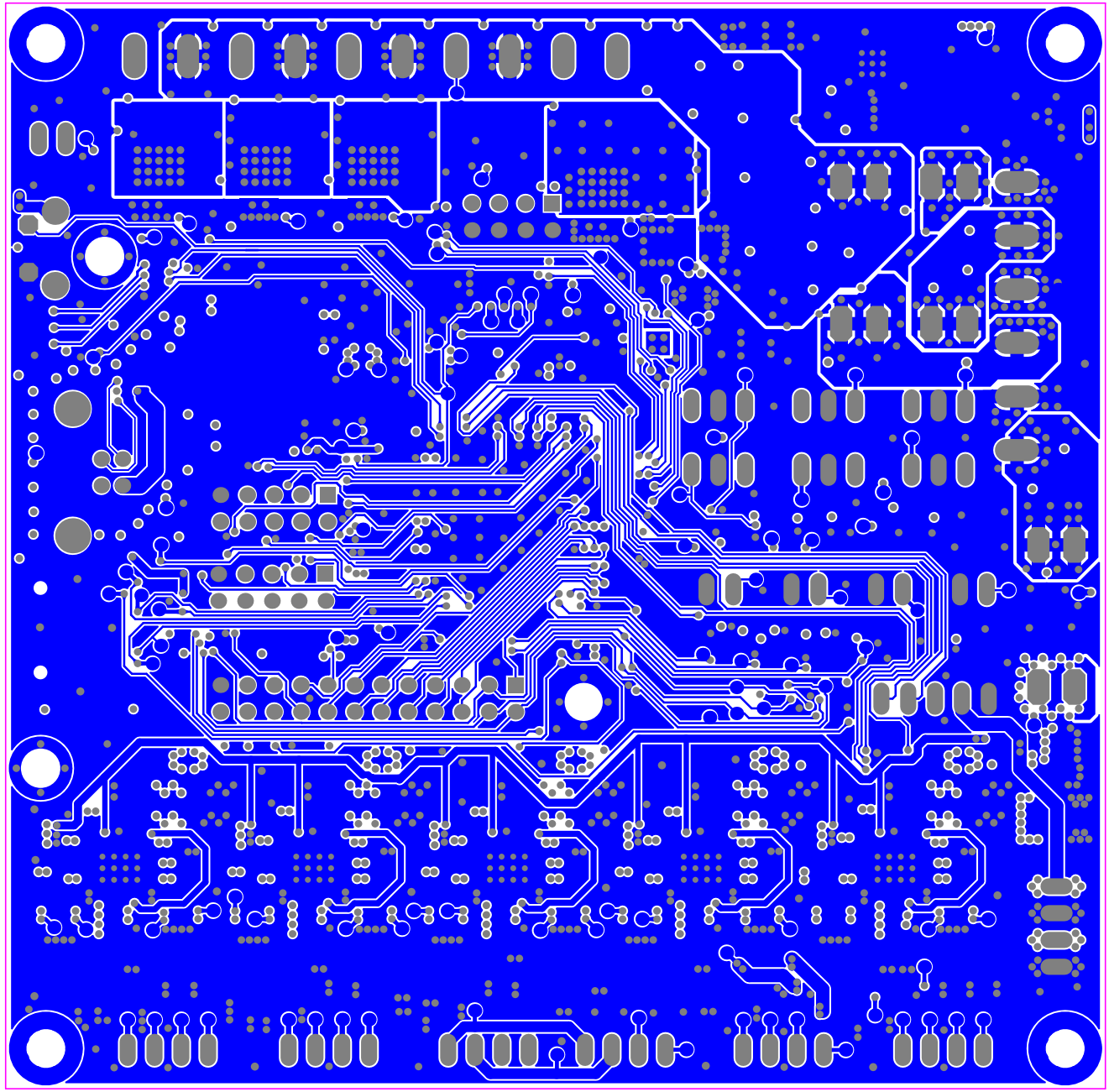

FAN-1
Archim
2.0a
UltiMachine
OSHW
US000022
MOSFETs HEATBED
BED
FET
MOT
ERASE
END STOPS
MAX
XYZ
PWR IN
SC1
GPIO
STEPPERS
SERIAL
X
Y
Z
E1
E2
GND VMT GND 5V

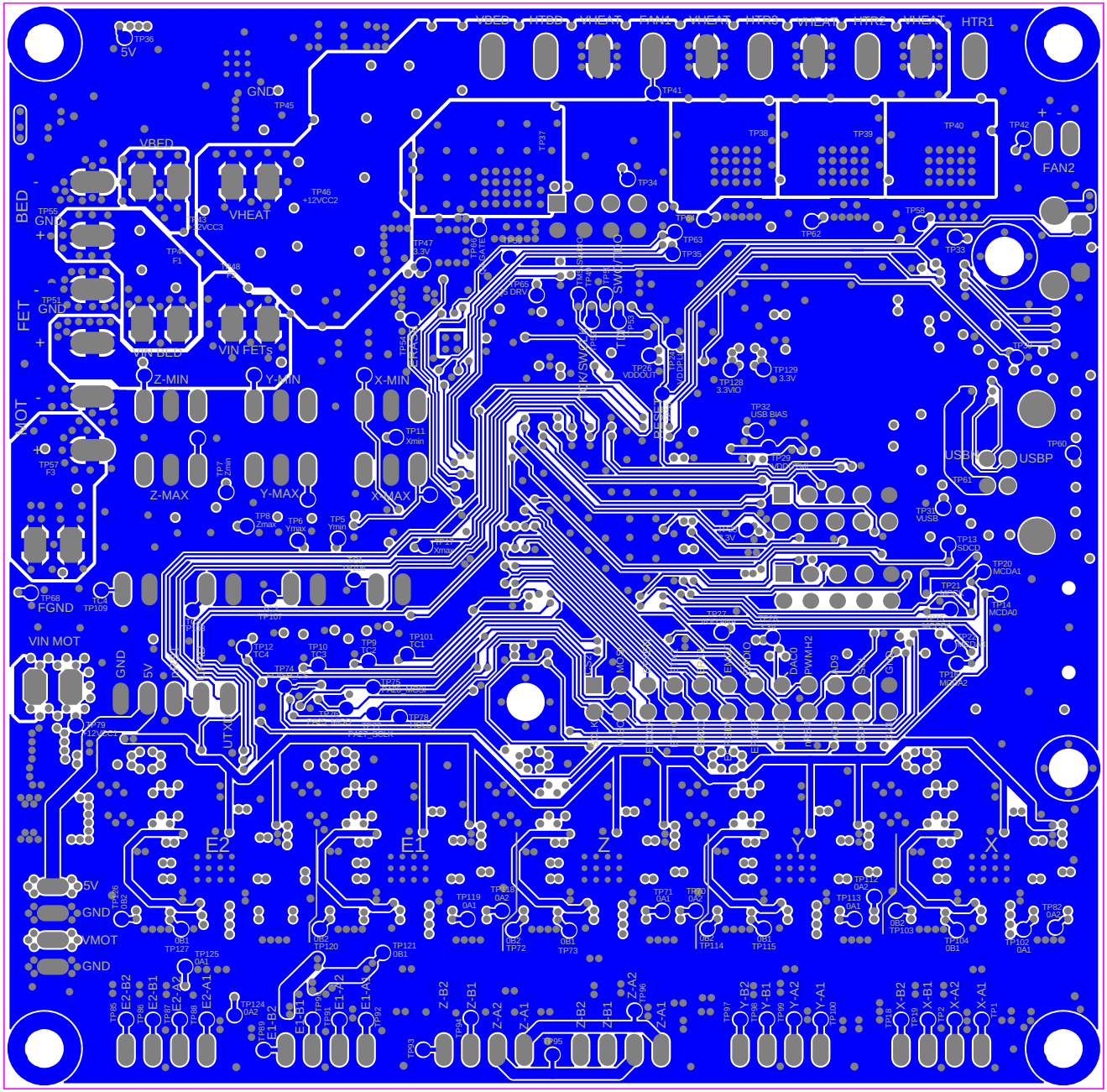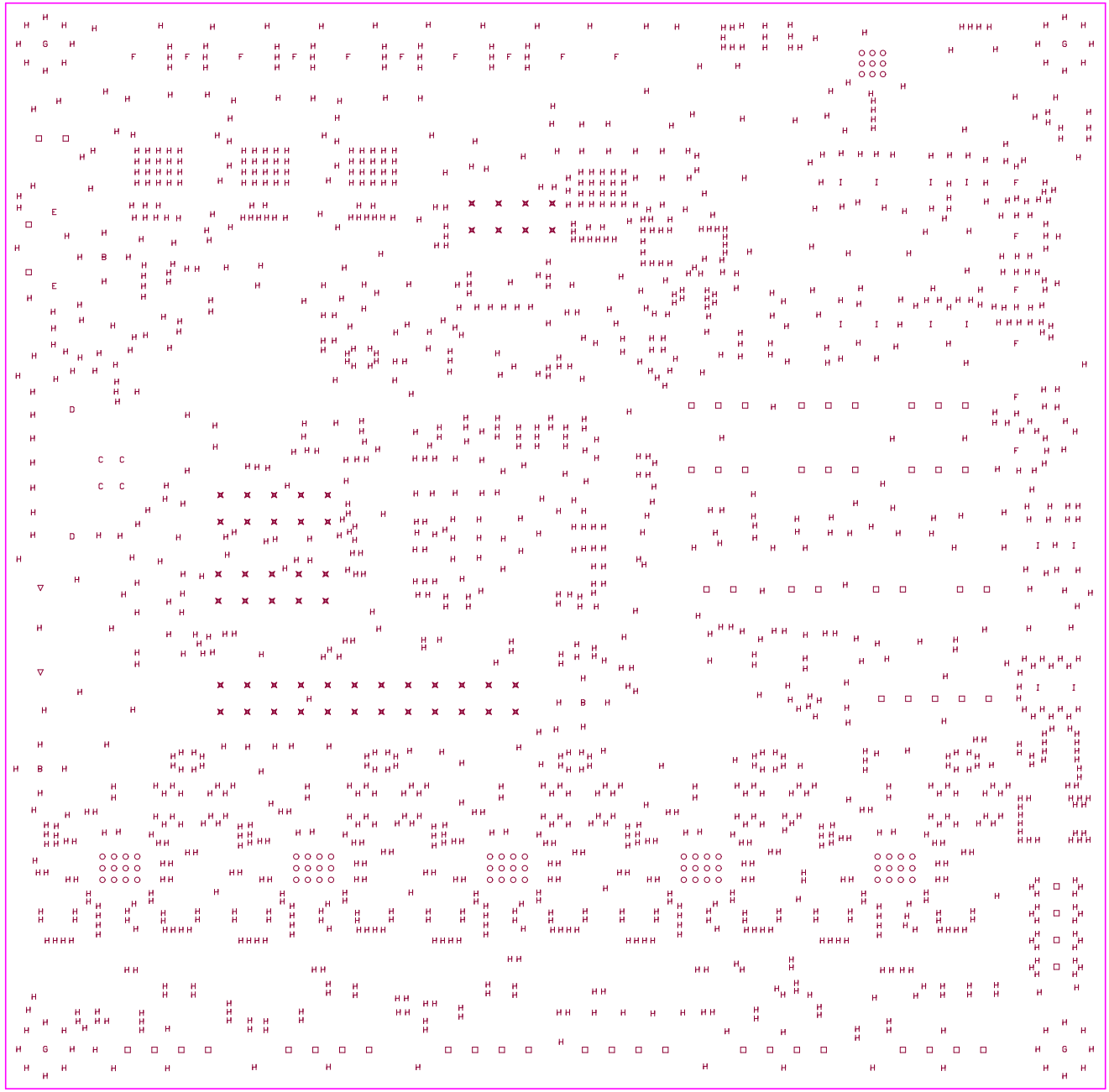
VBED
HTR0
VHEAT
FAN1
VHEAT
HTR3
VHEAT
HTR2
VHEAT
HTR1
FAN2
BED
FET
MOT
VIN BED
VIN FETs
Z-MIN
Y-MIN
X-MIN
Z-MAX
Y-MAX
X-MAX
FGND
VIN MOT
USBM
USBP
E2
E1
Z
Y
X