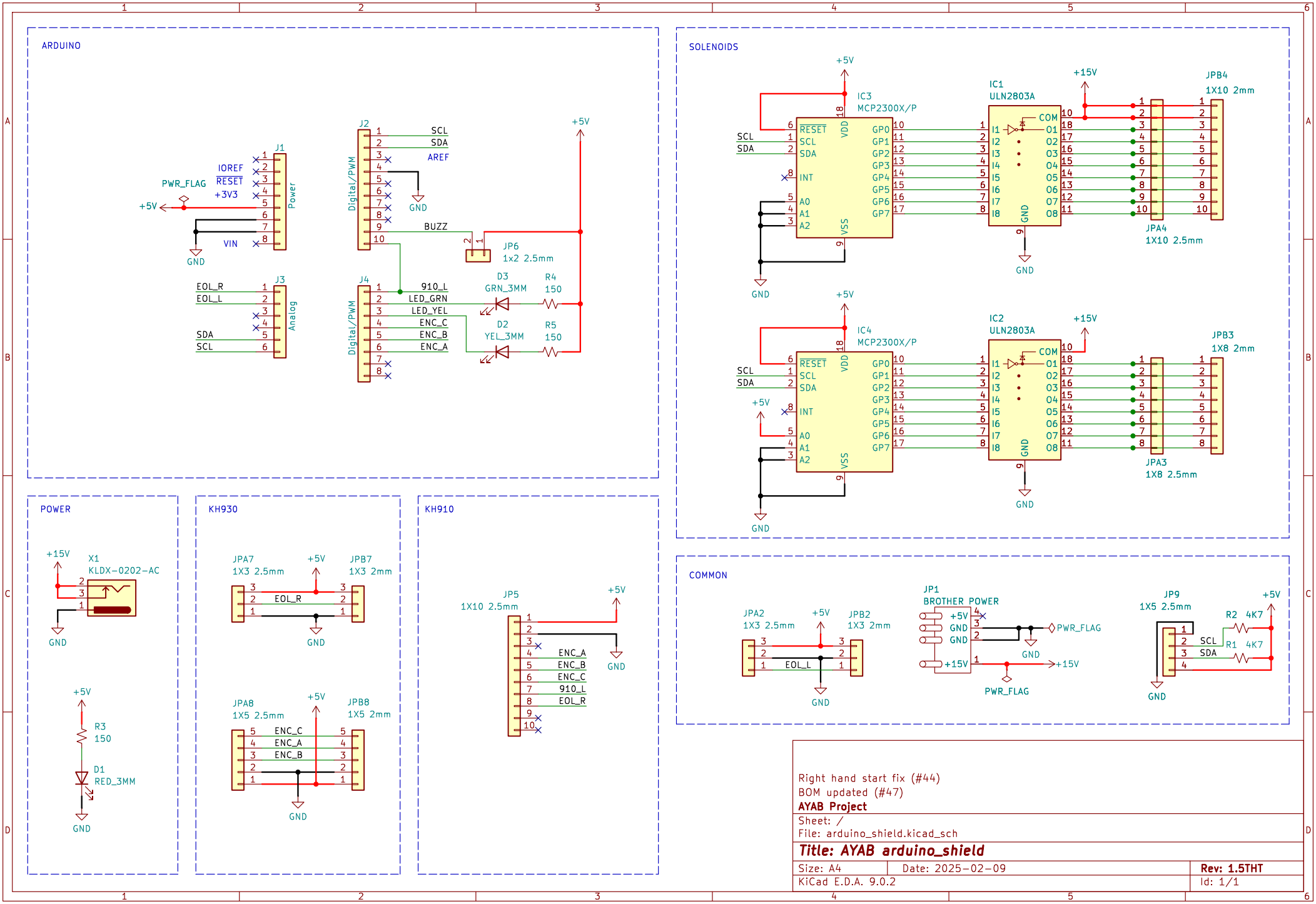

Right hand start fix (#44)
BOM updated (#47)

AYAB Project

Sheet: /
File: arduino_shield.kicad_sch

Title: AYAB arduino_shield

Size: A4	Date: 2025-02-09	**Rev: 1.5THT**
KiCad E.D.A. 9.0.2		Id: 1/1