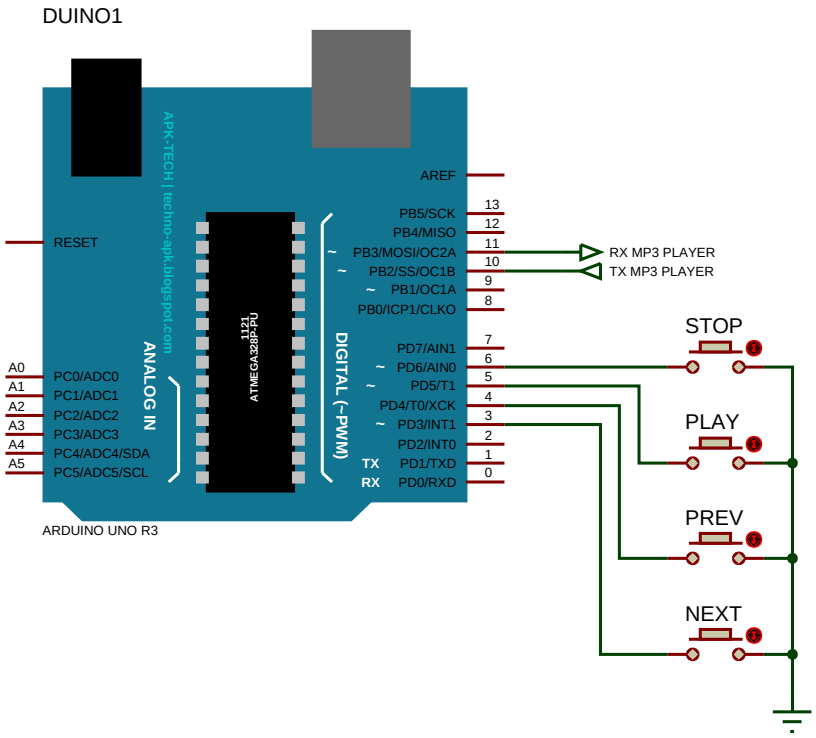
DUINO1
APK-TECH | techno-apk.blogspot.com
AREF
RESET
PB5/SCK 13
PB4/MISO 12
PB3/MOSI/OC2A 11
PB2/SS/OC1B 10
PB1/OC1A 9
PB0/ICP1/CLKO 8
RX MP3 PLAYER
TX MP3 PLAYER
1121
ATMEGA328P-PU
DIGITAL (~PWM)
ANALOG IN
A0 PC0/ADC0
A1 PC1/ADC1
A2 PC2/ADC2
A3 PC3/ADC3
A4 PC4/ADC4/SDA
A5 PC5/ADC5/SCL
PD7/AIN1 7
PD6/AIN0 6
PD5/T1 5
PD4/T0/XCK 4
PD3/INT1 3
PD2/INT0 2
TX PD1/TXD 1
RX PD0/RXD 0
ARDUINO UNO R3
STOP
PLAY
PREV
NEXT