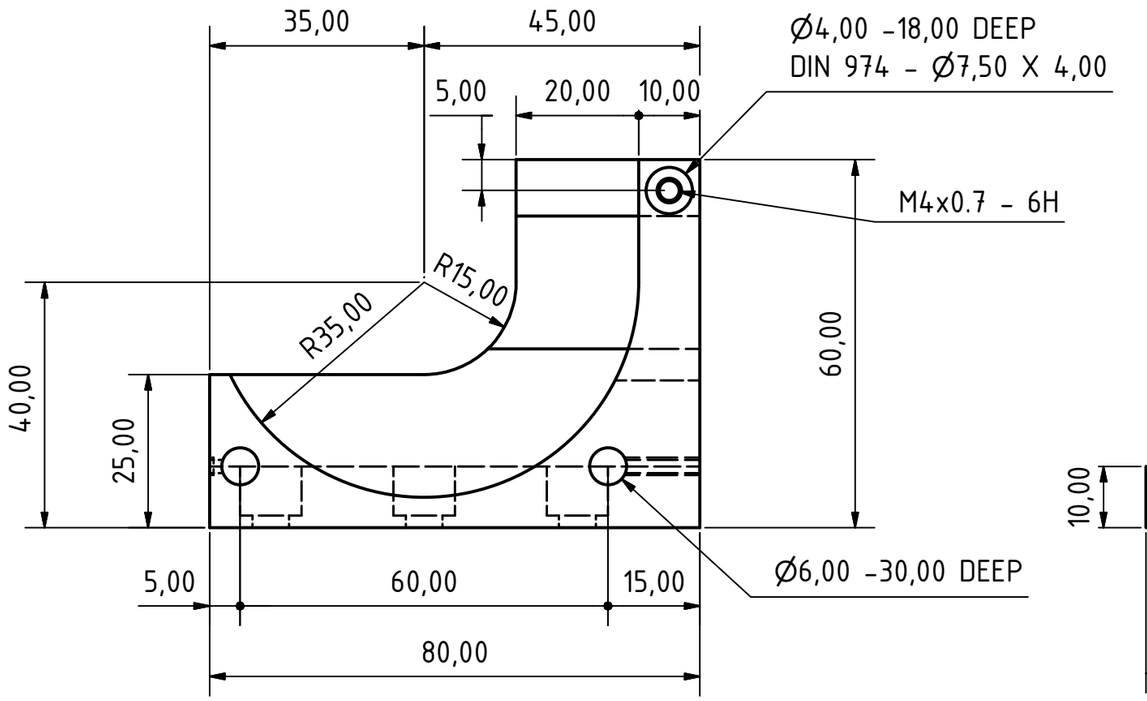

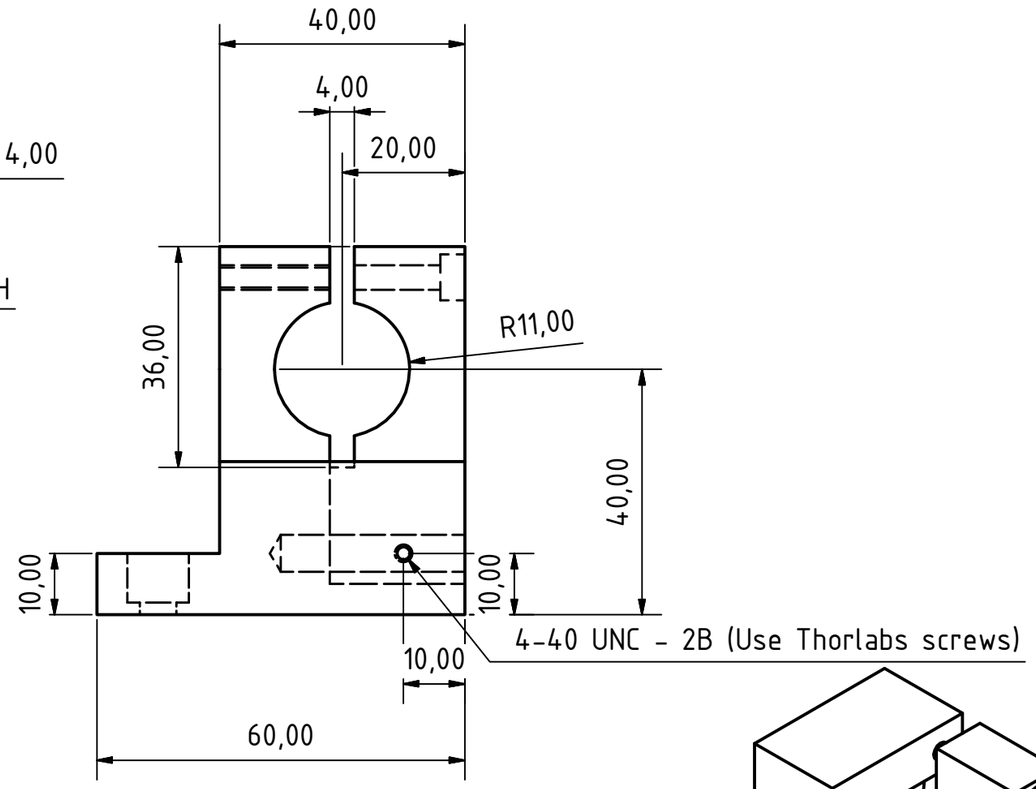

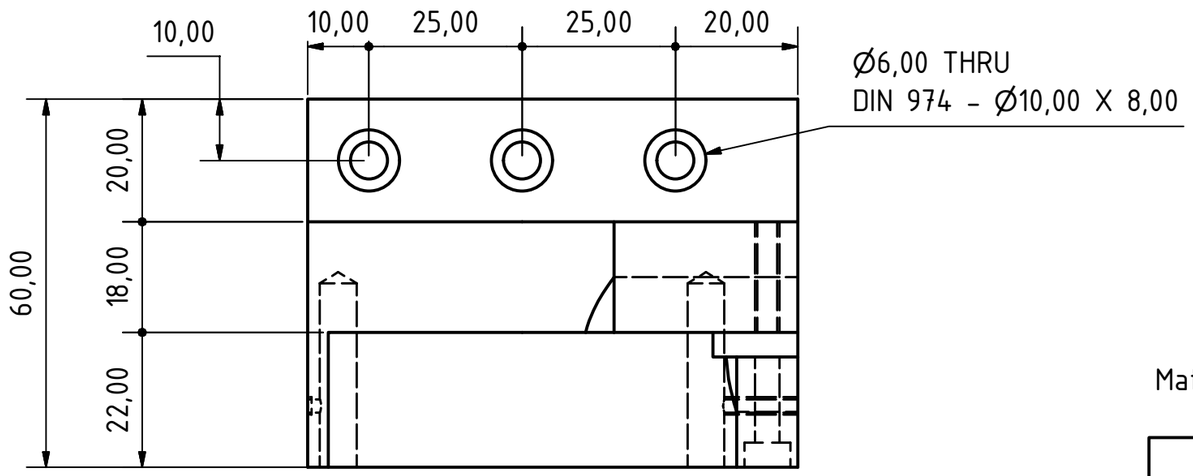

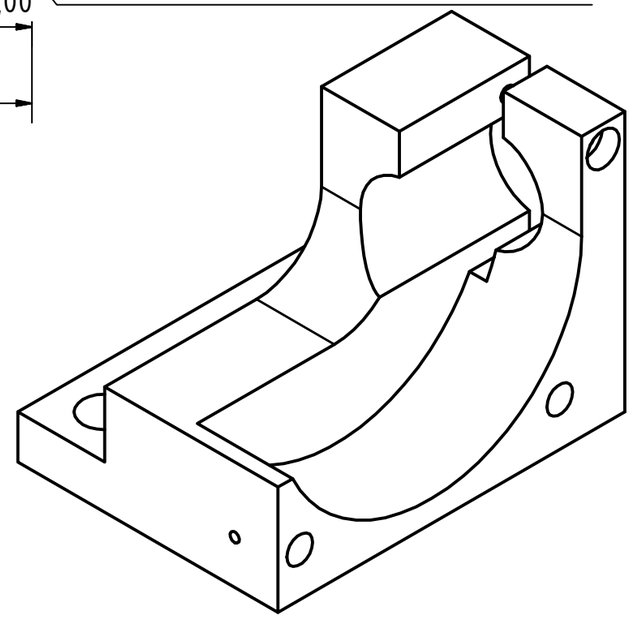

Material: Aluminium

State	Changes	Date	Name		Date	Name
				Drawn	23.01.2018	voigt
				Checked		
				Standard		

Thorlabs Galvo Mount Left (AL)

Galvomount-22mm-diameter-Thor

1

A3