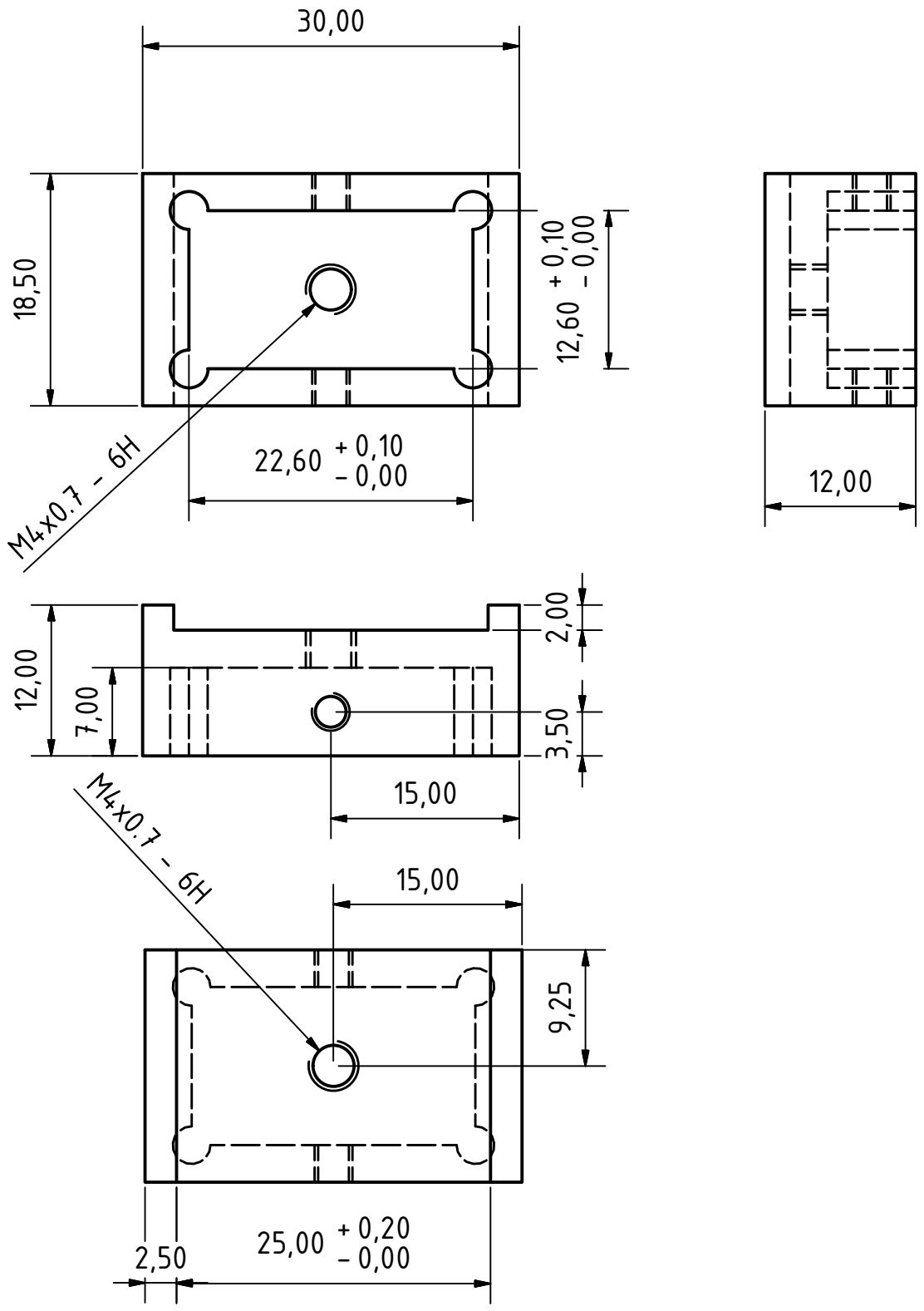

					Date	Name
				Drawn	23.01.2018	voigt
				Checked		
				Standard		
State	Changes	Date	Name			

10x20 mm Cuvette Clamp (POM)

Sample-cuvette-clamp-20mm-V3

1

A4