G2GFL100W

LED Flood Light Series

With it's integrated applications of LED light sources and it's unique circuit control design, G2G's Floodlight models conserve more than 80% of energy consumption. Given it's ultra- bright, high color rendering index, our Flood-light fixtures are the latest style in efficient outdoor lighting, all while demonstrating a long lasting product life of over 50,000 hours. Ideal for outdoor decorative building and monument lighting, industrial lighting, advertisement illumination, increasing sign visibility, road lighting and street lamp distribution, our LED Floodlights satisfy a variety of applications.

E361401 RoHS **IP65**

LED FLOOD LIGHT SPECIFICATIONS

Lifetime	≥50,000 hours	**Fixture Dimensioon**	11.22*14.1*3.94 in
Working Environment	-37°C-55°C	**Net Weight**	5.2kg/pc
Working Humidity	≤95%	**Packaging**	4pcs/ctn
CRI	≥75	**Protection Grade**	IP65 wet-Location
Material	Aluminum + Tempered glass	**Warranty**	3 Years
LED Quantity	1PC Integrated Bridgelux SMD LEDs		

LED FLOOD LIGHT PRODUCT OPTIONS LIST

Model No.	Power	Input Voltage	Input Current	Max Lighting Distance	Lumens	Beam Angle	CCT
G2GFL100W	100W	100-277VAC, 50/60Hz	0.36A-1.0A	8.20Ft	4500 Lm	120°	3000-3500K 4000-4500K 6000-6500K

LED FLOOD LIGHT DIMENSIONS

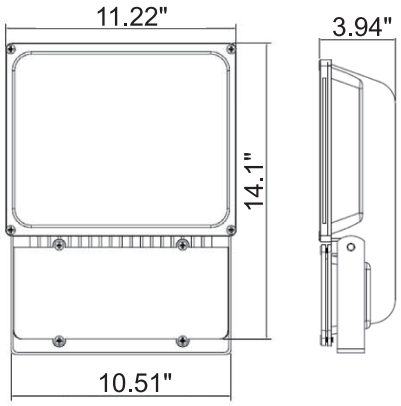

973-575-2600 973-575-2603 1829 Underwood Blvd, Unit 5, Delran Twp, NJ 08075 www.g2glighting.com

G2GFL50W

LED Flood Light Series

With it's integrated applications of LED light sources and it's unique circuit control design, G2G's Floodlight models conserve more than 80% of energy consumption. Given it's ultra- bright, high color rendering index, our Flood-light fixtures are the latest style in efficient outdoor lighting, all while demonstrating a long lasting product life of over 50,000 hours. Ideal for outdoor decorative building and monument lighting, industrial lighting, advertisement illumination, increasing sign visibility, road lighting and street lamp distribution, our LED Floodlights satisfy a variety of applications.

E361401 RoHS **IP65**

LED FLOOD LIGHT SPECIFICATIONS

Lifetime	≥50,000 hours	**Fixture Dimensioon**	11.1*9.13*5.23 in
Working Environment	-37°C-55°C	**Net Weight**	2.6kg/pc
Working Humidity	≤95%	**Packaging**	6pcs/ctn
CRI	≥75	**Protection Grade**	IP65 wet-Location
Material	Aluminum + Tempered glass	**Warranty**	3 Years
LED Quantity	1PC Integrated Bridgelux SMD LEDs		

LED FLOOD LIGHT PRODUCT OPTIONS LIST

Model No.	Power	Input Voltage	Input Current	Max Lighting Distance	Lumens	Beam Angle	CCT
G2GFL50W	50W	100-277VAC, 50/60Hz	0.2A-0.5A	8.20Ft	4500 Lm	120°	3000-3500K 4000-4500K 6000-6500K

LED FLOOD LIGHT DIMENSIONS

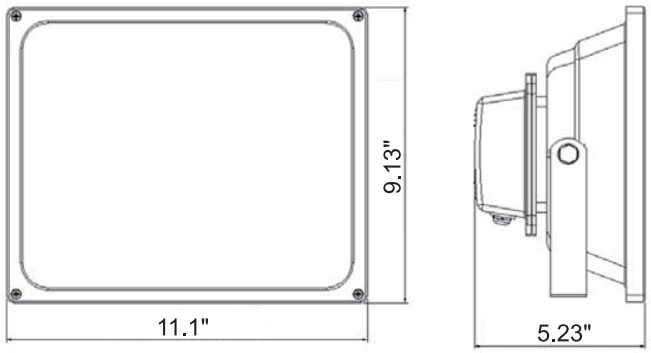

973-575-2600 973-575-2603 1829 Underwood Blvd, Unit 5, Delran Twp, NJ 08075 www.g2glighting.com

G2GFL30W

LED Flood Light Series

With it's integrated applications of LED light sources and it's unique circuit control design, G2G's Floodlight models conserve more than 80% of energy consumption. Given it's ultra- bright, high color rendering index, our Flood-light fixtures are the latest style in efficient outdoor lighting, all while demonstrating a long lasting product life of over 50,000 hours. Ideal for outdoor decorative building and monument lighting, industrial lighting, advertisement illumination, increasing sign visibility, road lighting and street lamp distribution, our LED Floodlights satisfy a variety of applications.

E361401 RoHS **IP65**

LED FLOOD LIGHT SPECIFICATIONS

Lifetime	≥50,000 hours	**Fixture Dimensioon**	8.86*7.28*4.96 in
Working Environment	-37°C-55°C	**Net Weight**	2kg/pc
Working Humidity	≤95%	**Packaging**	8pcs/ctn
CRI	≥75	**Protection Grade**	IP65 wet-Location
Material	Aluminum + Tempered glass	**Warranty**	3 Years
LED Quantity	1PC Integrated Bridgelux SMD LEDs		

LED FLOOD LIGHT PRODUCT OPTIONS LIST

Model No.	Power	Input Voltage	Input Current	Max Lighting Distance	Lumens	Beam Angle	CCT
G2GFL30W	30W	100-277VAC, 50/60Hz	0.1A-0.3A	7.22Ft	2700 Lm	120°	3000-3500K 4000-4500K 6000-6500K

LED FLOOD LIGHT DIMENSIONS

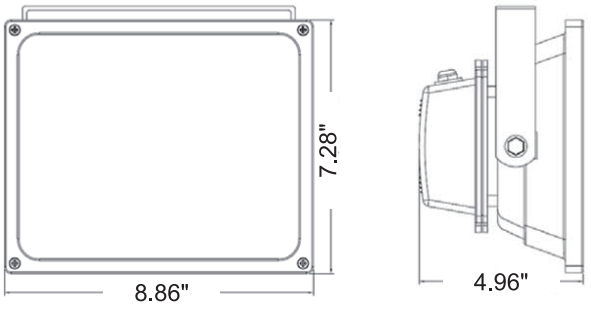

973-575-2600 973-575-2603 1829 Underwood Blvd, Unit 5, Delran Twp, NJ 08075 www.g2glighting.com

G2GFL20W

LED Flood Light Series

With it's integrated applications of LED light sources and it's unique circuit control design, G2G's Floodlight models conserve more than 80% of energy consumption. Given it's ultra- bright, high color rendering index, our Flood-light fixtures are the latest style in efficient outdoor lighting, all while demonstrating a long lasting product life of over 50,000 hours. Ideal for outdoor decorative building and monument lighting, industrial lighting, advertisement illumination, increasing sign visibility, road lighting and street lamp distribution, our LED Floodlights satisfy a variety of applications.

E361401 RoHS **IP65**

LED FLOOD LIGHT SPECIFICATIONS

Lifetime	≥50,000 hours	**Fixture Dimensioon**	7.08*5.51*4.04 in
Working Environment	-37°C-55°C	**Net Weight**	1.06kg/pc
Working Humidity	≤95%	**Packaging**	12pcs/ctn
CRI	≥75	**Protection Grade**	IP65 wet-Location
Material	Aluminum + Tempered glass	**Warranty**	3 Years
LED Quantity	1PC Integrated Bridgelux SMD LEDs		

LED FLOOD LIGHT PRODUCT OPTIONS LIST

Model No.	Power	Input Voltage	Input Current	Max Lighting Distance	Lumens	Beam Angle	CCT
G2GFL20W	20W	100-277VAC, 50/60Hz	0.07A-0.20A	5.9Ft	1800 Lm	120°	3000-3500K 4000-4500K 6000-6500K

LED FLOOD LIGHT DIMENSIONS

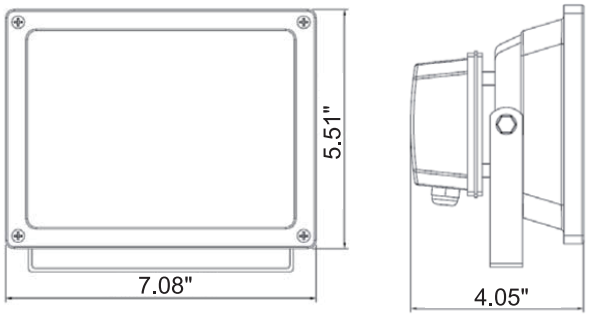

973-575-2600 973-575-2603 1829 Underwood Blvd, Unit 5, Delran Twp, NJ 08075 www.g2glighting.com

G2GFL10W

LED Flood Light Series

With it's integrated applications of LED light sources and it's unique circuit control design, G2G's Floodlight models conserve more than 80% of energy consumption. Given it's ultra- bright, high color rendering index, our Flood-light fixtures are the latest style in efficient outdoor lighting, all while demonstrating a long lasting product life of over 50,000 hours. Ideal for outdoor decorative building and monument lighting, industrial lighting, advertisement illumination, increasing sign visibility, road lighting and street lamp distribution, our LED Floodlights satisfy a variety of applications.

E361401 RoHS **IP65**

LED FLOOD LIGHT SPECIFICATIONS

Lifetime	≥50,000 hours	**Fixture Dimensioon**	4.52*3.38*3.22 in
Working Environment	-37°C-55°C	**Net Weight**	0.5kg/pc
Working Humidity	≤95%	**Packaging**	24pcs/ctn
CRI	≥75	**Protection Grade**	IP65 wet-Location
Material	Aluminum + Tempered glass	**Warranty**	3 Years
LED Quantity	1PC Integrated Bridgelux SMD LEDs		

LED FLOOD LIGHT PRODUCT OPTIONS LIST

Model No.	Power	Input Voltage	Input Current	Max Lighting Distance	Lumens	Beam Angle	CCT
G2GFL10W	10W	100-240VAC, 50/60Hz	0.04A-0.10A	4.92Ft	900 Lm	120°	3000-3500K 4000-4500K 6000-6500K

LED FLOOD LIGHT DIMENSIONS

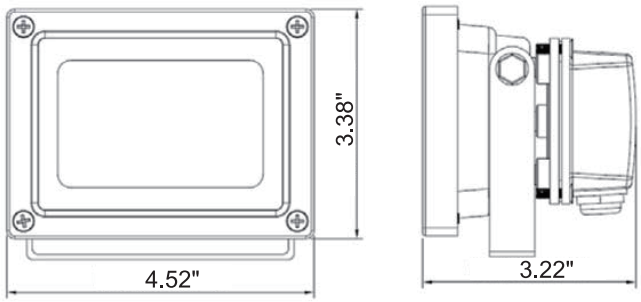

973-575-2600 973-575-2603 1829 Underwood Blvd, Unit 5, Delran Twp, NJ 08075 www.g2glighting.com