G2G LIGHTING

Creating a Greener World

Trident

DF/SF STICK

INSTALLATION GUIDE

T 973 575 2600 F 973 575 2603
www.g2glighting.com 155A 10th St, Passaic. NJ07055

TRIDENT SF/DF INSTALLATION DIAGRAM

Put Trident SF/DF Stick in sign box(or sign cabinet) ,use VHB or screw to fix brackets, both add silicone for fastness and security ,
please pay attention to measure the spacing.(see Figure)

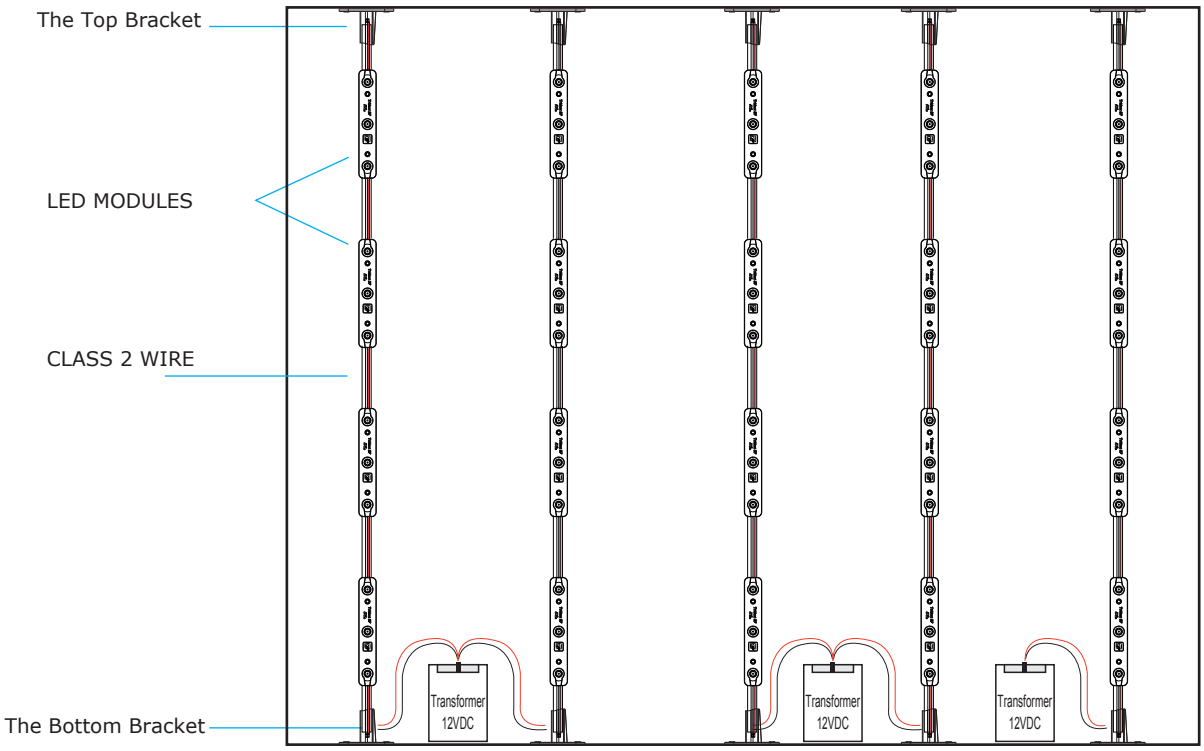

*Use the same way to installation Trident DF too.

Wiring and installation diagram

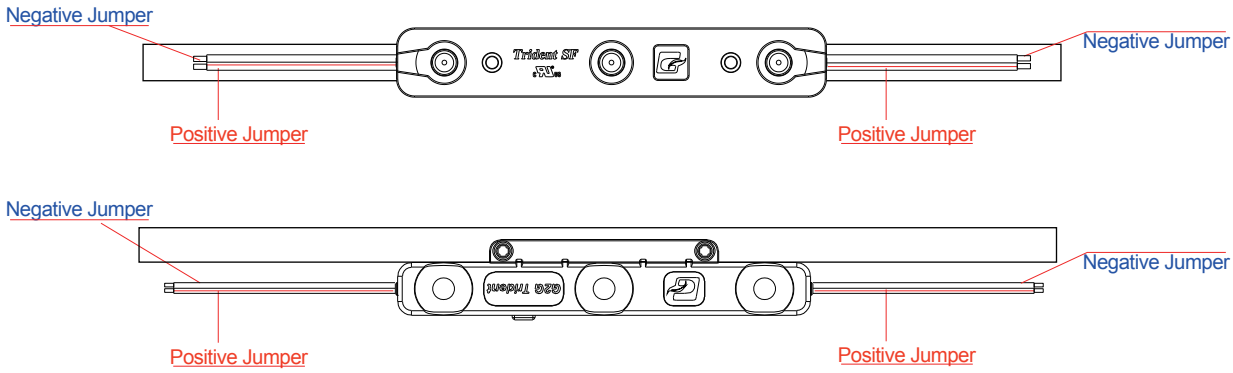

G2G LIGHTING
155A 10th St, Passaic. NJ07055
T 973-575-2600 F 973-575-2603

ALL COMPONENTS c UL us
www.g2glighting.com

WIRING DIAGRAM

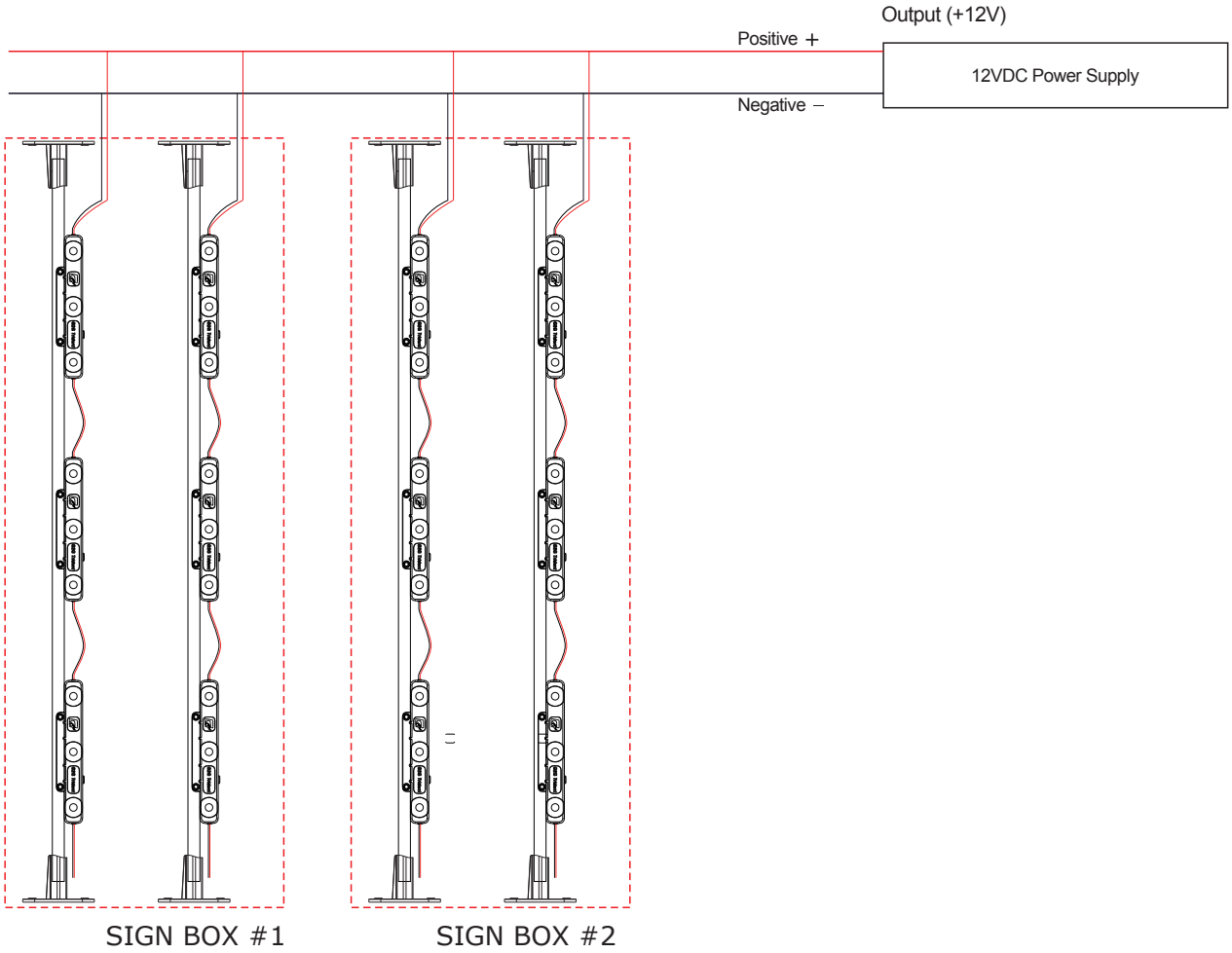

*Use the same way to installation Trident DF too.

155A 10th St, Passaic. NJ07055
T 973-575-2600 F 973-575-2603

ALL COMPONENTS c UL us

www.g2glighting.com

TRIDENT SF/DF STICKS PLICING GUIDE

G2G Trident DF Stick

Regular Size

Part No.	Size	Power Consumption
Trident DF Stick 18IN	386mm (15.2in)	9W
Trident DF Stick 42IN	994mm (39.2in)	18W
Trident DF Stick 64IN	776mmX2 (30.6inX2)	27W
Trident DF Stick 2FT	537.5mm (21.2in)	9W
Trident DF Stick 4FT	1147mm (45.2inX2)	18W
Trident DF Stick 6FT	877mmX2 (34.5inX2)	27W
Trident DF Stick 8FT	1180.5mmX2 (46.5inX2)	36W
Trident DF Stick 10FT	1498mmX2 (59inX2)	45W

Other sizes you can make

Part No.	Size	Power Consumption
Trident DF Stick 3FT	1 FT add on parts + Stick 2FT	13.5W
Trident DF Stick 5FT	1 FT add on parts + Stick 4FT	22.5W
Trident DF Stick 7FT	1 FT add on parts + Stick 6FT	31.5W
Trident DF Stick 9FT	1 FT add on parts + Stick 8FT	40.5W

Additional parts

Part No.	Size	Power Consumption
1 FT add on parts	12IN	4.5W

G2G Trident SF Stick

Regular Size

Part No.	Size	Power Consumption
Trident SF Stick 18IN	386mm (15.2in)	6W
Trident SF Stick 42IN	994mm (39.2in)	12W
Trident SF Stick 64IN	776mmX2 (30.6inX2)	18W
Trident SF Stick 2FT	537.5mm (21.2in)	6W
Trident SF Stick 4FT	1147mm (45.2inX2)	12W
Trident SF Stick 6FT	877mmX2 (34.5inX2)	18W
Trident SF Stick 8FT	1180.5mmX2 (46.5inX2)	24W
Trident SF Stick 10FT	1498mmX2 (59inX2)	30W

Other sizes you can make

Part No.	Size	Power Consumption
Trident SF Stick 3FT	1 FT add on parts + Stick 2FT	9W
Trident SF Stick 5FT	1 FT add on parts + Stick 4FT	15W
Trident SF Stick 7FT	1 FT add on parts + Stick 6FT	21W
Trident SF Stick 9FT	1 FT add on parts + Stick 8FT	27W

Additional parts

Part No.	Size	Power Consumption
1 FT add on parts	12IN	3W

How to make a 5ft

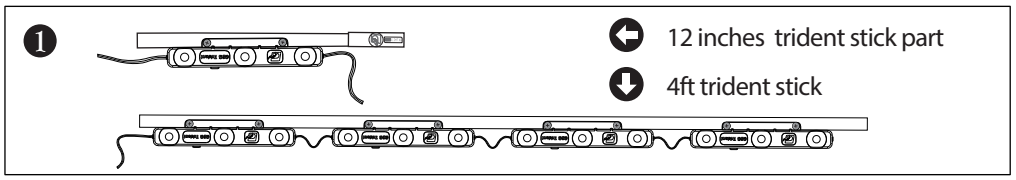

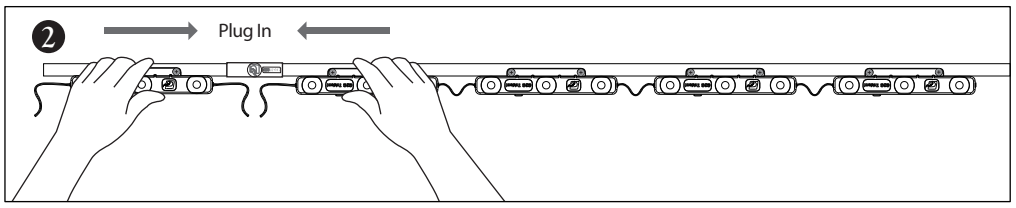

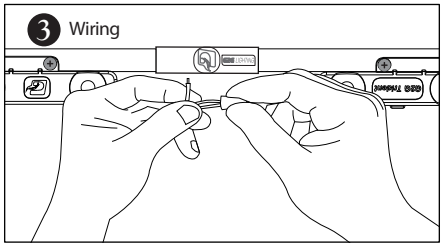

G2G LIGHTING

155A 10th St, Passaic. NJ07055
T 973-575-2600 F 973-575-2603

ALL COMPONENTS c UL us
www.g2glighting.com

RETROFIT INSTALLATION-1

1, CUT OFF POWER SUPPLY 2, TAKE DOWN THE TUBES

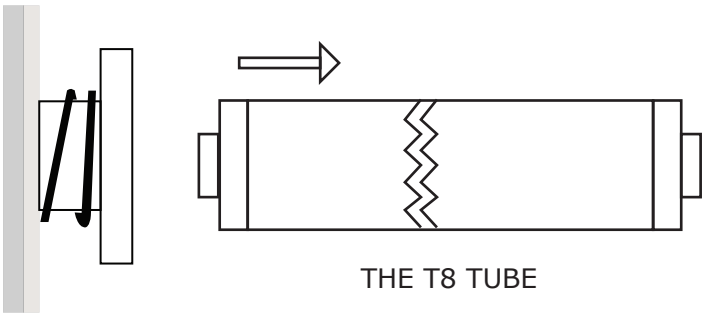

PUT ALUMINUM ROD IN THE MOUNTING HEAD

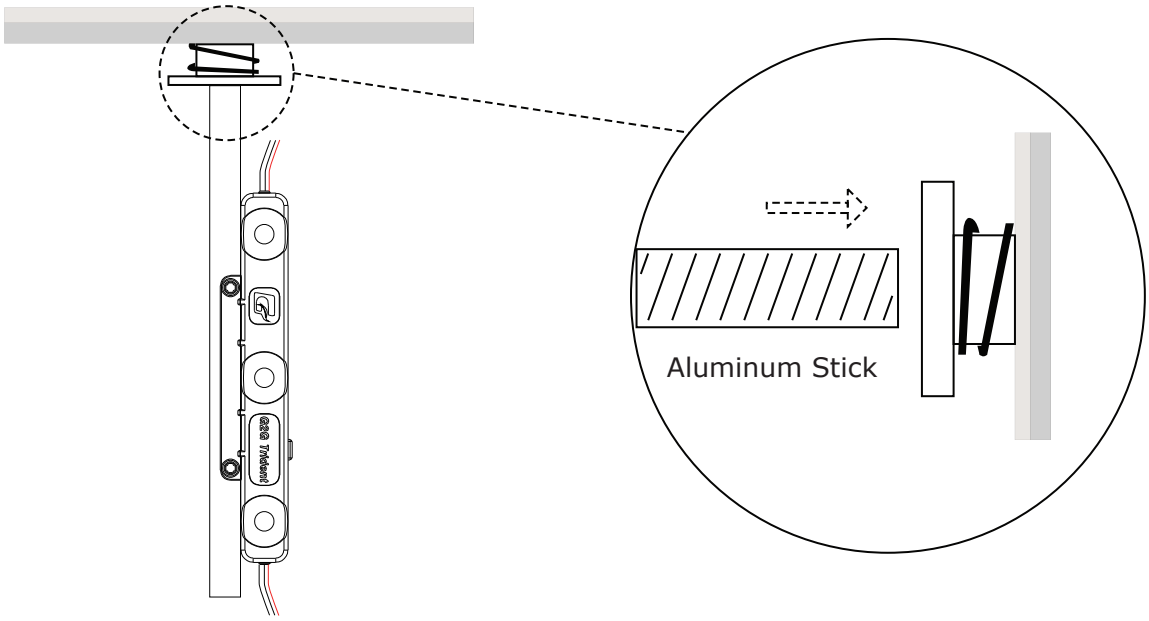

NOT FOR HOME USE AT OVER 600V

RETROFIT INSTALLATION-2

IF THE T8 TUBE'S SUPPORT BASE LIKE "DIAGRAM A"
YOU NEED TO USE HO SOCKETS TO INSTALL TRIDENT DF/SF STICK.

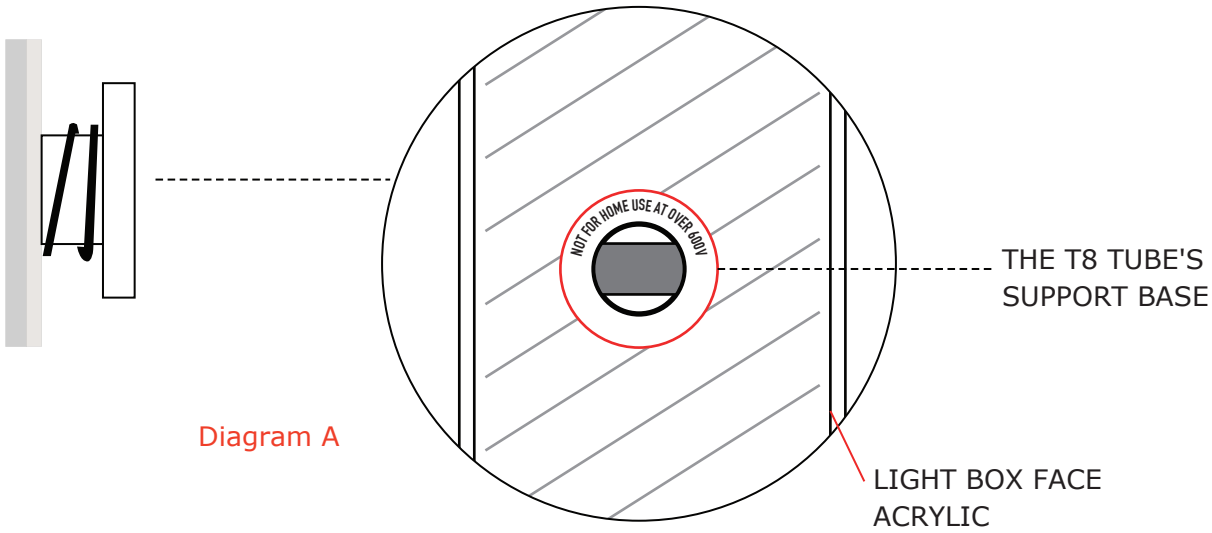

Diagram A

IN THIS CONDITION, YOU CAN MAKE THE TRIDENT STICK DF/SF FACE TO THE ACRYLIC BOARD CORRECTLY WITH THE HO SOCKETS.

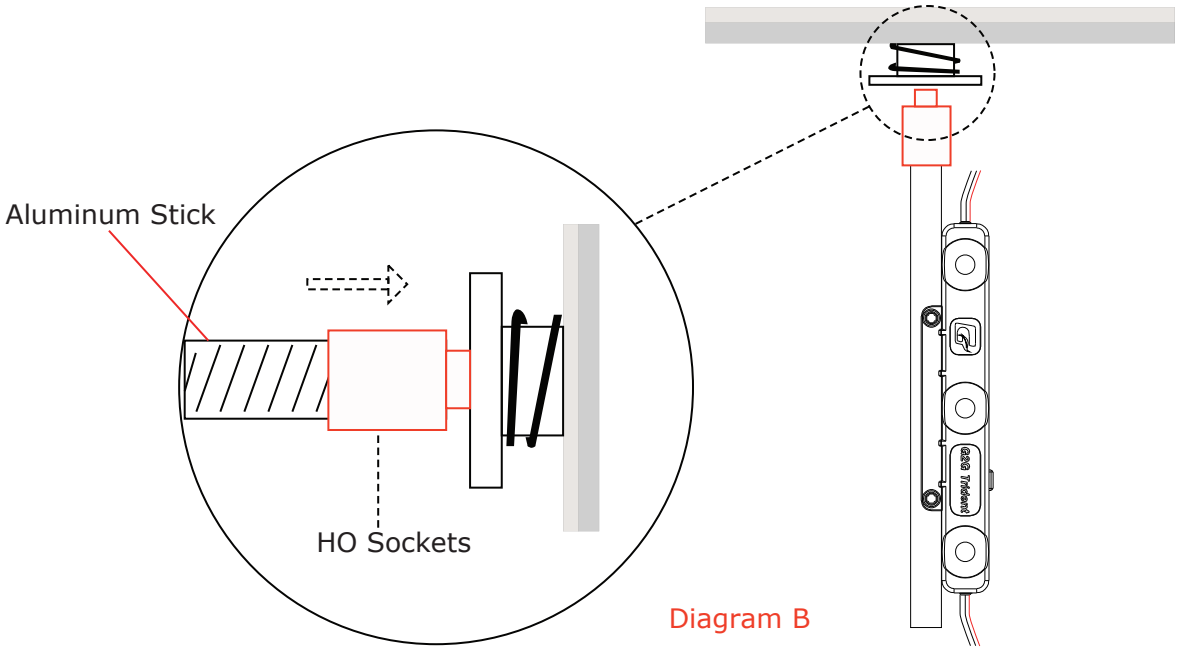

Diagram B

SIGN BOX LIGHTING
G2G LIGHTING

INSTALLATION GUIDE

NEW INSTALLATION

FIX THE UPPER BRACKET AND LOWER BRACKET

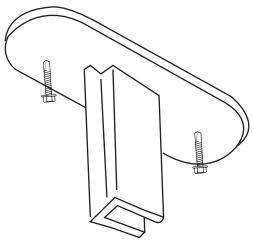

PLEASE PAY MORE ATTENTION TO
THE SPACING WHEN YOU INSTALL IT

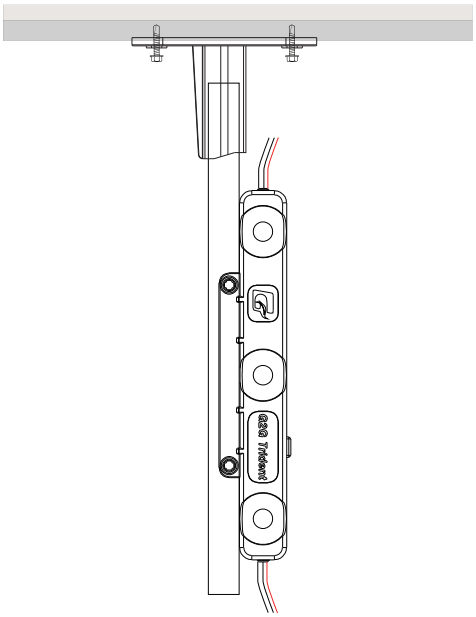

PUT ALUMINUM ROD INTO BRACKET FROM SIDE

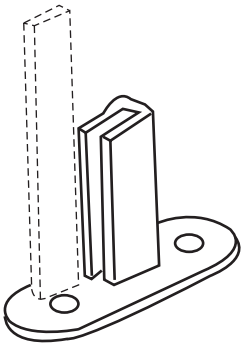

8FT AND 10FT ALUMINUM ROD NEED TO USE THE MIDDLE CONNECTOR

G2G LIGHTING

155A 10th St, Passaic. NJ07055
T 973-575-2600 F 973-575-2603

ALL COMPONENTS c UL us
www.g2glighting.com