NON TOLERANCED DIMENSIONS					
0,5 ...3	> 3 ...6	> 6 ...30	> 30 ..120	>120 ..400	> 400 .1000
± 0,1	± 0,1	± 0,2	± 0,3	± 0,5	± 0,8
RADII, CHAMFERS ± 0,2	± 0,5	± 1	± 1	± 1	± 1

> 50 ...120	> 120 ...400	> 400
20'	± 10'	± 5'

电线材规格图纸

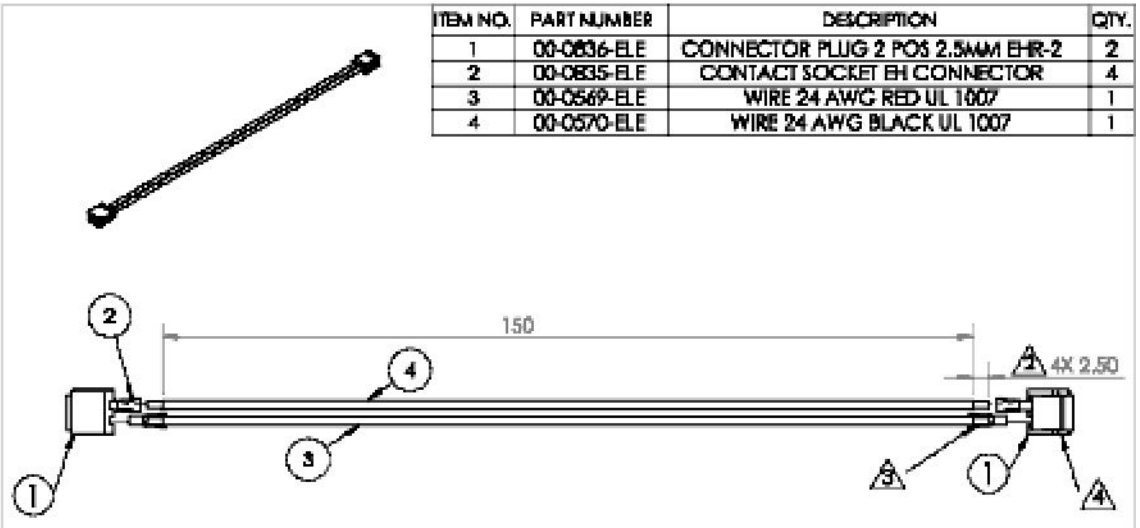

ITEM NO.	PART NUMBER	DESCRIPTION	QTY.
1	00-0836-ELE	CONNECTOR PLUG 2 POS 2.5MM EHR-2	2
2	00-0835-ELE	CONTACT SOCKET EH CONNECTOR	4
3	00-0569-ELE	WIRE 24 AWG RED UL 1007	1
4	00-0570-ELE	WIRE 24 AWG BLACK UL 1007	1

线材规格参数要求:

1. 线材规格: 24AWG UL 1007 2way,150+/-3mm,red/black.
2. 端子型号: CONNECTOR PLUG 2 POS 2.5MM EHR-2,CONTACT SOCKET EH CONNECTOR,
3. 要符合ROHS要求。

Mark	Quantity	Origin or changed	Changed by	Date
A/1				
A/0				

UNLESS OTHERWISE SPECIFICED
ALL DIMENSIONS ARE IN mm
TOLERANCES:
WHOLE ± XX
ANGLE ± XX°
DECIMAL
.X ± 0.1
.XX ± 0.05

DO NOT SCALE DRAWING

FINISH:

TITLE: 电线

DRAWN BY: ZhangCY
DATE: 2016-11-10
MODEL NAME:
DWG. NO.: 1607-E004-00
MODEL NO. 1607
REVISE BY:
DATE
MATERIAL:
FILENAME:
REV. A/0
APPROVED BY:
DATE
SCALE 1:1
SIZE A4

THREEGON

SHEET 1 OF 1