NON TOLERANCED DIMENSIONS					
0.5 ...3	> 3 ...6	> 6 ...30	> 30 ..120	> 120 ..400	> 400 ..1000
± 0,1	± 0,1	± 0,2	± 0,3	± 0,5	± 0,8
RADII, CHAMFERS					
± 0.2	± 0.5	± 1	± 1	± 1	± 1
ANGLES, DIM. OF THE SHORTER SIDE					
bis 10	> 10 ...50	> 50 ...120	> 120 ...400	> 400	
± 1°	± 30'	± 20'	± 10'	± 5'	
TOLERANCES OF FORM AND POSITION					
ISO 2768-H (N13 B92/1)					

EXTERNAL FACES (SHOWN RED) ARE TO HAVE MT11500 TEXTURE APPLIED

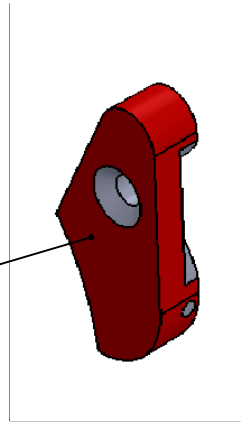

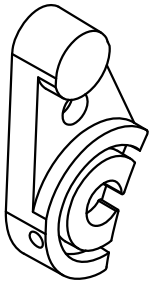

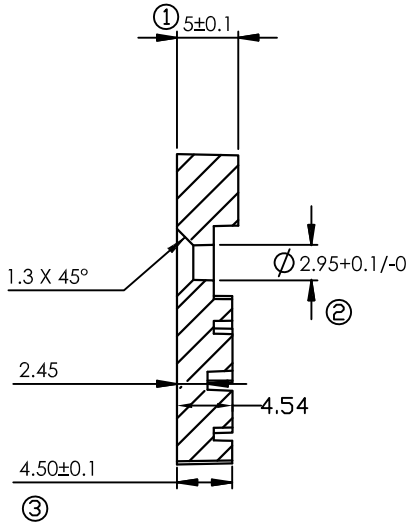

SECTION A-A

SCALE 2 : 1

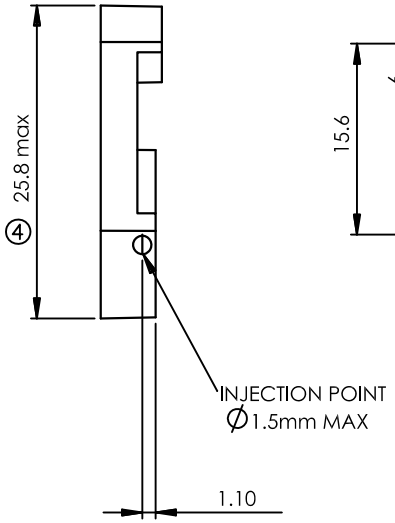

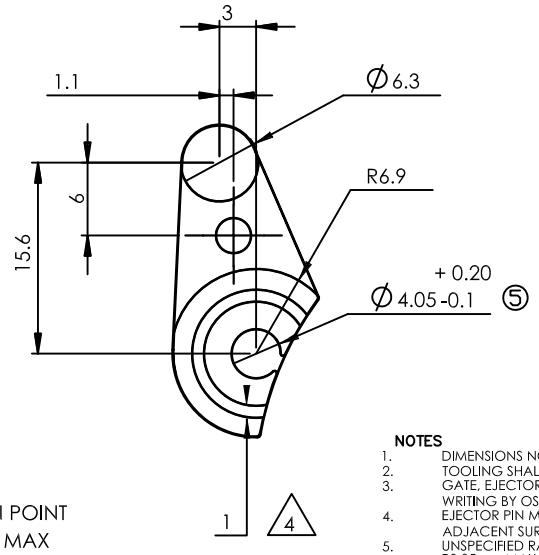

⑥ 与1607-P001-00装配OK

颜色：PANTONE 2925 C

NOTES

1. DIMENSIONS NOT APPEARING ON DRAWING TO BE TAKEN FROM 3D CAD MODEL
2. TOOLING SHALL BE PERMANENTLY MARKED "PROPERTY OF ROBO 3D"
3. GATE, EJECTOR PIN, AND PARTING LINE LOCATIONS SHALL BE APPROVED IN WRITING BY OSDG ENGINEERING.
4. EJECTOR PIN MARKS, PART LINES / INSERT LINES SHALL BE FLUSH TO 0.12mm BELOW ADJACENT SURFACE.
5. UNSPECIFIED RADII SHALL BE R0.20mm MAX. ALL UNSPECIFIED CORNERS, EDGES R0.05mm MAX (SHOWN AS SHARP).
6. FLASH PERMITTED TO 0.05mm MAX
7. DIMENSIONS MARKED WITH * TO BE TUNED AFTER FIRST SAMPLES.
8. ALL MOULDINGS TO BE FREE OF EXCESSIVE: FLASH, SINKS, DRAG MARKS, VOIDS, BLEMISHES, SPLASH MARKS, COLD FRONTS, BURN MARKS
9. ALL MOULDINGS TO BE FREE OF WARPING &/OR TWIST. PARTS NOT TO VARY FROM FLAT BY MORE THAN 0.1mm.
10. PARTS TO BE FREE FROM MOULD RELEASE AGENT.
11. INJECTION POINTS SHOULD BE TRIMMED FLUSH WHERE APPROPRIATE.
12. DRAFT ANGLE 2° MAX PER SIDE UNLESS STATED.
13. (XX.XX) INDICATES KEY INSPECTION DIMENSION.
14. FOR UNDIMENSIONED FEATURES, REFER TO 3D ELECTRONIC FILE - 00-0712-COM.
15. LOCATE NUMERIC CAVITY MARKING WHERE INDICATED

Mark	Quantity	Origin or changed	Changed by	Date

UNLESS OTHERWISE SPECIFICED ALL DIMENSIONS ARE IN mm
TOLERANCES:
WHOLE ± XX ANGLE ± XX°
DECIMAL .X ± 0.1 .XX ± 0.05

DO NOT SCALE DRAWING

FINISH: MT11500

TITLE	支架手臂盖	DWG. NO. :	1607-P002-00/ 00-0712-COM
DRAWN BY: 胡桥养	DATE 2016.11.18	MODEL NAME:	MODEL NO. 1607
REVISE BY:	DATE	MATERIAL: 台化ABS 15A1	FILENAME : REV. A/0
APPROVED BY:	DATE		
SCALE N/A	SIZE A4	THREEGON	SHEET 1 OF 1