NON TOLERANCED DIMENSIONS					
0.5 ...3	> 3 ...6	> 6 ...30	> 30 ..120	> 120 ..400	> 400 ..1000
± 0,1	± 0,1	± 0,2	± 0,3	± 0,5	± 0,8
RADII, CHAMFERS					
± 0.2	± 0.5	± 1	± 1	± 1	± 1
ANGLES, DIM. OF THE SHORTER SIDE					
bis 10	> 10 ...50	> 50 ...120	> 120 ...400	> 400	
± 1°	± 30'	± 20'	± 10'	± 5'	
TOLERANCES OF FORM AND POSITION					
ISO 2768-H (N13 B92/1)					

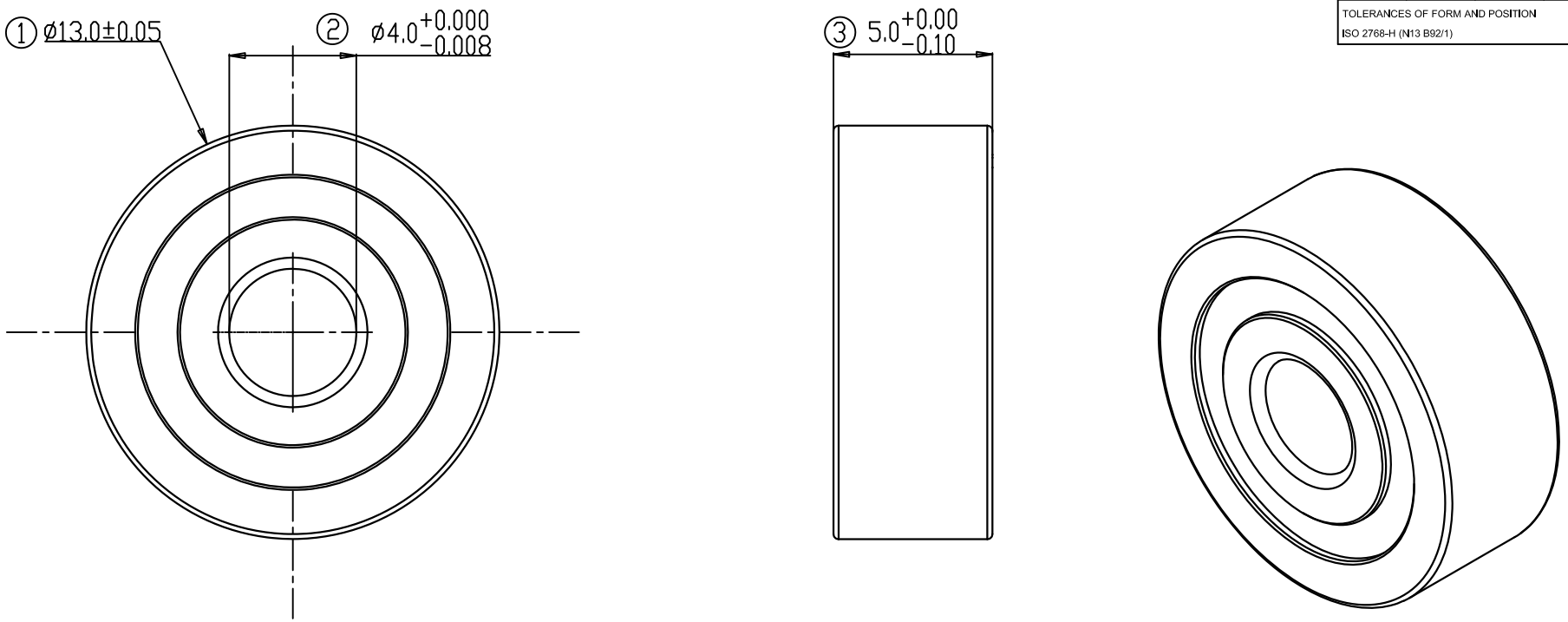

3D VIEW

NOTES:

1. STANDARD PART SUPPLIED FROM SKF BEARINGS (OR SIMILAR)
2. MANUFACTURER PART NUMBER: SKF624

Mark	Quantity	Origin or changed	Changed by	Date

UNLESS OTHERWISE SPECIFICED
ALL DIMENSIONS ARE IN mm
TOLERANCES:
WHOLE ± XX ANGLE ± XX°
DECIMAL
.X ± 0.1
.XX ± 0.05

DO NOT SCALE DRAWING

FINISH:

TITLE	轴承滚珠	DWG. NO. :	1607-M008-00/ 00-0740-HAR
DRAWN BY: 胡桥养	DATE 2016.10.26	MODEL NAME:	MODEL NO. 1607
REVISE BY:	DATE	MATERIAL: ZGCR15型钢	FILENAME : / REV. A/0
APPROVED BY:	DATE		
SCALE N/A	SIZE A4	THREEGON	SHEET 1 OF 1