GENERAL NOTES:
1. MATERIAL: **ALUMINUM, 6061-T651**
2. SPECIAL FINISH: **ANODIZE PER MIL-A-8625F, TYPE II, CLASS 2 (BLACK)**
3. SURFACE ROUGHNESS (UNLESS SPECIFIED OTHERWISE): **63 Ra** (AVERAGE MICRO-INCHES)
4. INTERPRET DIMENSIONS AND TOLERANCES PER ASME Y14.5M-1994
5. DEBURR AND BREAK ALL SHARP EDGES, MAX 0.010" (UNLESS SPECIFIED OTHERWISE)
6. PARTS ARE TO BE CLEAN AND FREE OF OIL, GREASE, AND OTHER CONTAMINANTS
7. DIMENSIONS INCLUDE ANODIZING, ELECTROPLATING, AND CHEMICALLY APPLIED FINISHES IF APPLICABLE

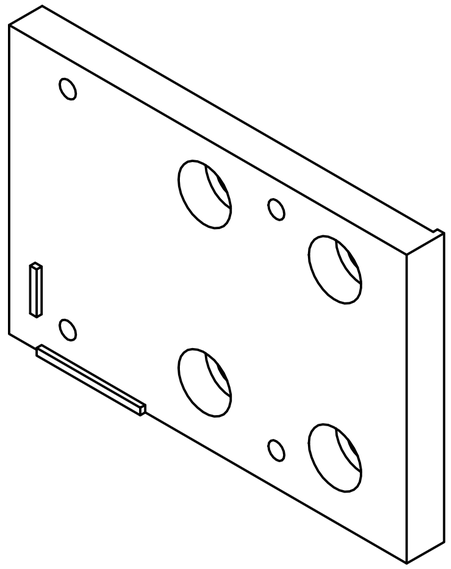

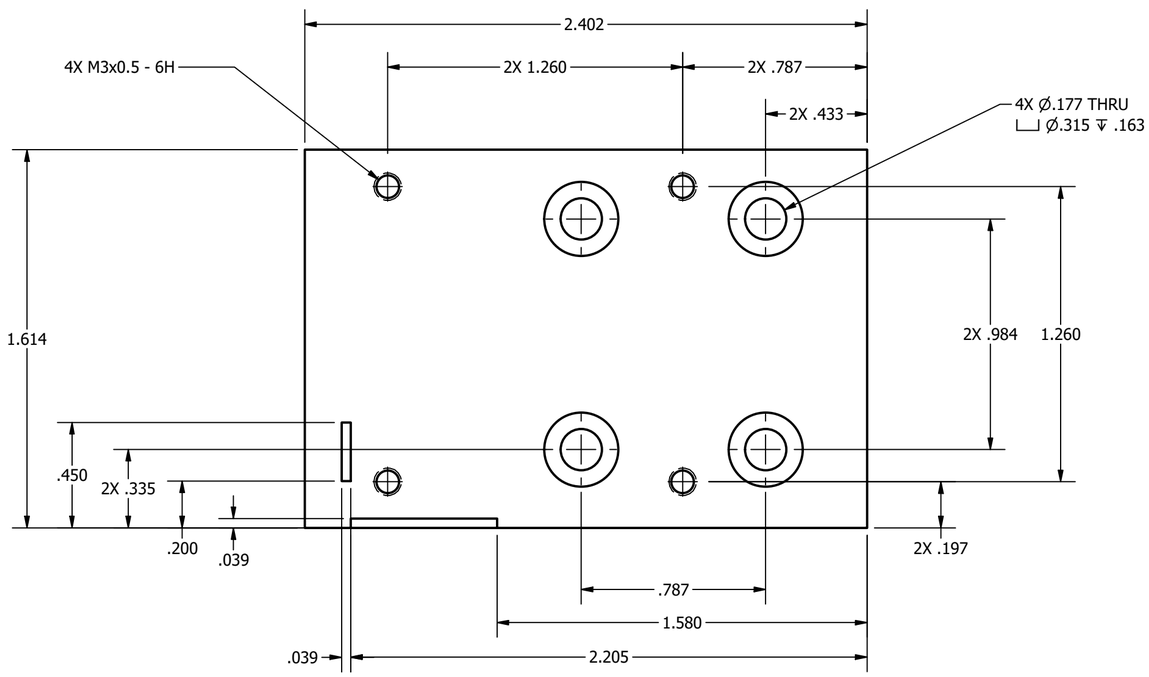

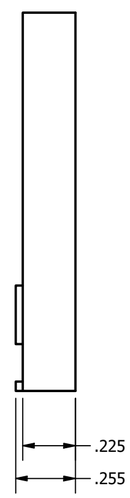

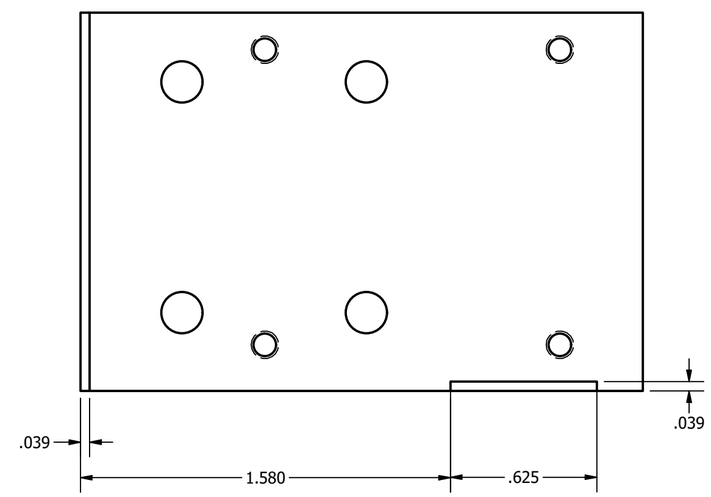

(UNLESS SPECIFIED OTHERWISE)
PRIMARY UNITS: INCHES
[SECONDARY UNITS]: MILLIMETERS

PRIMARY TOLERANCES:

X.X	± 0.020
X.XX	± 0.010
X.XXX	± 0.005
X.XXXX	± 0.0005
ANGULAR	± 0.5 DEG

- DO NOT SCALE DRAWING -

THIRD ANGLE PROJECTION:

© 2025 Allen Institute for Neural Dynamics

615 Westlake Ave N
Seattle, WA 98109, USA
Phone: +1-206-548-7000
www.alleninstitute.org

NP2 GONIO MOUNT PLATE.ipt

SIZE	PART NUMBER	REV	SHEET
C	J010017	-	1 OF 1

CC BY NC SA