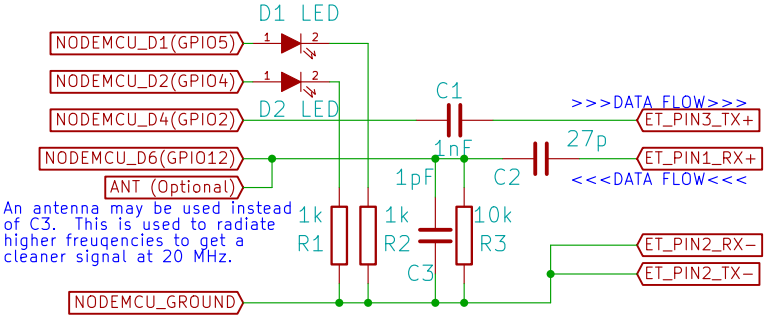

An antenna may be used instead of C3. This is used to radiate higher freuqencies to get a cleaner signal at 20 MHz.

WARNING: Using ethernet without magnetic isolation is dangerous. Do so with caution only once you are absolutely positive the other side of the ethernet is isolated.

WARNING: The ESP will be competing against the serial driver. This will cause degradation in signal and may damage the serial driver.

NOTE: Using ethernet without a driver is fraught with peril.

NOTE: The resistors and capacitors selected here were ones I found happened to kind of work (<60% packet loss) you may find better ones. If you do, please tell me.

CC 3.0 BY
(C) 2016 <>< Charles Lohr

File: nodemcu−ethernet.sch		
Sheet: /		
Title: NodeMCU 10−Base−T Wiring Diagram		
Size: User	Date: 1 apr 2016	Rev: −
KiCad E.D.A.		Id: 1/1