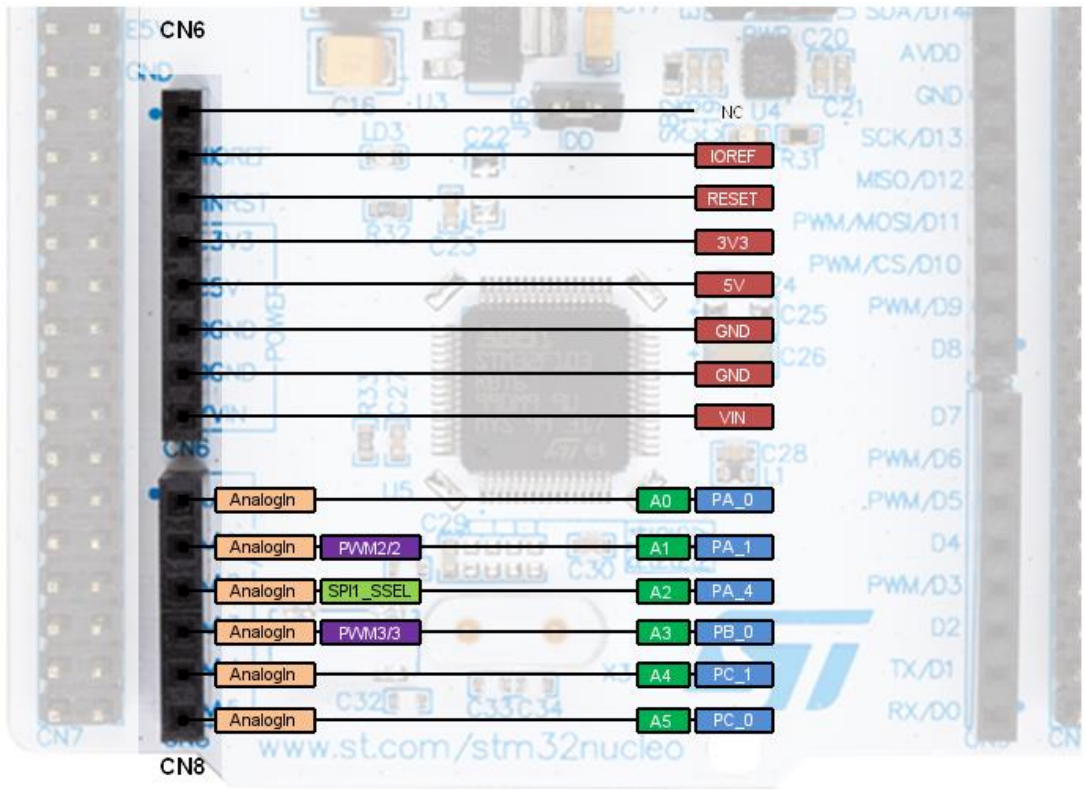
CN6
NC
IOREF
RESET
3V3
5V
GND
GND
VIN
CN6
AnalogIn
A0
PA_0
AnalogIn
PWM2/2
A1
PA_1
AnalogIn
SPI1_SSEL
A2
PA_4
AnalogIn
PWM3/3
A3
PB_0
AnalogIn
A4
PC_1
AnalogIn
A5
PC_0
CN8
www.st.com/stm32nucleo

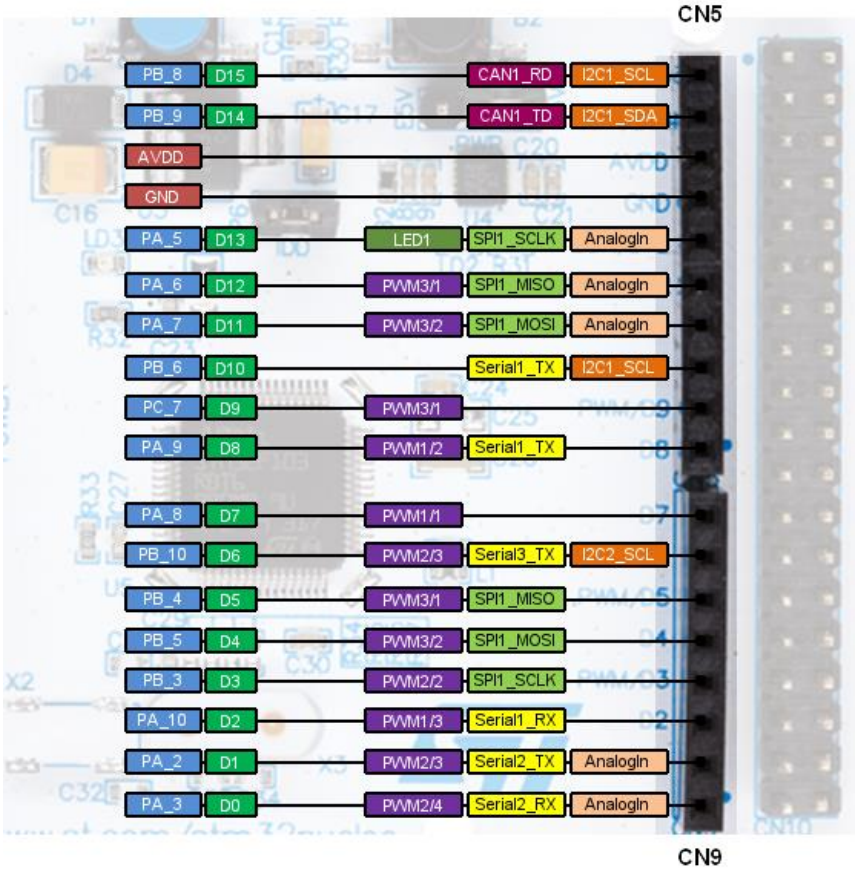
CN5
PB_8
D15
CAN1_RD
I2C1_SCL
PB_9
D14
CAN1_TD
I2C1_SDA
AVDD
GND
PA_5
D13
LED1
SPI1_SCLK
AnalogIn
PA_6
D12
PWM3/1
SPI1_MISO
AnalogIn
PA_7
D11
PWM3/2
SPI1_MOSI
AnalogIn
PB_6
D10
Serial1_TX
I2C1_SCL
PC_7
D9
PWM3/1
PA_9
D8
PWM1/2
Serial1_TX
PA_8
D7
PWM1/1
PB_10
D6
PWM2/3
Serial3_TX
I2C2_SCL
PB_4
D5
PWM3/1
SPI1_MISO
PB_5
D4
PWM3/2
SPI1_MOSI
PB_3
D3
PWM2/2
SPI1_SCLK
PA_10
D2
PWM1/3
Serial1_RX
PA_2
D1
PWM2/3
Serial2_TX
AnalogIn
PA_3
D0
PWM2/4
Serial2_RX
AnalogIn
CN9

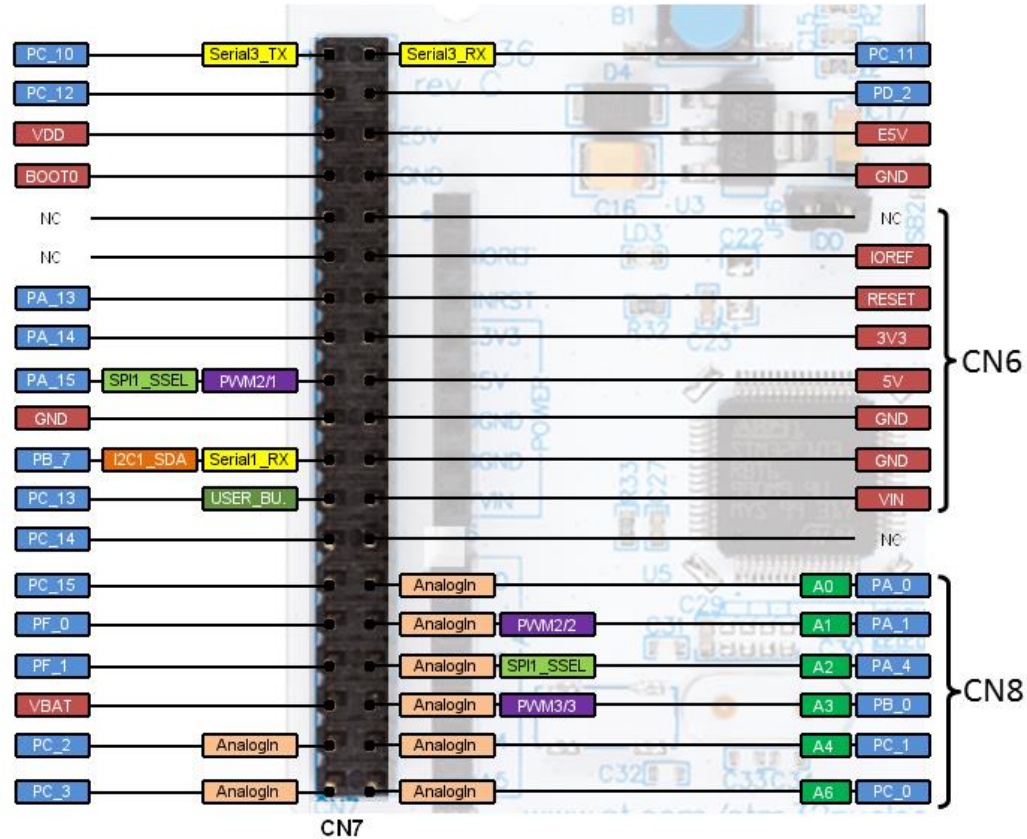
PC_10
Serial3_TX
Serial3_RX
PC_11
PC_12
PD_2
VDD
E5V
BOOT0
GND
NC
NC
NC
IOREF
PA_13
RESET
PA_14
3V3
PA_15
SPI1_SSEL
PWM2/1
5V
GND
GND
PB_7
I2C1_SDA
Serial1_RX
GND
PC_13
USER_BU.
VIN
PC_14
NC
CN6
PC_15
AnalogIn
A0
PA_0
PF_0
AnalogIn
PWM2/2
A1
PA_1
PF_1
AnalogIn
SPI1_SSEL
A2
PA_4
VBAT
AnalogIn
PWM3/3
A3
PB_0
PC_2
AnalogIn
AnalogIn
A4
PC_1
PC_3
AnalogIn
AnalogIn
A6
PC_0
CN8
CN7

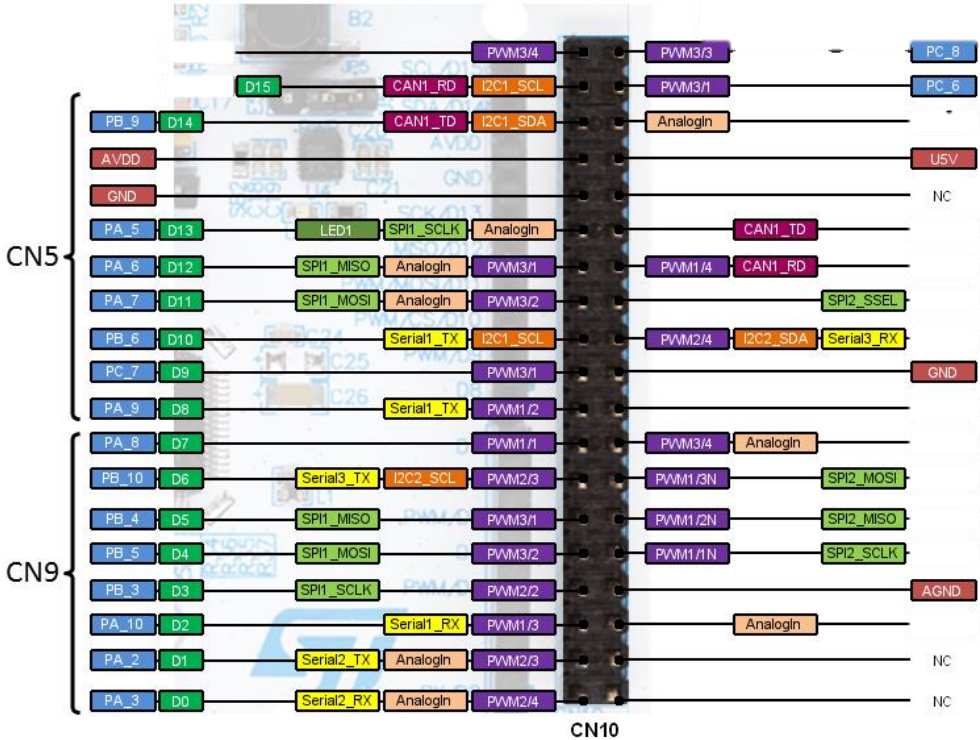
PWM3/4
PWM3/3
PC_8
D15
CAN1_RD
I2C1_SCL
PWM3/1
PC_6
PB_9
D14
CAN1_TD
I2C1_SDA
AnalogIn
AVDD
U5V
GND
NC
PA_5
D13
LED1
SPI1_SCLK
AnalogIn
CAN1_TD
PA_6
D12
SPI1_MISO
AnalogIn
PWM3/1
PWM1/4
CAN1_RD
PA_7
D11
SPI1_MOSI
AnalogIn
PWM3/2
SPI2_SSEL
PB_6
D10
Serial1_TX
I2C1_SCL
PWM2/4
I2C2_SDA
Serial3_RX
PC_7
D9
PWM3/1
GND
PA_9
D8
Serial1_TX
PWM1/2
CN5
PA_8
D7
PWM1/1
PWM3/4
AnalogIn
PB_10
D6
Serial3_TX
I2C2_SCL
PWM2/3
PWM1/3N
SPI2_MOSI
PB_4
D5
SPI1_MISO
PWM3/1
PWM1/2N
SPI2_MISO
PB_5
D4
SPI1_MOSI
PWM3/2
PWM1/1N
SPI2_SCLK
PB_3
D3
SPI1_SCLK
PWM2/2
AGND
PA_10
D2
Serial1_RX
PWM1/3
AnalogIn
PA_2
D1
Serial2_TX
AnalogIn
PWM2/3
NC
PA_3
D0
Serial2_RX
AnalogIn
PWM2/4
NC
CN9
CN10