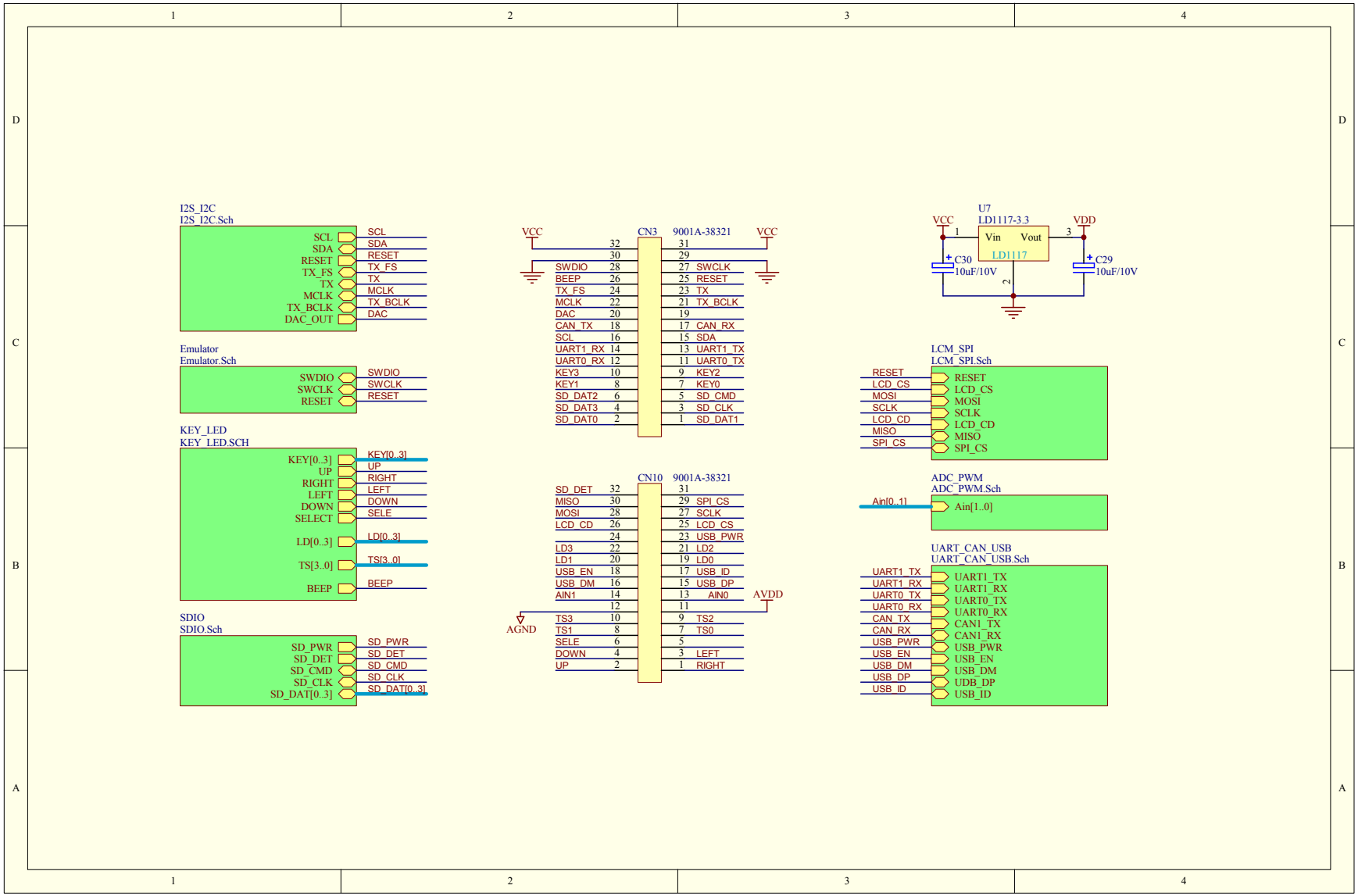
I2S_I2C
I2S_I2C.Sch
SCL
SDA
RESET
TX_FS
TX
MCLK
TX_BCLK
DAC_OUT
Emulator
Emulator.Sch
SWDIO
SWCLK
RESET
KEY_LED
KEY_LED.SCH
KEY[0..3]
UP
RIGHT
LEFT
DOWN
SELECT
LD[0..3]
TS[3..0]
BEEP
SDIO
SDIO.Sch
SD_PWR
SD_DET
SD_CMD
SD_CLK
SD_DAT[0..3]
VCC
CN3
9001A-38321
SWDIO 28
BEEP 26
TX_FS 24
MCLK 22
DAC 20
CAN_TX 18
SCL 16
UART1_RX 14
UART0_RX 12
KEY3 10
KEY1 8
SD_DAT2 6
SD_DAT3 4
SD_DAT0 2
32
30
31
29
27 SWCLK
25 RESET
23 TX
21 TX_BCLK
19
17 CAN_RX
15 SDA
13 UART1_TX
11 UART0_TX
9 KEY2
7 KEY0
5 SD_CMD
3 SD_CLK
1 SD_DAT1
CN10
9001A-38321
SD_DET 32
MISO 30
MOSI 28
LCD_CD 26
24
LD3 22
LD1 20
USB_EN 18
USB_DM 16
AIN1 14
12
TS3 10
TS1 8
SELE 6
DOWN 4
UP 2
31
29 SPI_CS
27 SCLK
25 LCD_CS
23 USB_PWR
21 LD2
19 LD0
17 USB_ID
15 USB_DP
13 AIN0
11
9 TS2
7 TS0
5
3 LEFT
1 RIGHT
AGND
AVDD
U7
LD1117-3.3
Vin
Vout
LD1117
VDD
C30
10uF/10V
C29
10uF/10V
LCM_SPI
LCM_SPI.Sch
RESET
LCD_CS
MOSI
SCLK
LCD_CD
MISO
SPI_CS
ADC_PWM
ADC_PWM.Sch
Ain[0..1]
Ain[1..0]
UART_CAN_USB
UART_CAN_USB.Sch
UART1_TX
UART1_RX
UART0_TX
UART0_RX
CAN_TX
CAN_RX
USB_PWR
USB_EN
USB_DM
USB_DP
USB_ID
CAN1_TX
CAN1_RX
UDB_DP

ADC & PWM LED

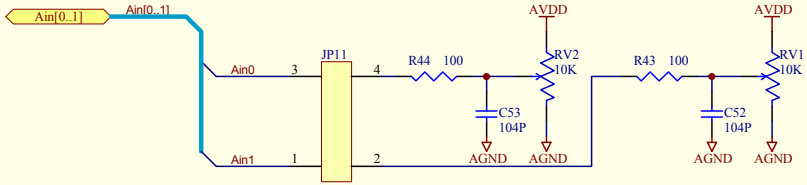
Ain[0..1]
Ain[0..1]
Ain0
Ain1
JP11
3
1
4
2
R44 100
R43 100
C53
104P
C52
104P
AGND
AGND
AGND
AGND
AVDD
AVDD
RV2
10K
RV1
10K

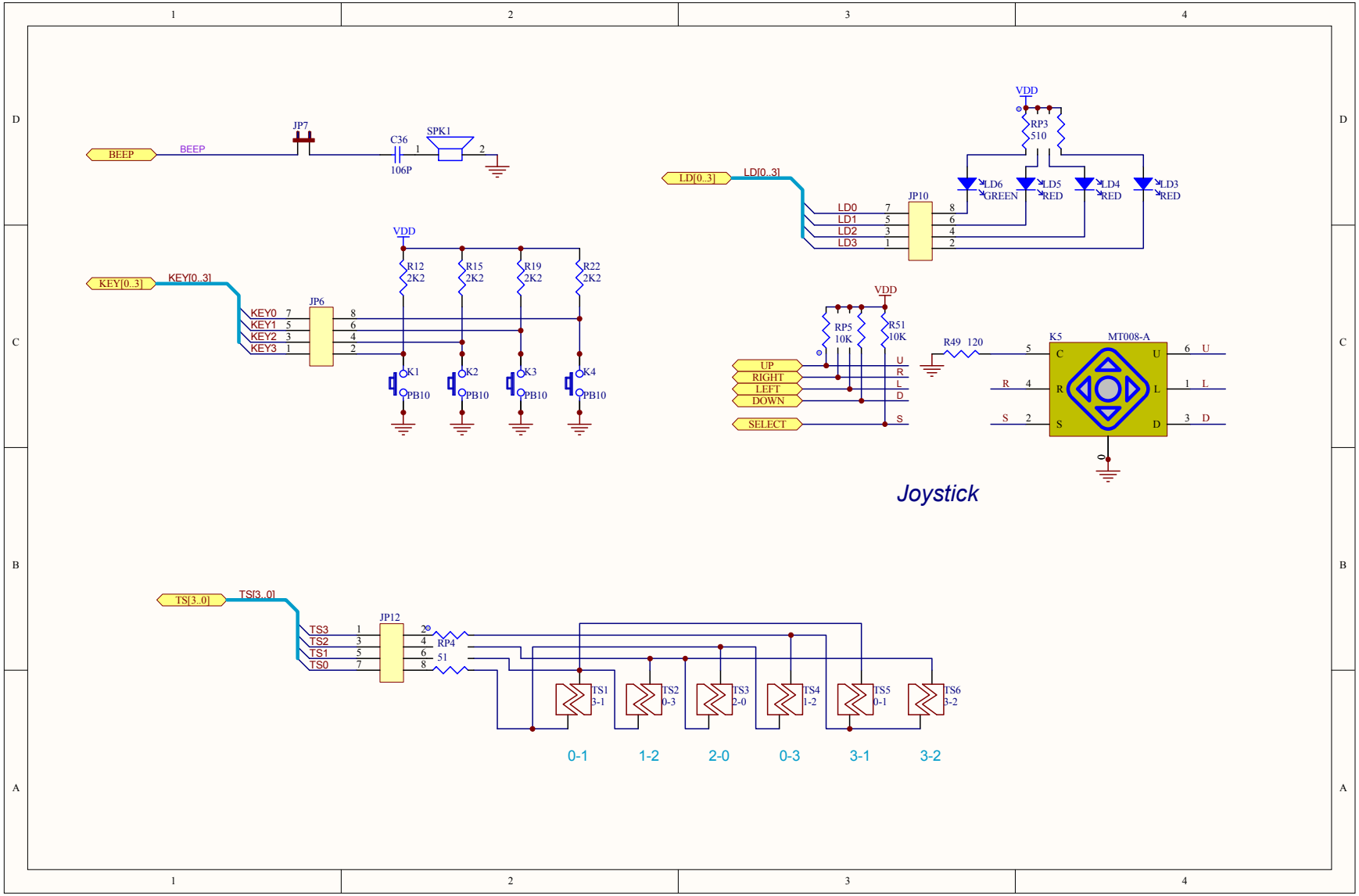
BEEP
JP7
C36
106P
SPK1
VDD
RP3
510
LD6
GREEN
LD5
RED
LD4
RED
LD3
RED
LD[0..3]
JP10
LD0
LD1
LD2
LD3
KEY[0..3]
JP6
KEY0
KEY1
KEY2
KEY3
R12
2K2
R15
2K2
R19
2K2
R22
2K2
K1
K2
K3
K4
PB10
RP5
10K
R51
10K
UP
RIGHT
LEFT
DOWN
SELECT
R49 120
K5
MT008-A
Joystick
TS[3..0]
JP12
TS3
TS2
TS1
TS0
RP4
51
TS1
3-1
TS2
0-3
TS3
2-0
TS4
1-2
TS5
0-1
TS6
3-2
0-1
1-2
2-0
0-3
3-1
3-2

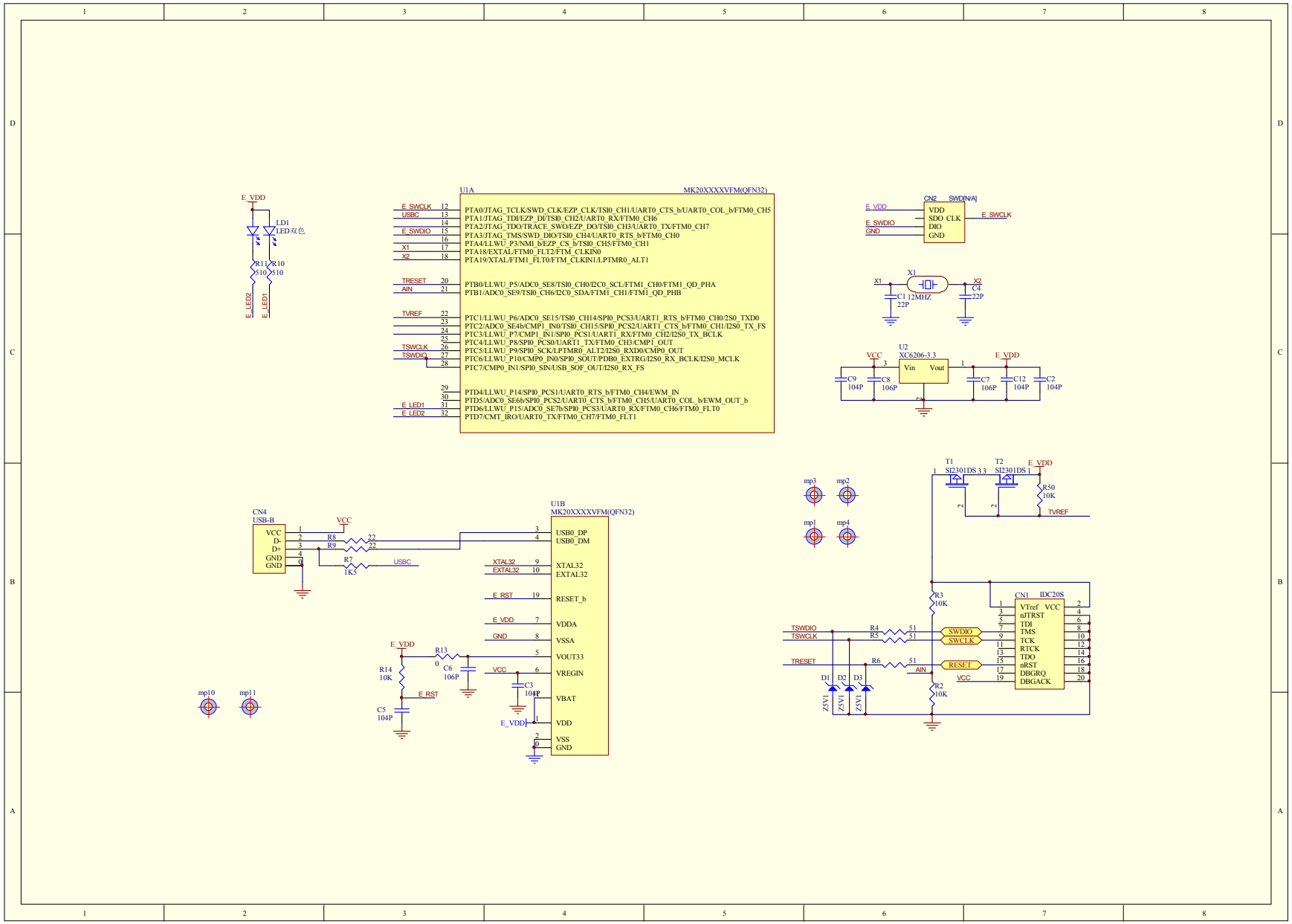
E_VDD
LD1
LED双色
R11 510
R10 510
E_LED2
E_LED1
U1A
MK20XXXXVFM(QFN32)
E_SWCLK 12 PTA0/JTAG_TCLK/SWD_CLK/EZP_CLK/TSI0_CH1/UART0_CTS_b/UART0_COL_b/FTM0_CH5
USBC 13 PTA1/JTAG_TDI/EZP_DI/TSI0_CH2/UART0_RX/FTM0_CH6
14 PTA2/JTAG_TDO/TRACE_SWO/EZP_DO/TSI0_CH3/UART0_TX/FTM0_CH7
E_SWDIO 15 PTA3/JTAG_TMS/SWD_DIO/TSI0_CH4/UART0_RTS_b/FTM0_CH0
16 PTA4/LLWU_P3/NMI_b/EZP_CS_b/TSI0_CH5/FTM0_CH1
X1 17 PTA18/EXTAL/FTM0_FLT2/FTM_CLKIN0
X2 18 PTA19/XTAL/FTM1_FLT0/FTM_CLKIN1/LPTMR0_ALT1
TRESET 20 PTB0/LLWU_P5/ADC0_SE8/TSI0_CH0/I2C0_SCL/FTM1_CH0/FTM1_QD_PHA
AIN 21 PTB1/ADC0_SE9/TSI0_CH6/I2C0_SDA/FTM1_CH1/FTM1_QD_PHB
TVREF 22 PTC1/LLWU_P6/ADC0_SE15/TSI0_CH14/SPI0_PCS3/UART1_RTS_b/FTM0_CH0/2S0_TXD0
23 PTC2/ADC0_SE4b/CMP1_IN0/TSI0_CH15/SPI0_PCS2/UART1_CTS_b/FTM0_CH1/I2S0_TX_FS
24 PTC3/LLWU_P7/CMP1_IN1/SPI0_PCS1/UART1_RX/FTM0_CH2/I2S0_TX_BCLK
25 PTC4/LLWU_P8/SPI0_PCS0/UART1_TX/FTM0_CH3/CMP1_OUT
TSWCLK 26 PTC5/LLWU_P9/SPI0_SCK/LPTMR0_ALT2/I2S0_RXD0/CMP0_OUT
TSWDIO 27 PTC6/LLWU_P10/CMP0_IN0/SPI0_SOUT/PDB0_EXTRG/I2S0_RX_BCLK/I2S0_MCLK
28 PTC7/CMP0_IN1/SPI0_SIN/USB_SOF_OUT/I2S0_RX_FS
29 PTD4/LLWU_P14/SPI0_PCS1/UART0_RTS_b/FTM0_CH4/EWM_IN
30 PTD5/ADC0_SE6b/SPI0_PCS2/UART0_CTS_b/FTM0_CH5/UART0_COL_b/EWM_OUT_b
E_LED1 31 PTD6/LLWU_P15/ADC0_SE7b/SPI0_PCS3/UART0_RX/FTM0_CH6/FTM0_FLT0
E_LED2 32 PTD7/CMT_IRO/UART0_TX/FTM0_CH7/FTM0_FLT1
CN2 SWD[N/A]
E_VDD
E_SWDIO
GND
VDD
SDO CLK
DIO
GND
E_SWCLK
X1
X2
C1 22P
12MHZ
C4 22P
U2
XC6206-3.3
VCC
Vin
Vout
E_VDD
C9 104P
C8 106P
C7 106P
C12 104P
C2 104P
CN4
USB-B
VCC
D-
D+
GND
GND
R8 22
R9 22
R7 1K5
USBC
U1B
MK20XXXXVFM(QFN32)
USB0_DP
USB0_DM
XTAL32
EXTAL32
RESET_b
VDDA
VSSA
VOUT33
VREGIN
VBAT
VDD
VSS
GND
E_RST
R13 0
C6 106P
R14 10K
C5 104P
C3 104P
mp10
mp11
mp3
mp2
mp1
mp4
T1 SI2301DS
T2 SI2301DS
R50 10K
TVREF
R3 10K
R2 10K
CN1 IDC20S
VTref VCC
nJTRST
TDI
TMS
TCK
RTCK
TDO
nRST
DBGIRQ
DBGACK
TSWDIO
TSWCLK
TRESET
R4 51
R5 51
R6 51
SWDIO
SWCLK
RESET
AIN
D1 ZSV1
D2 ZSV1
D3 ZSV1

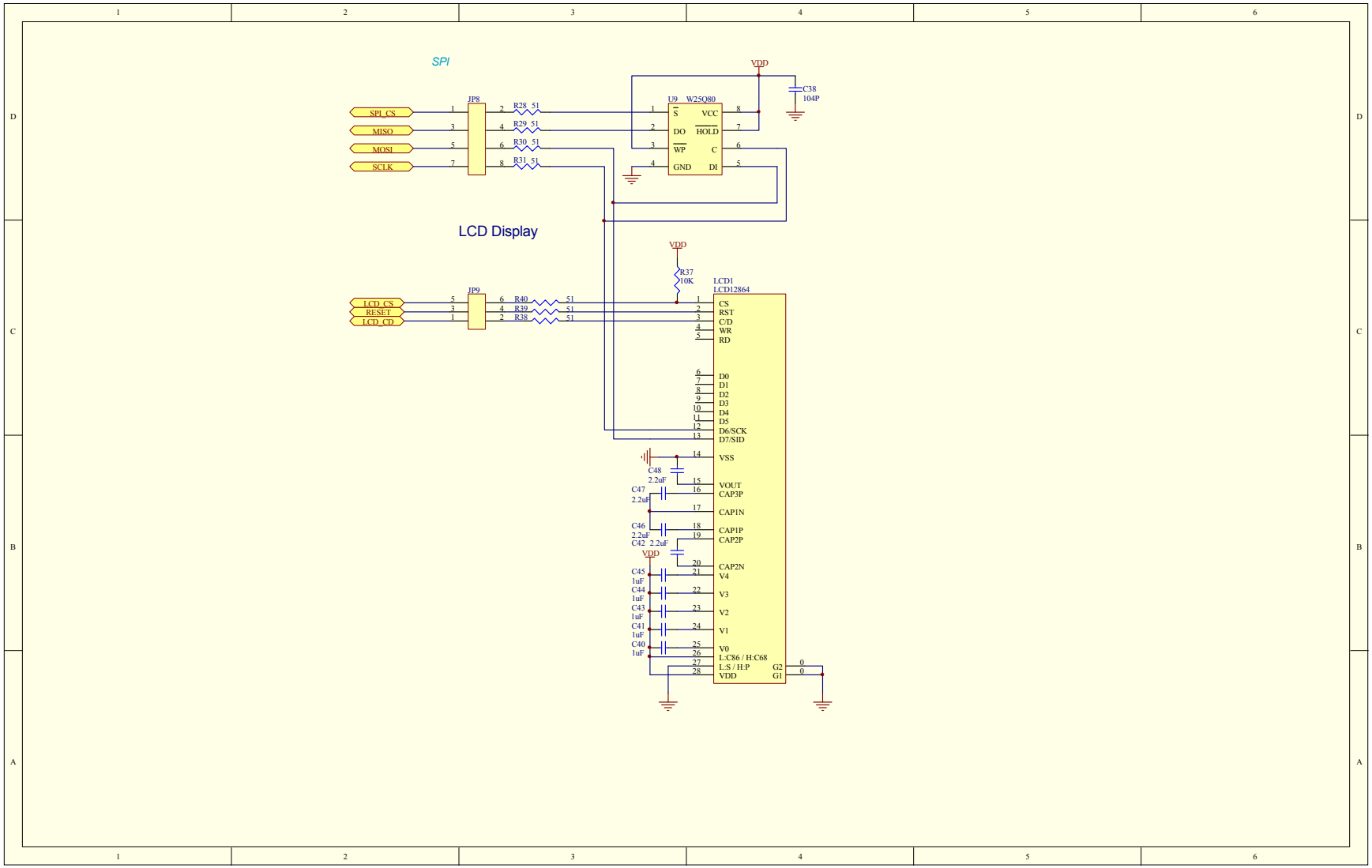
SPI
VDD
C38
104P
JP8
SPI_CS
MISO
MOSI
SCLK
R28 51
R29 51
R30 51
R31 51
U9 W25Q80
S
DO
WP
GND
VCC
HOLD
C
DI
LCD Display
VDD
R37
10K
JP9
LCD_CS
RESET
LCD_CD
R40 51
R39 51
R38 51
LCD1
LCD12864
CS
RST
C/D
WR
RD
D0
D1
D2
D3
D4
D5
D6/SCK
D7/SID
VSS
C48
2.2uF
VOUT
CAP3P
C47
2.2uF
CAP1N
C46
2.2uF
CAP1P
C42 2.2uF
CAP2P
VDD
CAP2N
C45
1uF
V4
C44
1uF
V3
C43
1uF
V2
C41
1uF
V1
C40
1uF
V0
L:C86 / H:C68
L:S / H:P
VDD
G2
G1
0
0

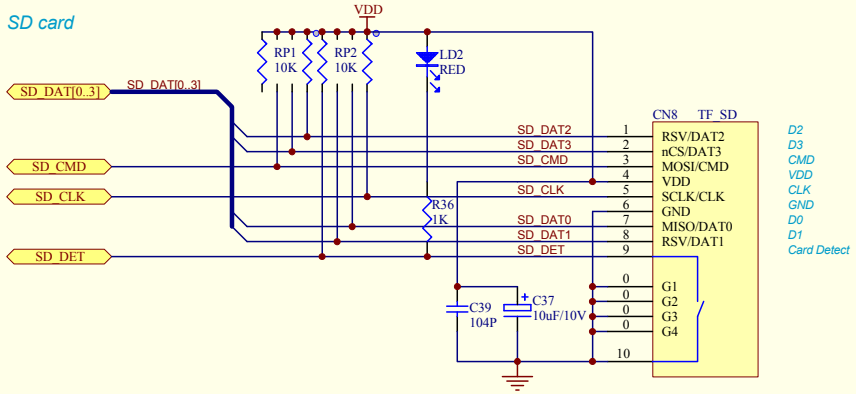
SD card
VDD
RP1
10K
RP2
10K
LD2
RED
SD_DAT[0..3]
SD_DAT[0..3]
SD_CMD
SD_CLK
SD_DET
R36
1K
C39
104P
C37
10uF/10V
CN8 TF_SD
SD_DAT2
SD_DAT3
SD_CMD
SD_CLK
SD_DAT0
SD_DAT1
SD_DET
1
2
3
4
5
6
7
8
9
0
0
0
0
10
RSV/DAT2
nCS/DAT3
MOSI/CMD
VDD
SCLK/CLK
GND
MISO/DAT0
RSV/DAT1
G1
G2
G3
G4
D2
D3
CMD
VDD
CLK
GND
D0
D1
Card Detect

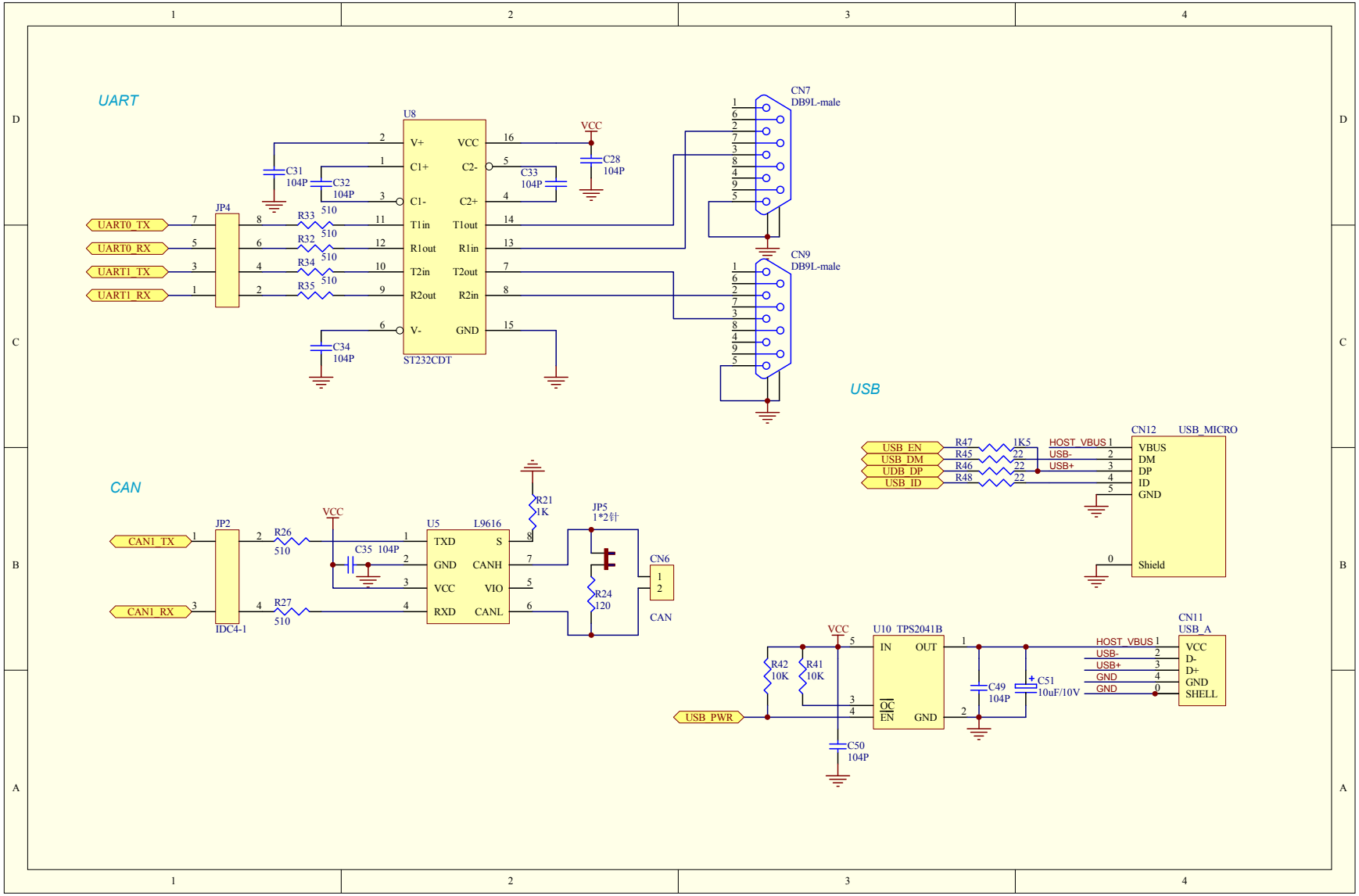
UART
U8
ST232CDT
V+
VCC
C1+
C2-
C1-
C2+
T1in
T1out
R1out
R1in
T2in
T2out
R2out
R2in
V-
GND
VCC
C28
104P
C31
104P
C32
104P
C33
104P
C34
104P
JP4
UART0_TX
UART0_RX
UART1_TX
UART1_RX
R33
R32
R34
R35
510
CN7
DB9L-male
CN9
DB9L-male
CAN
JP2
IDC4-1
CAN1_TX
CAN1_RX
R26
R27
510
C35 104P
U5
L9616
TXD
S
GND
CANH
VCC
VIO
RXD
CANL
R21
1K
JP5
1*2针
R24
120
CN6
CAN
USB
CN12
USB_MICRO
USB_EN
USB_DM
UDB_DP
USB_ID
R47
R45
R46
R48
1K5
22
HOST_VBUS
USB-
USB+
VBUS
DM
DP
ID
GND
Shield
U10 TPS2041B
IN
OUT
OC
EN
GND
R42
10K
R41
10K
C50
104P
C49
104P
C51
10uF/10V
USB_PWR
CN11
USB_A
VCC
D-
D+
GND
SHELL

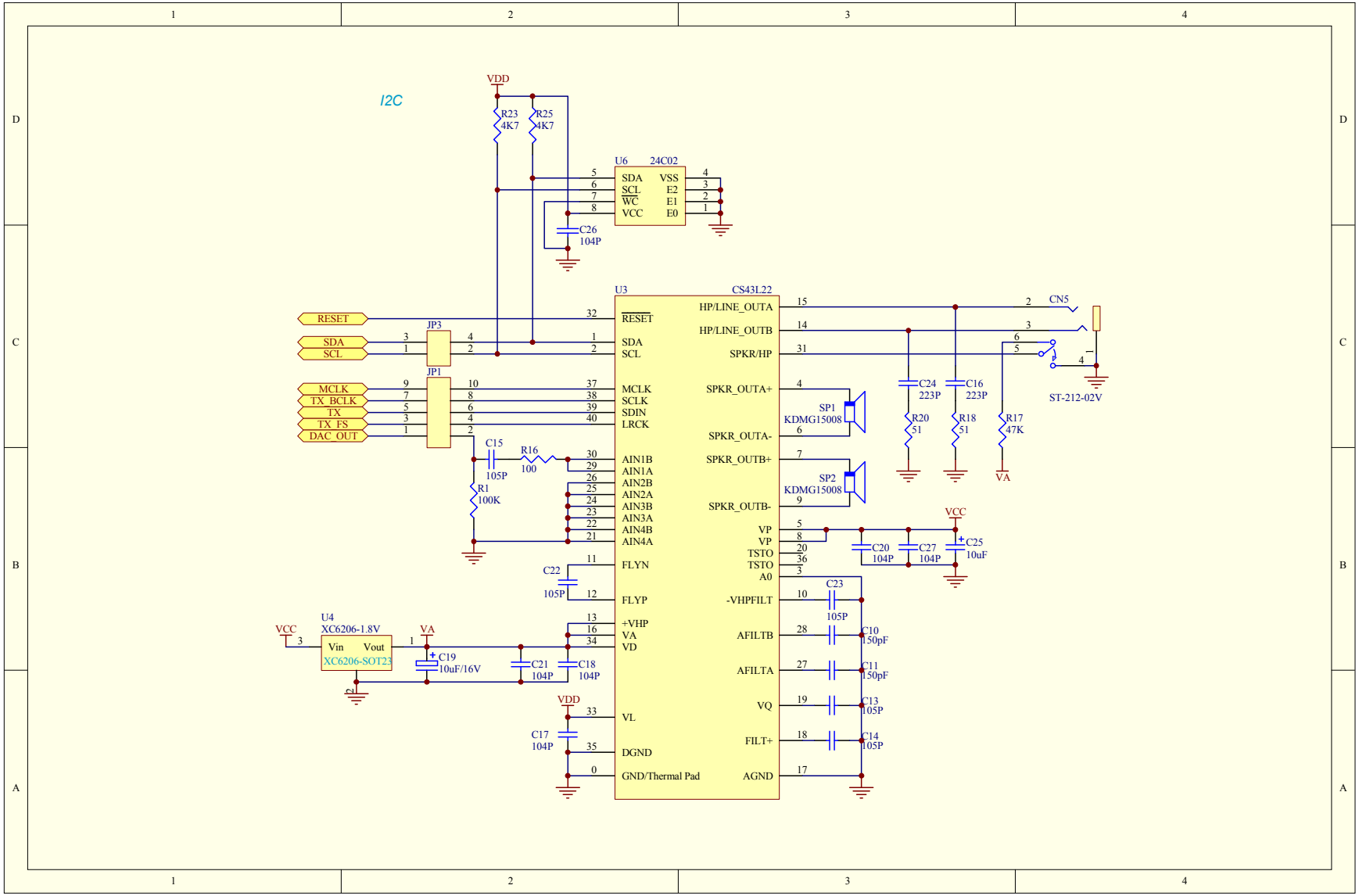
I2C
VDD
R23
4K7
R25
4K7
U6
24C02
SDA
SCL
WC
VCC
VSS
E2
E1
E0
C26
104P
U3
CS43L22
RESET
SDA
SCL
JP3
JP1
MCLK
TX_BCLK
TX
TX_FS
DAC_OUT
C15
105P
R16
100
R1
100K
AIN1B
AIN1A
AIN2B
AIN2A
AIN3B
AIN3A
AIN4B
AIN4A
FLYN
FLYP
C22
105P
+VHP
VA
VD
VL
DGND
GND/Thermal Pad
HP/LINE_OUTA
HP/LINE_OUTB
SPKR/HP
SPKR_OUTA+
SPKR_OUTA-
SPKR_OUTB+
SPKR_OUTB-
VP
TSTO
A0
-VHPFILT
AFILTB
AFILTA
VQ
FILT+
AGND
SP1
KDMG15008
SP2
KDMG15008
C24
223P
C16
223P
R20
51
R18
51
R17
47K
CN5
ST-212-02V
VCC
C20
104P
C27
104P
C25
10uF
C23
105P
C10
150pF
C11
150pF
C13
105P
C14
105P
U4
XC6206-1.8V
Vin
Vout
XC6206-SOT23
C19
10uF/16V
C21
104P
C18
104P
C17
104P