零点净化器说明书

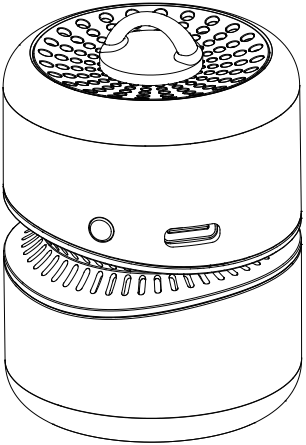

RH48

感谢您购买本公司产品
使用前请仔细阅读使用说明书

产品参数

1.产品名称：零点空气净化器
2.产品型号：RH48
3.材　　料：ABS/电镀/线路板
4.输入电压：DC4.5V~5.5V MAX
5.使用电流：150~250mA
6.使用功率：1W
7.风扇工使用流：一档/150mA；二档/250mA
8.负离子浓度：$100*10^6$ PCS/cm^3
9.产品尺寸：46 * 65MM
10.电池容量：1000mAH
11.产品重量：70g
12.执行标准：GB4706.45-2008
13.检　验：合格品
14.产　地：中国·深圳

产品部件

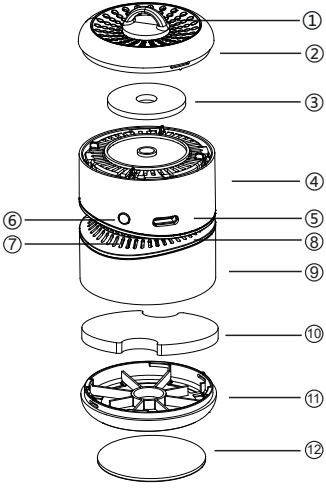

① 挂绳吊环
② 香薰盖
③ 香薰棉
④ 本体上壳
⑤ TYPE-C充电口
⑥ 控制按钮
⑦ 指示灯光区域
⑧ 出风口支架
⑨ 本体下壳
⑩ 过滤棉
⑪ 过滤棉盖
⑫ 磁吸铁片

功能操作

1. 按键功能：长按按键第一次开机，指示灯光亮起，风扇小档运行，负离子开启。
开机后，单按一下按键，风扇大档开启；再单按一下按钮，风扇停止。
风扇停止后，单按一下按键，风扇小档开启；再单按一下按键，风扇大档开启，以此循环。
开机状态下，长按按键关机，指示灯光灭，设备停止工作。

2 .TYPE-C 输入插口：可以给产品供电。

3 .香薰功能：顶部配置了香薰棉，可以在香薰棉上面滴精油、香精、香水，产生香薰的功能。可以拆卸更换香薰棉。

4 .空气过滤：底部进风口配置过滤棉，可以有效过滤空气中的一些有害物质。

注：负离子开机后就一直保持运行状态，按键只控制风扇的大小档转换和开关。

注意事项

1 . 本产品过滤棉建议三个月更换一次。(可以咨询卖家购买原装进行更换)
2 . 本产品应用场景：可以挂脖，车载（磁吸或者放置在可移胶上面）。
3 . 请不要把香精、精油，香水等液体喷在过滤棉上面。
4 . 香薰棉不宜承载过多液体，以免渗透到电路板造成短路。
5 . 本产品不宜放置在高温/潮湿处。

产品标配

净化器*1，数据线*1，挂绳*1，合格证*1
过滤棉*1，香薰棉*1

香薰棉加精油或者更换的方法

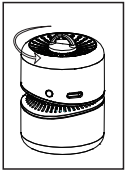

逆时针旋转顶部香薰盖拧开香薰盖

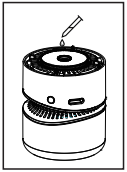

增加精油或者香水在香薰棉上面

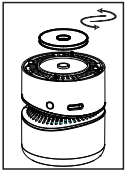

或者更换新的香薰棉

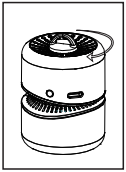

顺时针旋转香薰盖拧紧香薰盖

过滤棉更换的方法

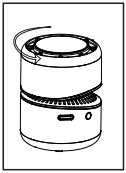

逆时针旋转底部过滤棉盖，拧开过滤棉盖

更换新的过滤棉

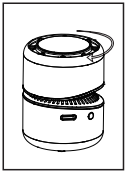

顺时针旋转过滤棉盖，拧紧过滤棉盖

Zero Point Air purifier instructions

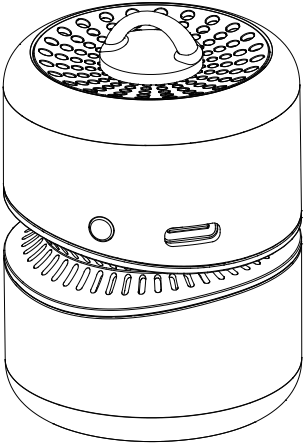

RH48

Thank you for purchasing our product
Please read the manual carefully before use the product

Product parameters

1. Product name: Zero Point air purifier
2. Product model: RH48
3. Material: ABS/Plating/PCBA
4. Input Valtage: DC4.5V~5.5V MAX
5. Working cutternt: 150~250mA
6. Use Power: 1W
7. Fan current: Low speed gear/150 mA; High speed gear/250 mA
8. Negative ion concentration: $100*10^{6}$ PCS/cm^{3}
9. Product size: 46 * 65MM
10. Battery capcity: 1000mAH
11. Product weight: 70g
12. Executive standard: GB4706.45-2008
13. Product inspection: Qualified
14. Place of origin: Shenzhen,China

Product components

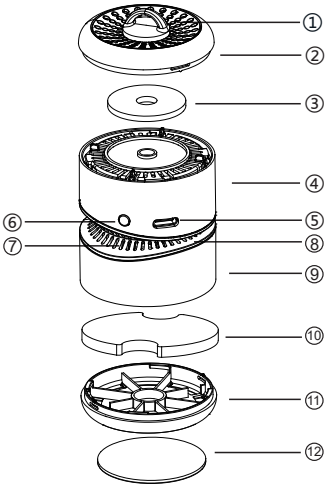

① Rope ring
② Fragrant cover
③ Fragrant cotton
④ Up case
⑤ TYPE-C input
⑥ Funtion button
⑦ LED indication
⑧ Air hole frame
⑨ Down case
⑩ Filter cotton
⑪ Filter cover
⑫ Metal plate

Instruction for use

1. Button Funtion:

   Loog press the function button for 3 seconds to turn on the device; the indication LED is on and the fan rotates at low speed gear. The Negative ion generator start to work at the same time. Short press the function button once, the fan rotates at high speed gear. Short press the function button once, the fan stop. Short press function button once again, the fan rotates at low speed gear. In this cycles.

   Loog press the function button for 3 seconds to turn off the device.

2. TYPE-C input: For device sharging

3. Fragrance: Device is equipped with fragrant cotton in the top case. Users can add the essential oil or perfume to the fragrant cotton. The gragrant cotton can be replaced.

4. Air Filtration: Device is equipped with filter cotton in the bottom air inlet. The filter cotton can effectively filter some harmful substances in the air

Note: After turn the device, the negrative ion will keep working conditon. The function button just to control the fan working or not and device on/off.

Note

1. It is recommended to replace the filter cotton every three months. (User can consult the seller to buy the original material to replace)
2. Application environment: can be hung neck, car (magnetic suction or placed on the removable glue)
3. Please don't add the essential oil or perfume to the filter cotton.
4. Please don't add too much essential oil or perfume to the frangrant cotton. So as not to penetrate into the PCBA and cause short circuit .
5. Please should not be placed at high temperature / humidity.

Product standard accessories

Air purifier*1, Charging cable*1, Neck rope *1, Certification*1
Filter cotton*1, Fragrant cotton*1, CPE bag *1

Method of add the essential oil

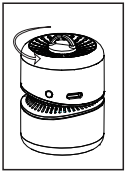

Turn the top fragrant cover counter clockwise to open it

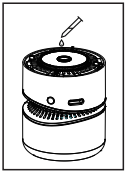

Add the essential oil or perfume to the fragrant cotton

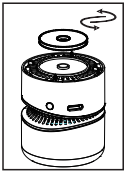

Or replace it with a new fragrant cotton

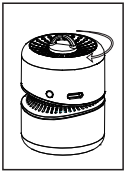

Turn the fragrant cover clockwise and tighten it

Method of changing filter cotton

Turn the buttom filter cover counter clockwise to open it

Change it with a new filter cotton

Turn the filter cover clockwise and tighten it