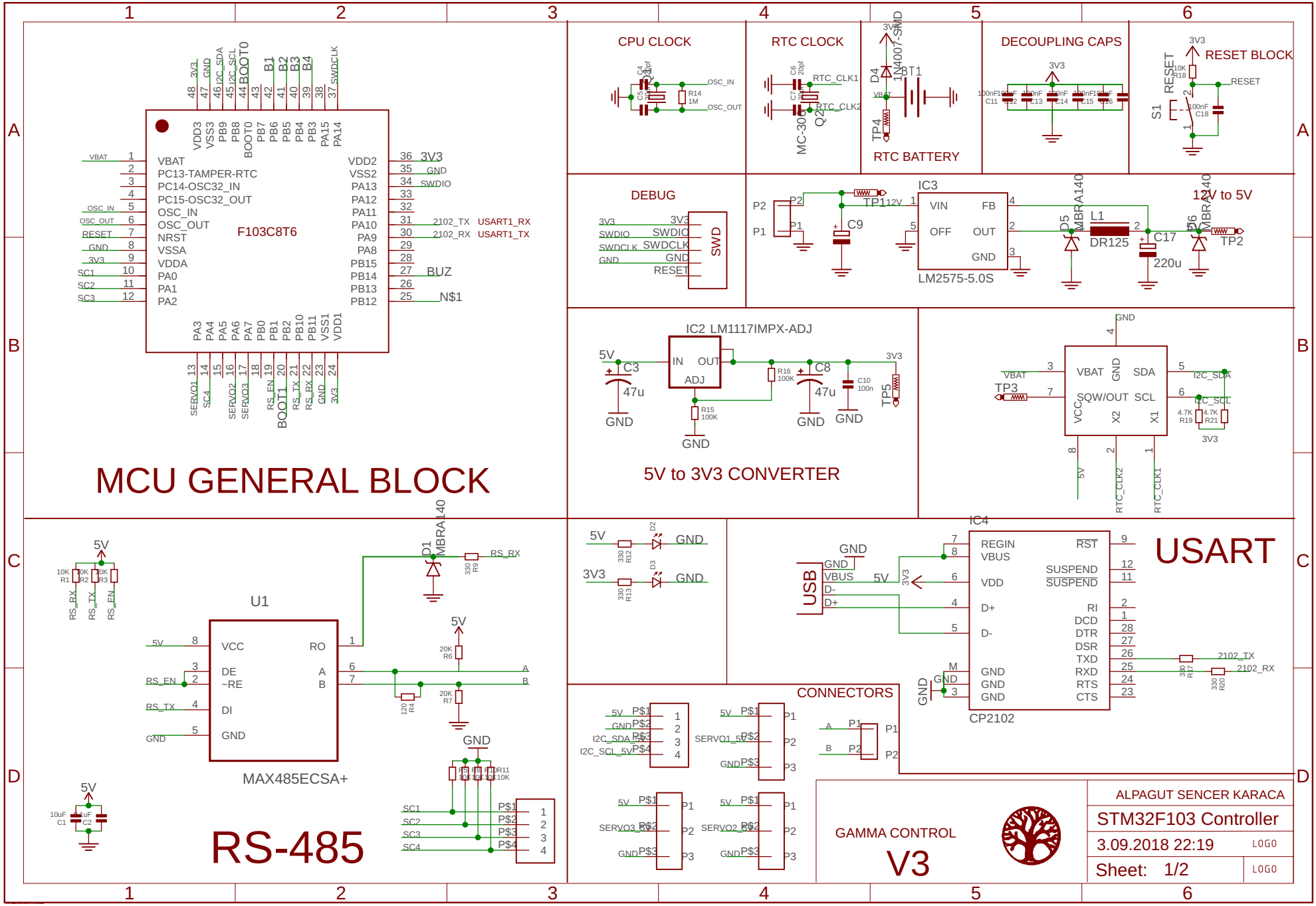
MCU GENERAL BLOCK
F103C8T6
VBAT
PC13-TAMPER-RTC
PC14-OSC32_IN
PC15-OSC32_OUT
OSC_IN
OSC_OUT
NRST
VSSA
VDDA
PA0
PA1
PA2
VDD2
VSS2
PA13
PA12
PA11
PA10
PA9
PA8
PB15
PB14
PB13
PB12
2102_TX USART1_RX
2102_RX USART1_TX
BUZ
N$1
CPU CLOCK
RTC CLOCK
RTC_CLK1
RTC_CLK2
RTC BATTERY
DECOUPLING CAPS
RESET BLOCK
DEBUG
SWD
SWDIO
SWDCLK
IC3
LM2575-5.0S
12V to 5V
IC2 LM1117IMPX-ADJ
5V to 3V3 CONVERTER
USART
IC4
CP2102
USB
U1
MAX485ECSA+
RS-485
CONNECTORS
GAMMA CONTROL
V3
ALPAGUT SENCER KARACA
STM32F103 Controller
3.09.2018 22:19
Sheet: 1/2
LOGO

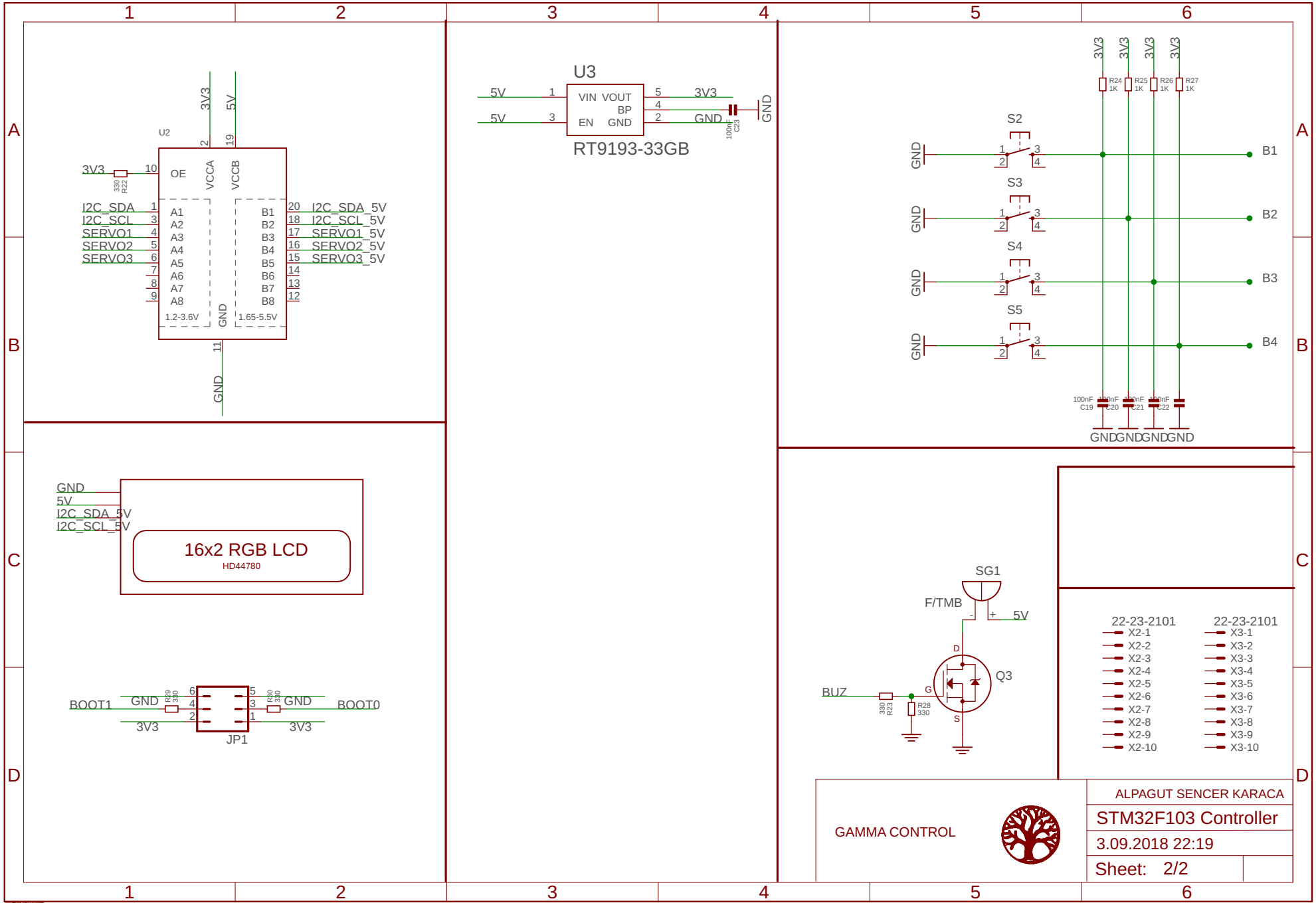
U2
3V3
5V
OE
VCCA
VCCB
3V3
R22 330
I2C_SDA
I2C_SCL
SERVO1
SERVO2
SERVO3
A1
A2
A3
A4
A5
A6
A7
A8
B1
B2
B3
B4
B5
B6
B7
B8
I2C_SDA_5V
I2C_SCL_5V
SERVO1_5V
SERVO2_5V
SERVO3_5V
1.2-3.6V
GND
1.65-5.5V
GND
U3
5V
5V
VIN
VOUT
BP
EN
GND
3V3
GND
C23 100nF
GND
RT9193-33GB
3V3
R24 1K
R25 1K
R26 1K
R27 1K
S2
S3
S4
S5
GND
B1
B2
B3
B4
C19 100nF
C20 100nF
C21 100nF
C22 100nF
GND
GND
GND
GND
GND
5V
I2C_SDA_5V
I2C_SCL_5V
16x2 RGB LCD
HD44780
BOOT1
GND
R29 330
3V3
JP1
R30 330
GND
BOOT0
3V3
SG1
F/TMB
5V
D
Q3
G
S
BUZ
R23 330
R28 330
22-23-2101
X2-1
X2-2
X2-3
X2-4
X2-5
X2-6
X2-7
X2-8
X2-9
X2-10
22-23-2101
X3-1
X3-2
X3-3
X3-4
X3-5
X3-6
X3-7
X3-8
X3-9
X3-10
GAMMA CONTROL
ALPAGUT SENCER KARACA
STM32F103 Controller
3.09.2018 22:19
Sheet: 2/2