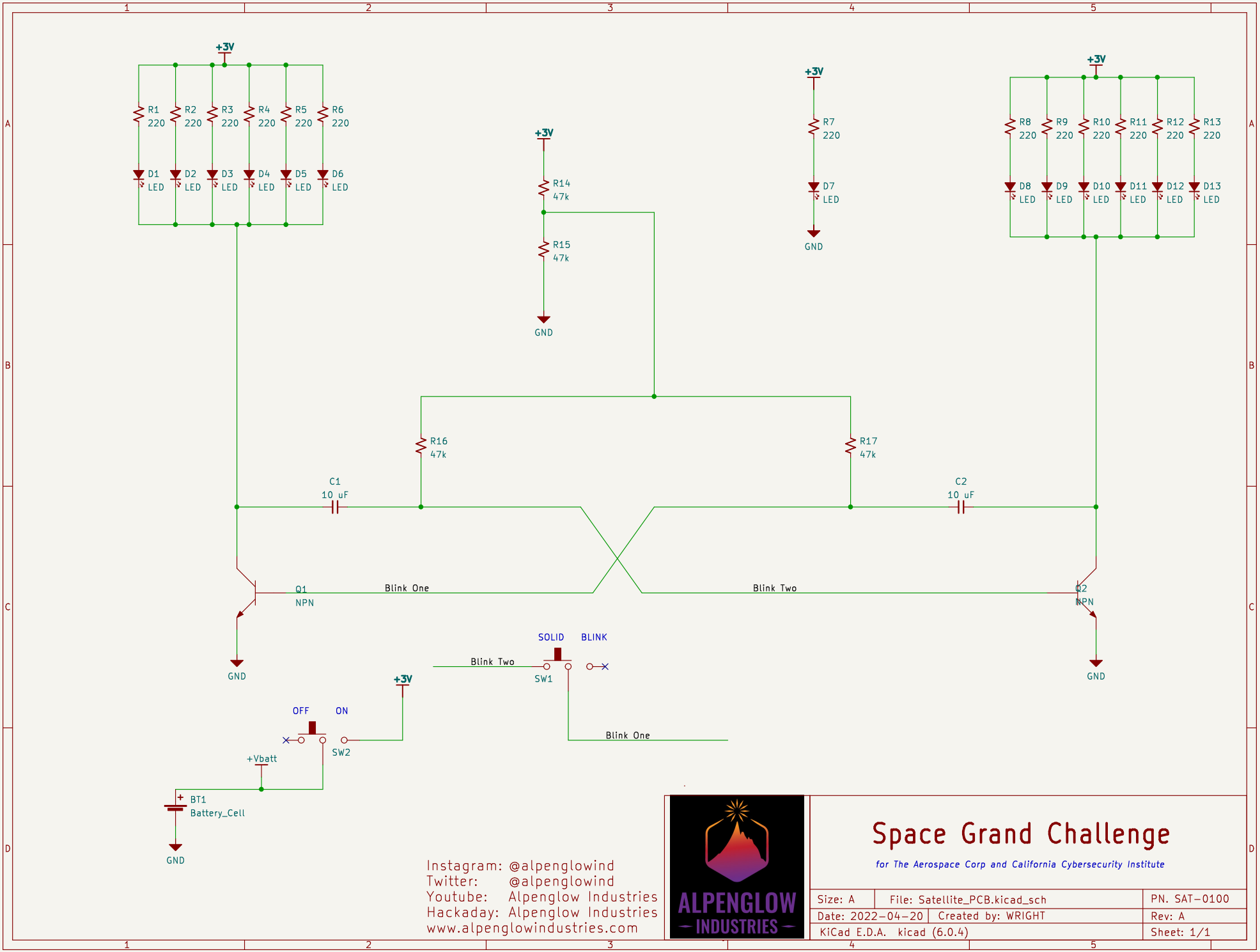
+3V
R1 220
R2 220
R3 220
R4 220
R5 220
R6 220
D1 LED
D2 LED
D3 LED
D4 LED
D5 LED
D6 LED
R14 47k
R15 47k
GND
R7 220
D7 LED
R8 220
R9 220
R10 220
R11 220
R12 220
R13 220
D8 LED
D9 LED
D10 LED
D11 LED
D12 LED
D13 LED
R16 47k
R17 47k
C1 10 uF
C2 10 uF
Q1 NPN
Q2 NPN
Blink One
Blink Two
SOLID
BLINK
SW1
OFF
ON
SW2
+Vbatt
BT1 Battery_Cell
Instagram: @alpenglowind
Twitter: @alpenglowind
Youtube: Alpenglow Industries
Hackaday: Alpenglow Industries
www.alpenglowindustries.com
ALPENGLOW INDUSTRIES
Space Grand Challenge
for The Aerospace Corp and California Cybersecurity Institute
Size: A
File: Satellite_PCB.kicad_sch
PN. SAT-0100
Date: 2022-04-20
Created by: WRIGHT
Rev: A
KiCad E.D.A. kicad (6.0.4)
Sheet: 1/1