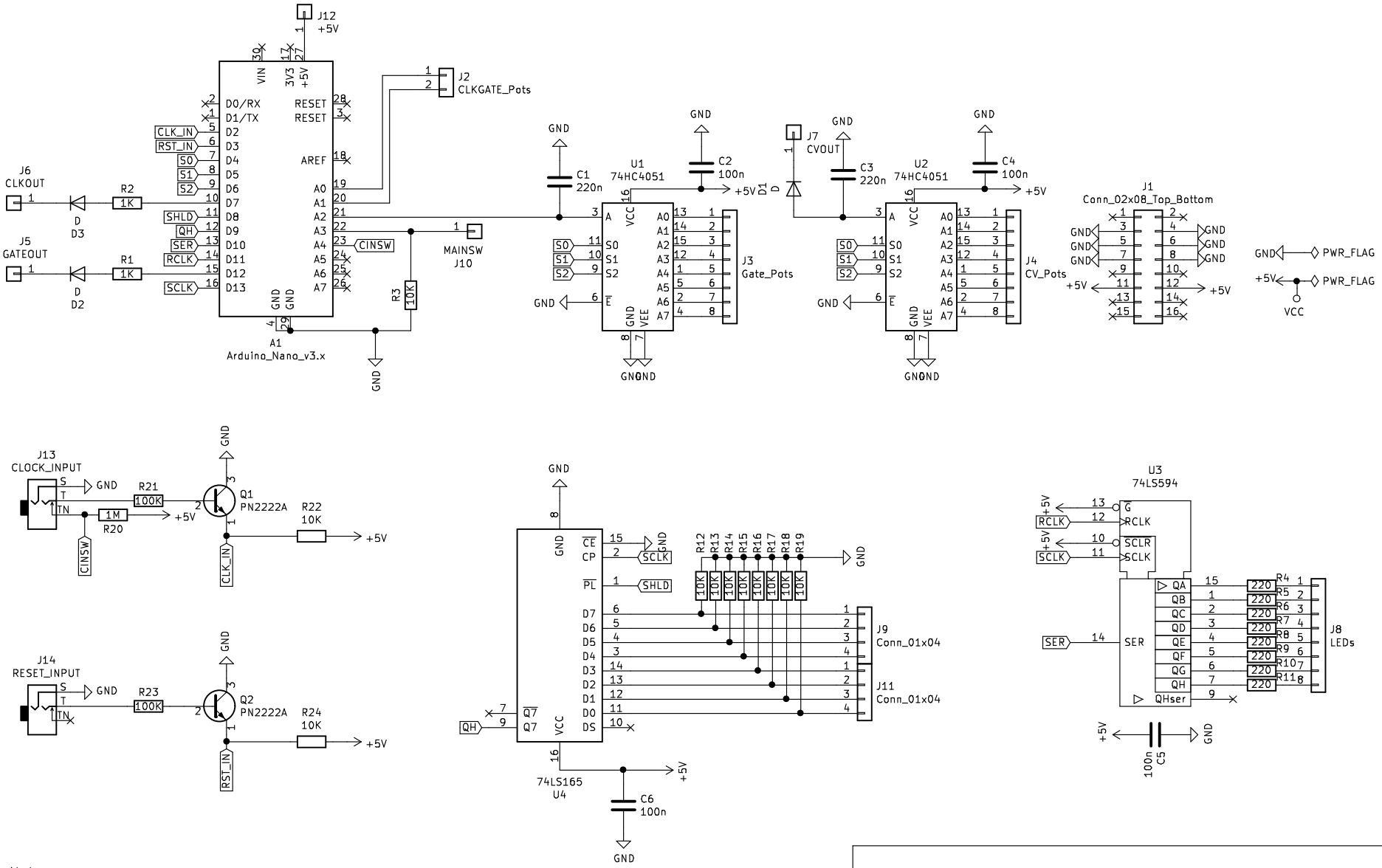

Wiring Notes:

* Connect pots to +5V and GND.
* Pot tapers to the CV + Gate connectors.
* Pots are 10k.
* Connect jacks to GND and connectors.
* Connect switches to +5V and connectors.
* LED cathodes to GND and LED connector.
* Play with 74LS594 resistors to match your LEDs.

https://github.com/tomarus/diymetro

Tommy van Leeuwen

Sheet: /

File: diymetro.sch

Title: DIY Metropolis 185

Size: A4	Date: 2019-02-10	**Rev: 1.1**
KiCad E.D.A. kicad 5.0.2+dfsg1-1bpo9+1		Id: 1/1