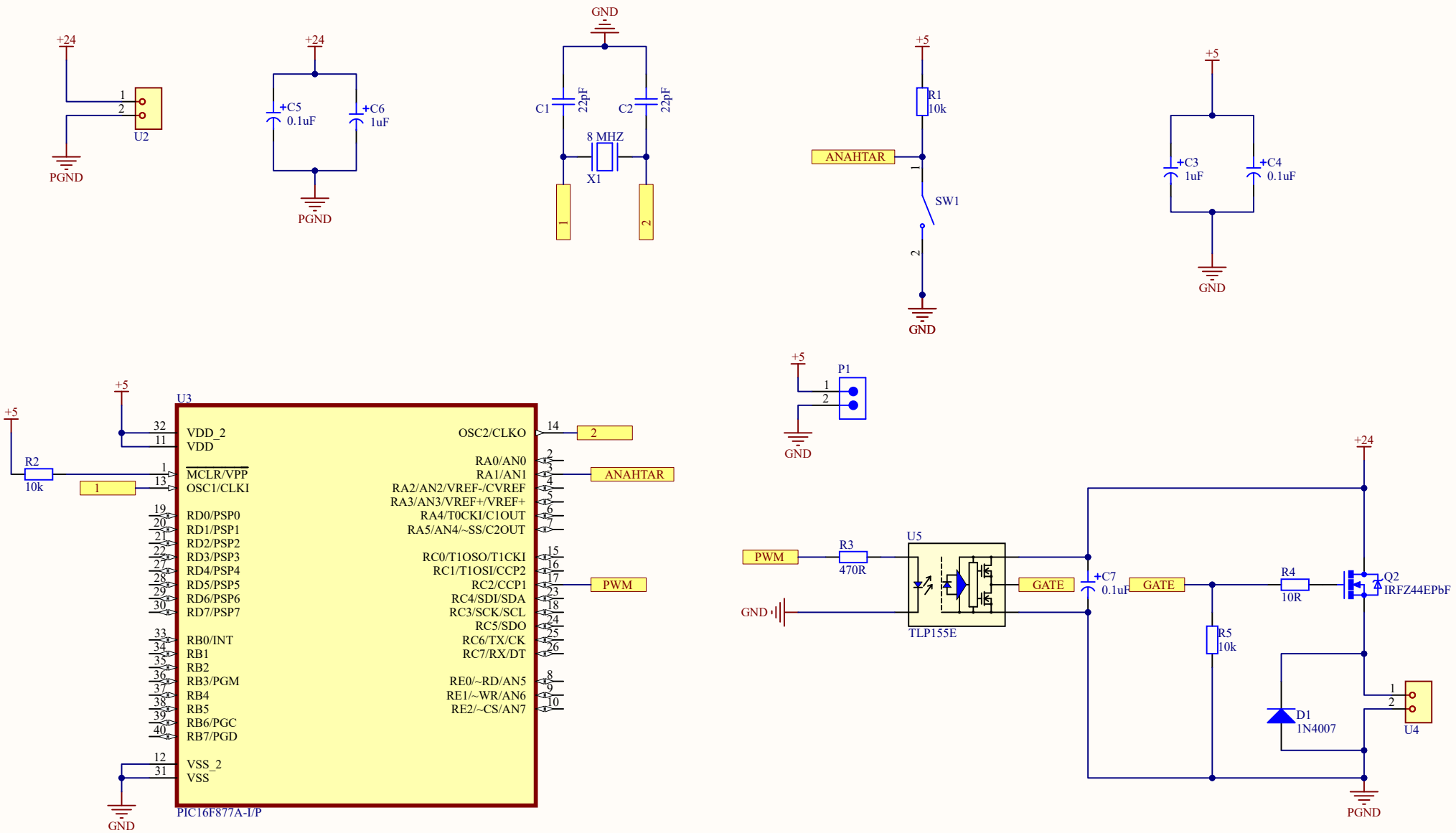

Title	ALTAY BORA	
Size A4	Number	Revision
Date: 9.29.2025		Sheet of
File: D:\Altay Bora\..\Sheet1.SchDoc		Drawn By:

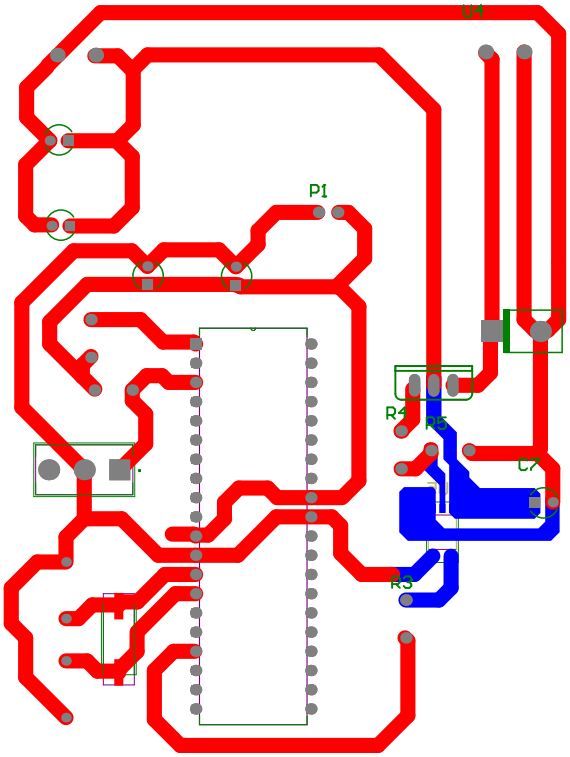
U4
P1
R4
R3

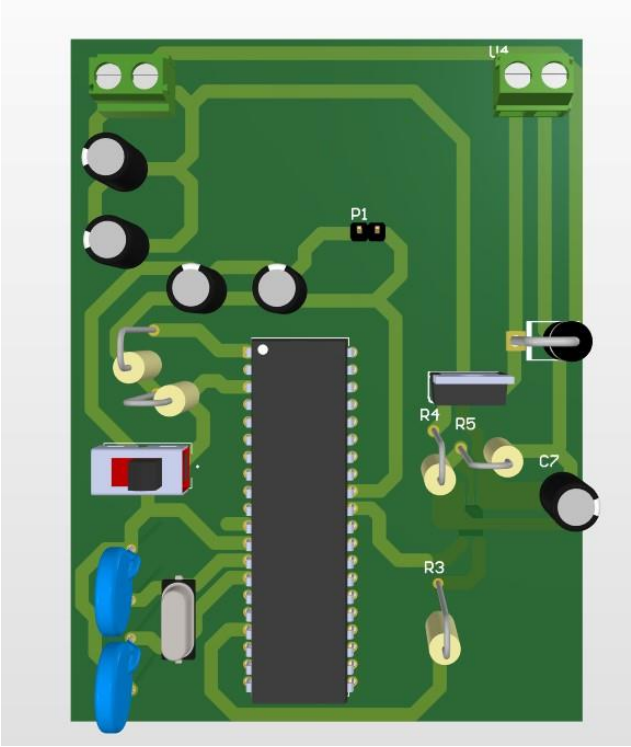
U4
P1
R4
R5
C7
R3

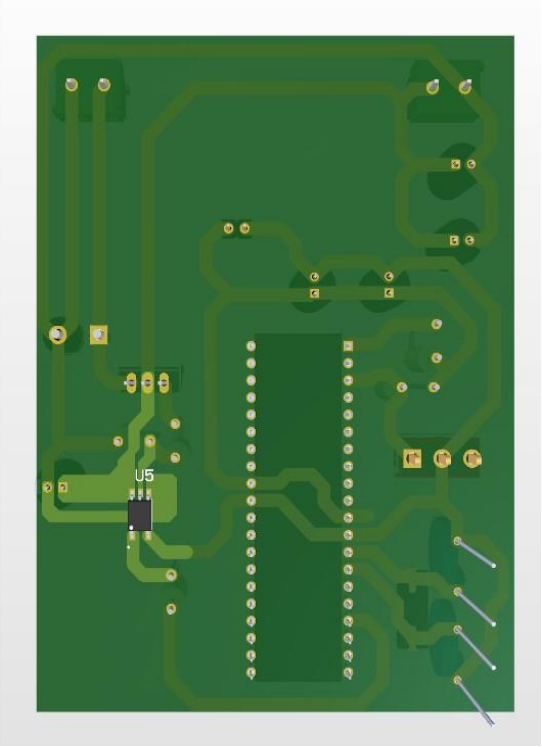
U5

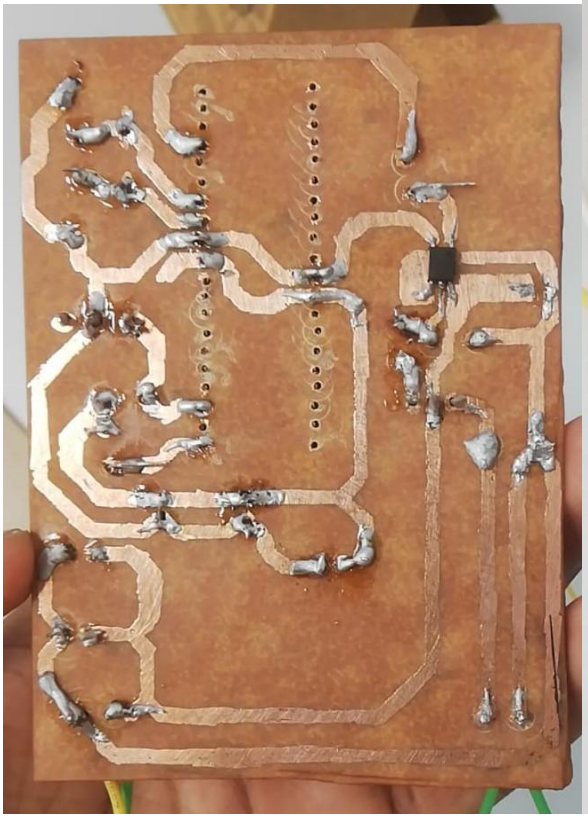

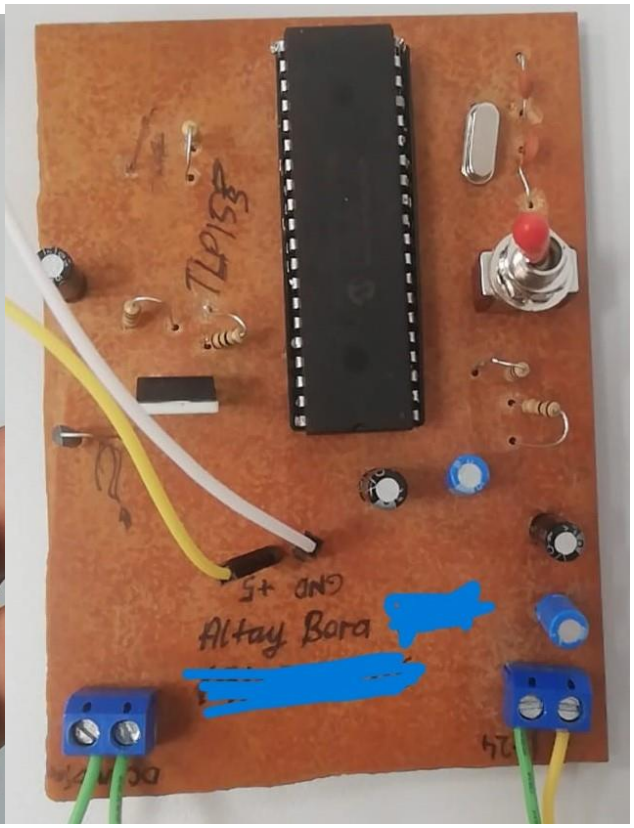
TLP153
5+ GND
Altay Bora