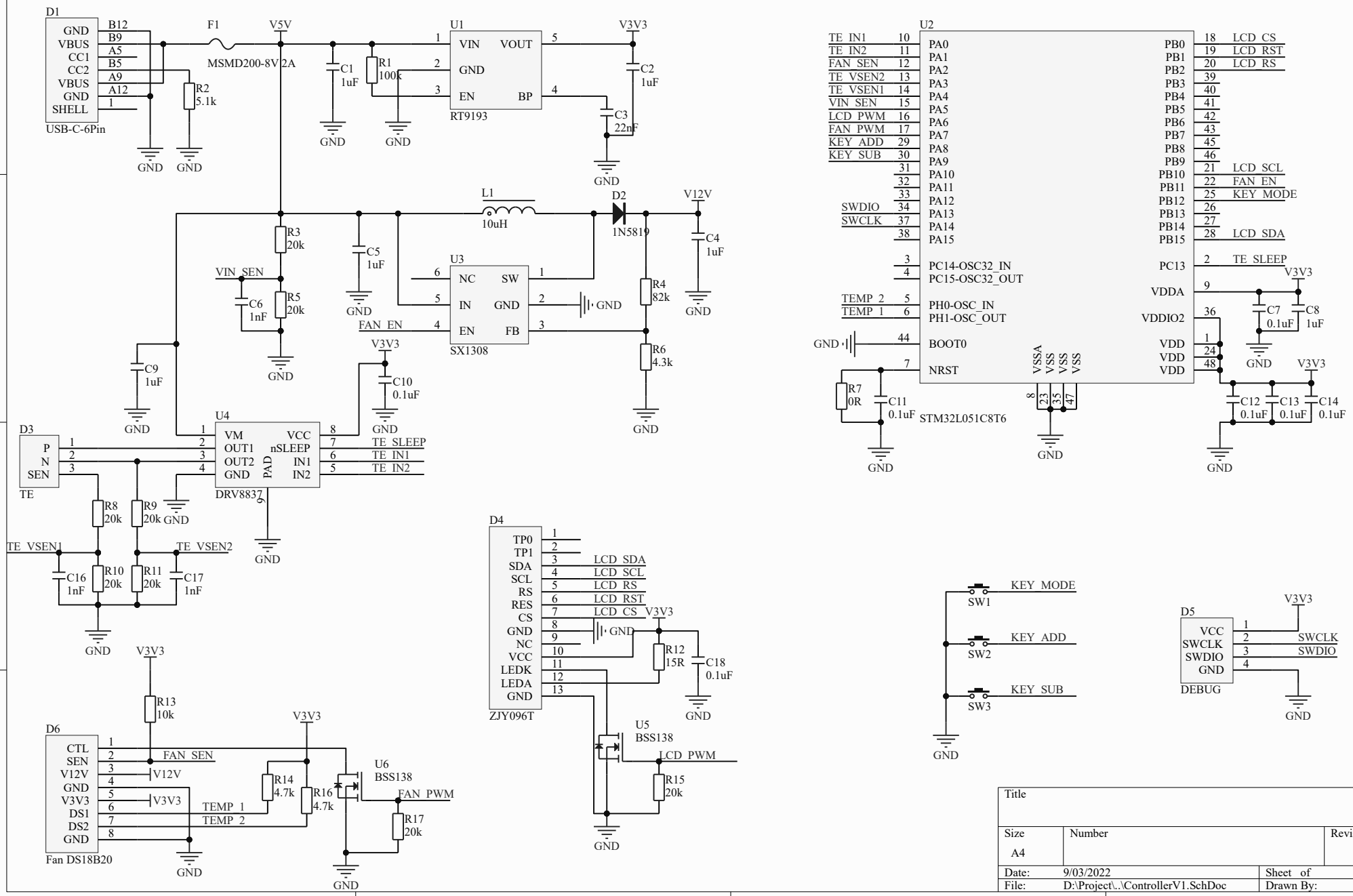

Title		
Size A4	Number	Revision
Date: 9/03/2022		Sheet of
File: D:\Project\..\ControllerV1.SchDoc		Drawn By: