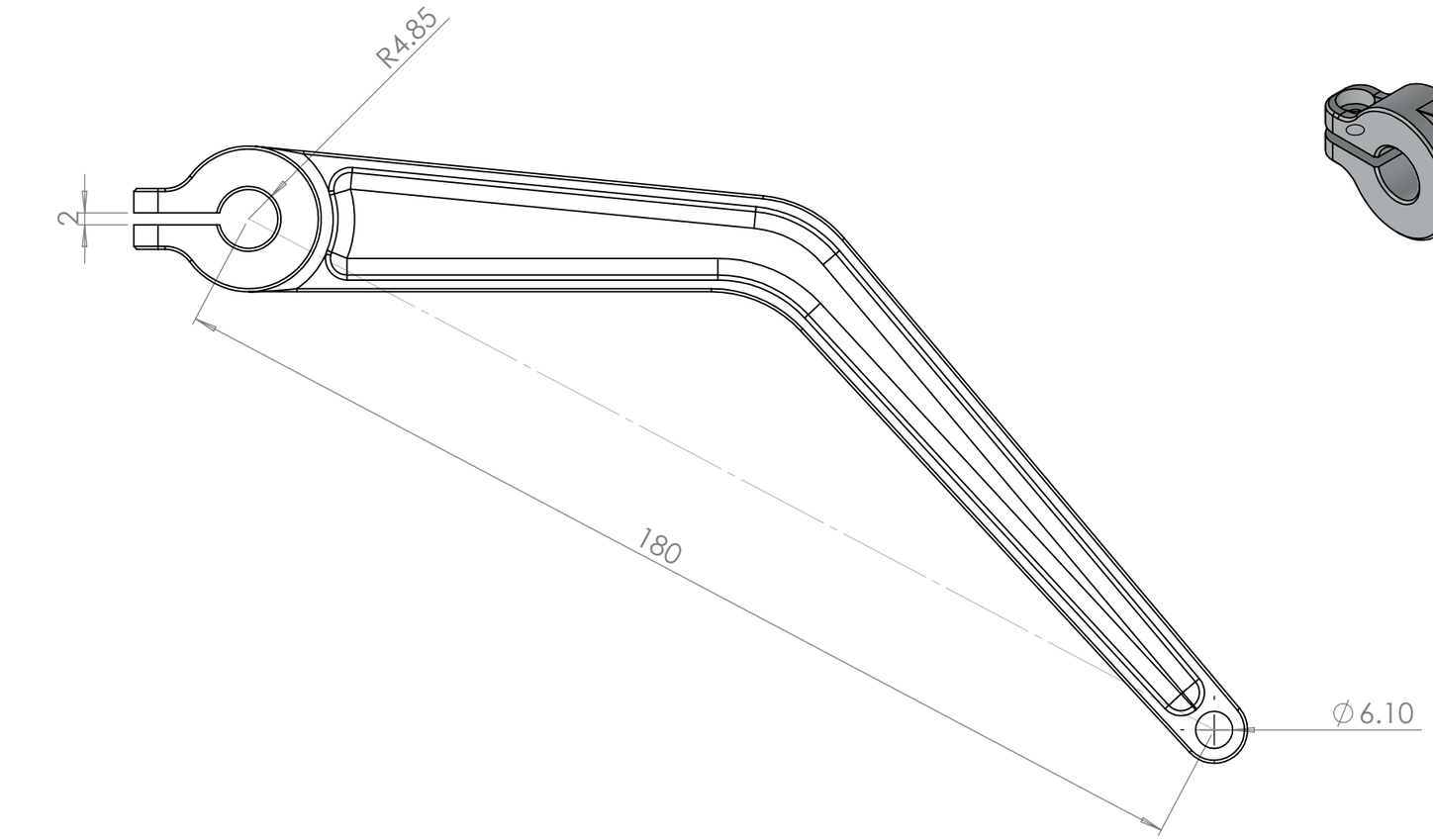

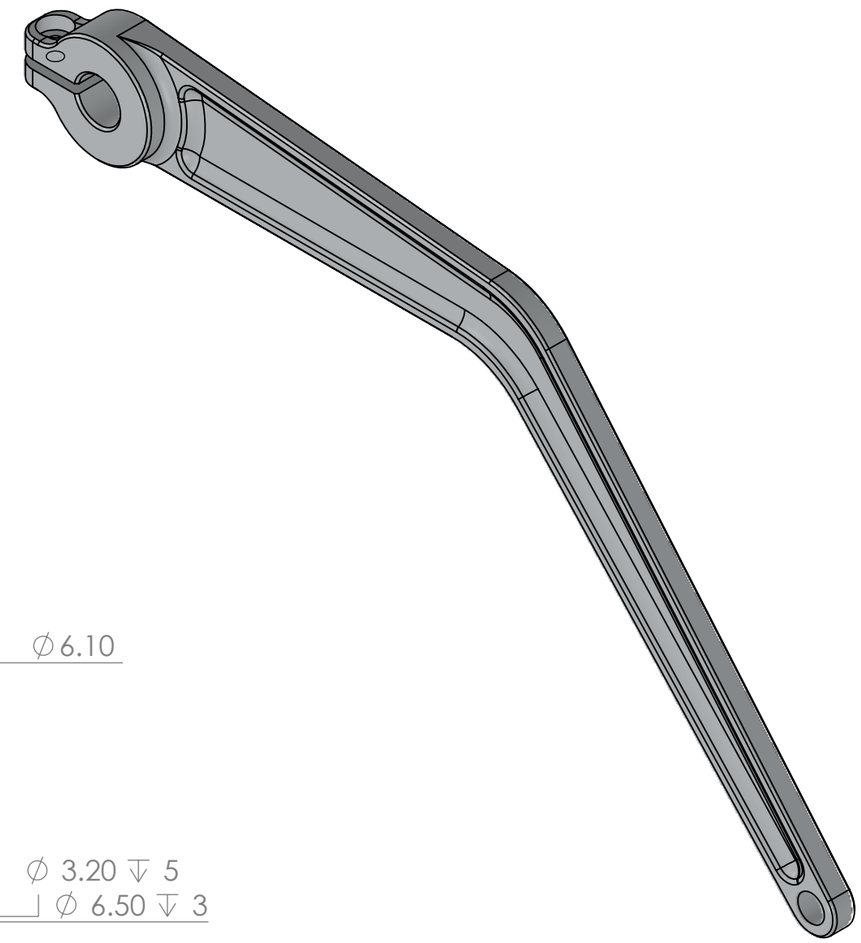

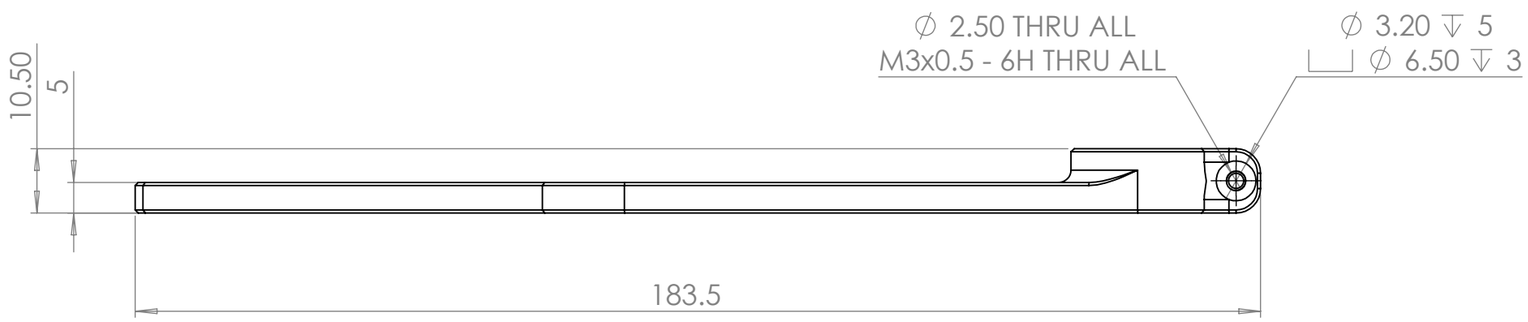

UNLESS OTHERWISE SPECIFIED: DIMENSIONS ARE IN MILLIMETERS SURFACE FINISH: TOLERANCES: LINEAR: ANGULAR:	FINISH: Sand/bead blasted natural or Matte Black anodized				DEBURR AND BREAK SHARP EDGES	DO NOT SCALE DRAWING / REVISION
	NAME	SIGNATURE	DATE			TITLE: Linkage Arm Bicep Light
DRAWN	Scott Rapson		10/5/18			
CHK'D						
APPV'D						
MFG						
Q.A				MATERIAL: Aluminium		DWG NO. ZB-M-BICEP / A3
				WEIGHT:		SCALE:1:2 / SHEET 1 OF 1