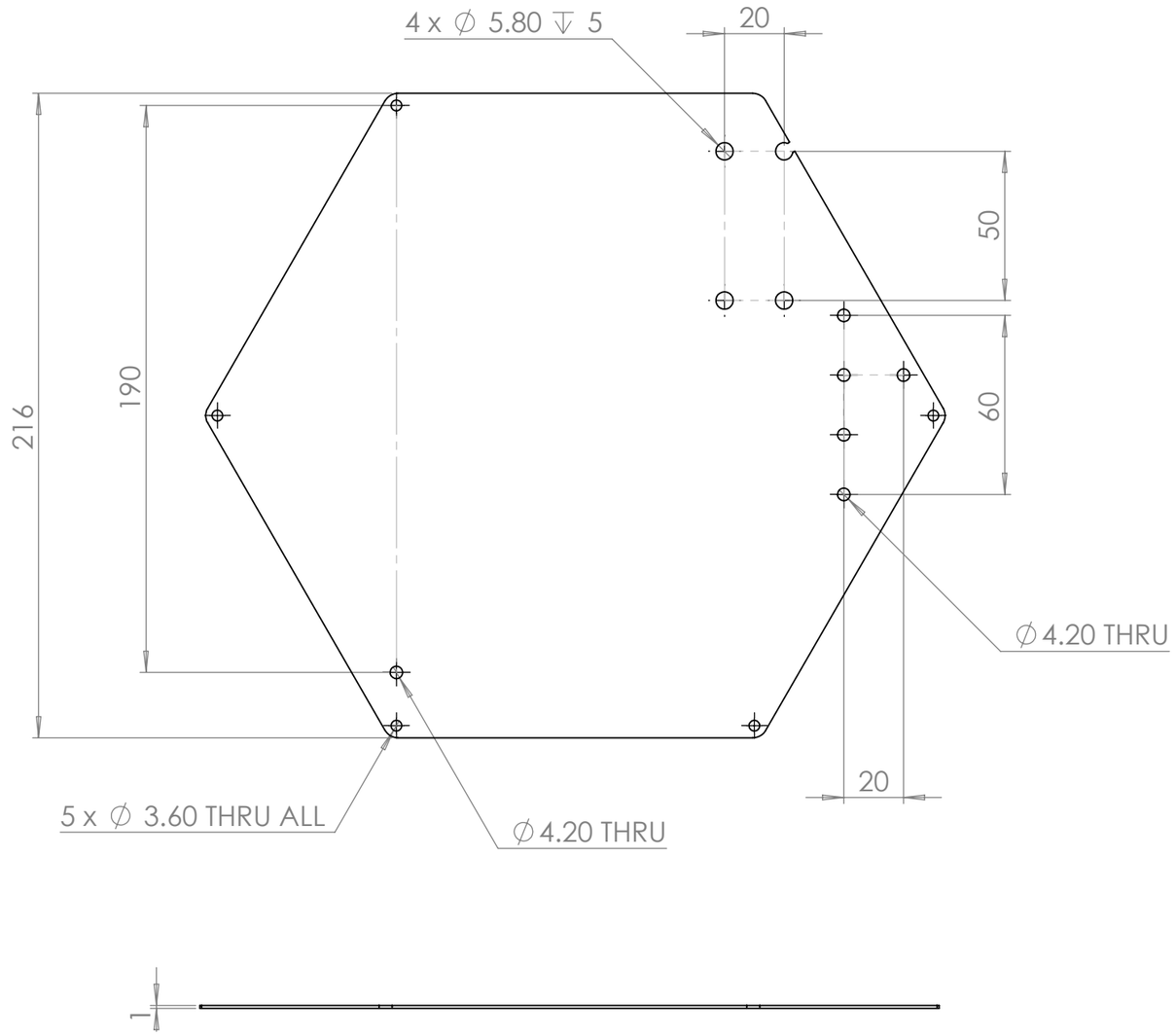

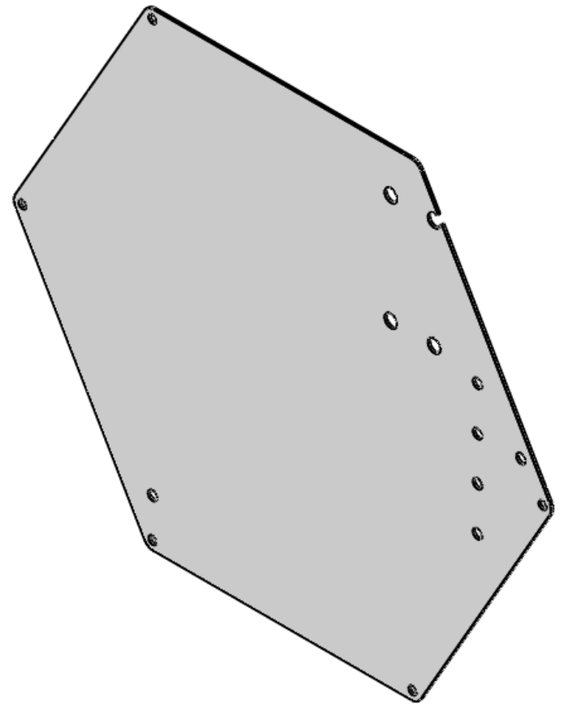

UNLESS OTHERWISE SPECIFIED: DIMENSIONS ARE IN MILLIMETERS SURFACE FINISH: TOLERANCES: LINEAR: ANGULAR:	FINISH: Natural			DEBURR AND BREAK SHARP EDGES	DO NOT SCALE DRAWING	REVISION
	NAME	SIGNATURE	DATE		TITLE:	
DRAWN	S. Rapson		30/4/18		Bottom plate cover	
CHK'D						
APPV'D						
MFG						
Q.A				MATERIAL: 1mm carbon fibre	DWG NO. ZB-BPL-A	A3
				WEIGHT:	SCALE:1:5	SHEET 1 OF 1