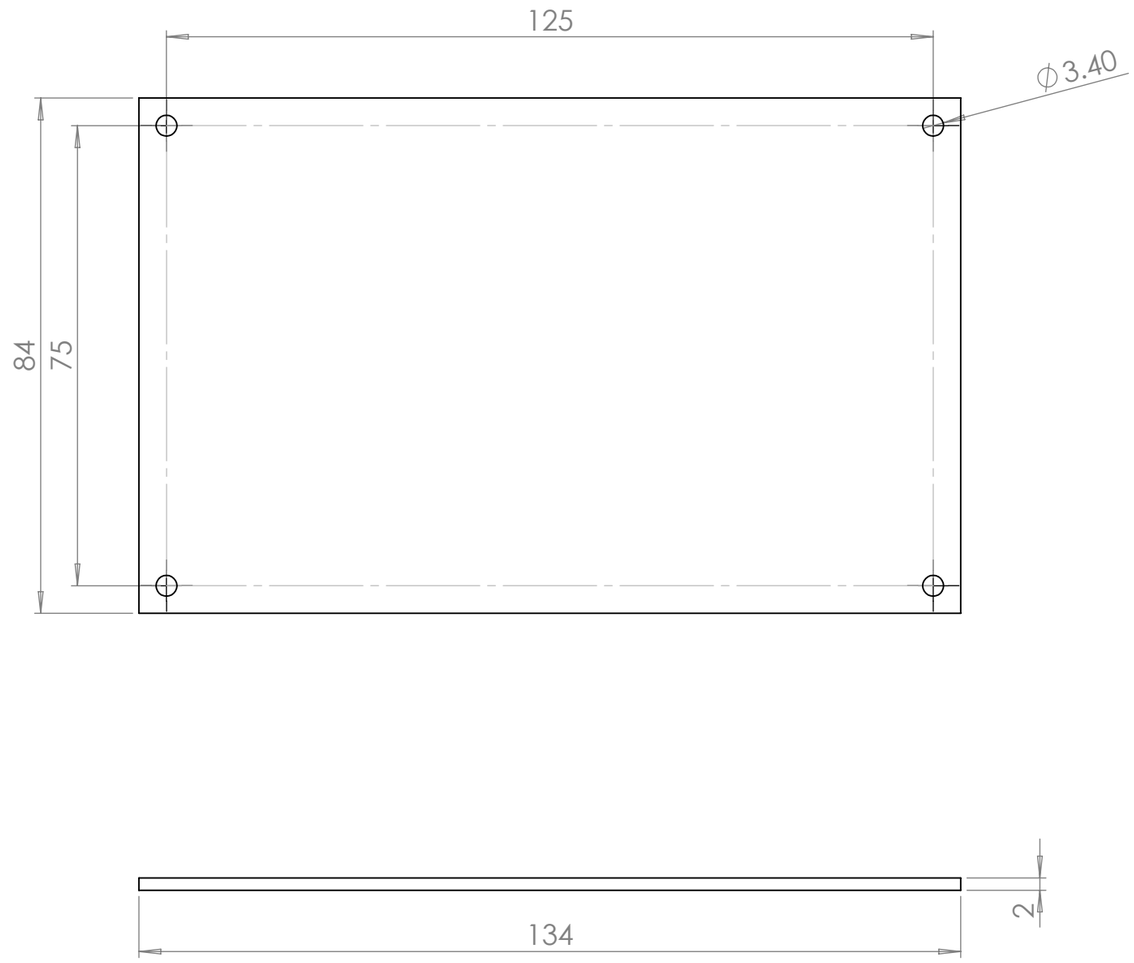

UNLESS OTHERWISE SPECIFIED: DIMENSIONS ARE IN MILLIMETERS SURFACE FINISH: TOLERANCES: LINEAR: ANGULAR:	FINISH:			DEBURR AND BREAK SHARP EDGES	DO NOT SCALE DRAWING	REVISION
	NAME	SIGNATURE	DATE		TITLE: Blank Enclosure Panel	
DRAWN	Scott Rapson		9/4/18			
CHK'D						
APPV'D						
MFG						
Q.A				MATERIAL: 2.0mm carbon plate	DWG NO. ZB-C-BLANK	A3
				WEIGHT:	SCALE:1:1	SHEET 1 OF 1