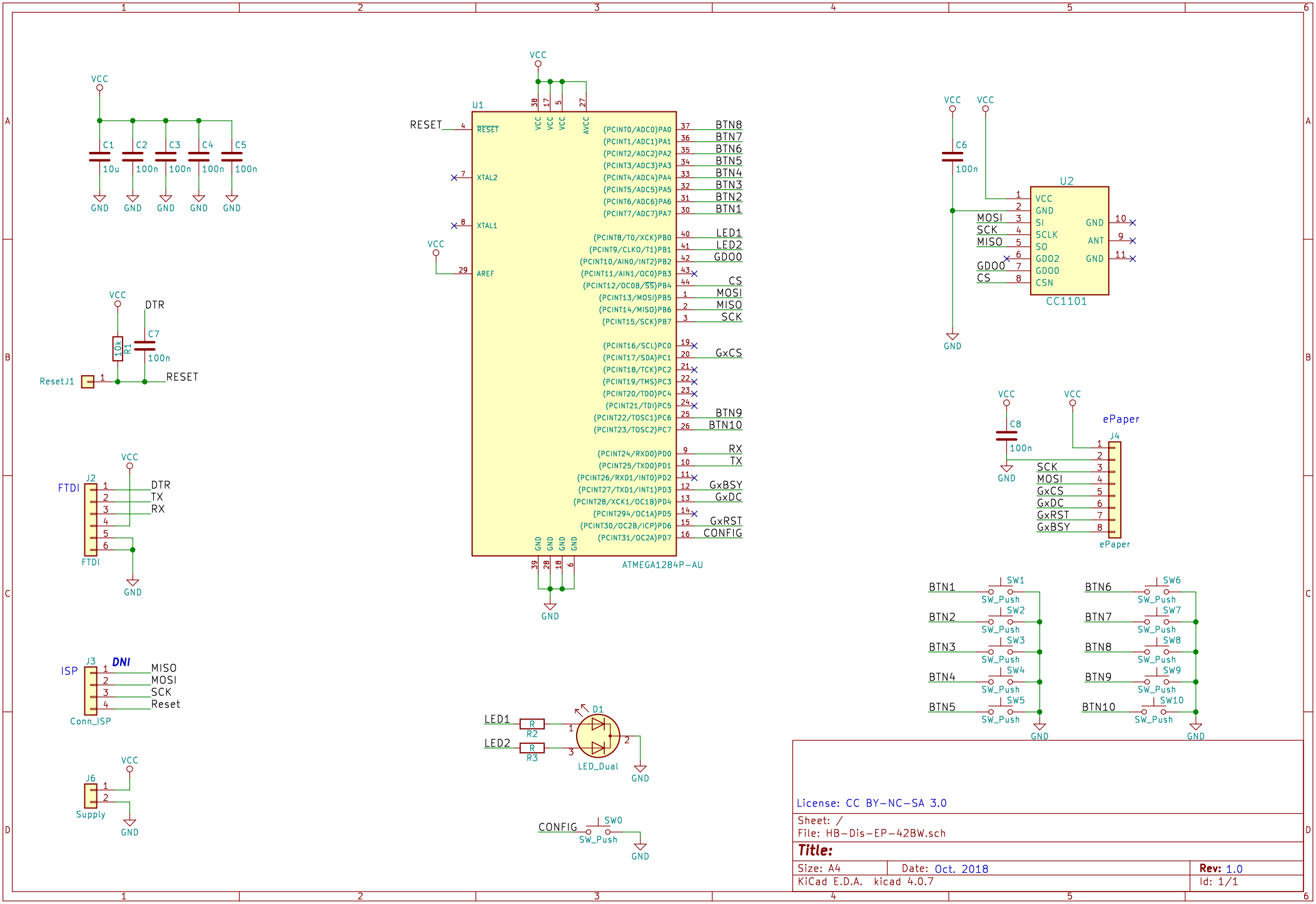

License: CC BY-NC-SA 3.0

Sheet: /
File: HB-Dis-EP-42BW.sch

Title:

Size: A4	Date: Oct. 2018	Rev: 1.0
KiCad E.D.A. kicad 4.0.7		Id: 1/1