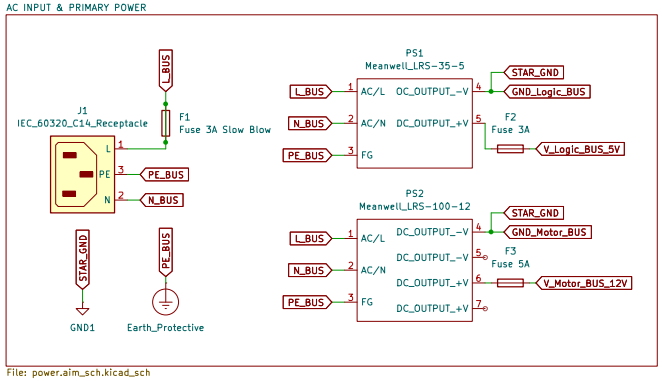

File: power.aim_sch.kicad_sch

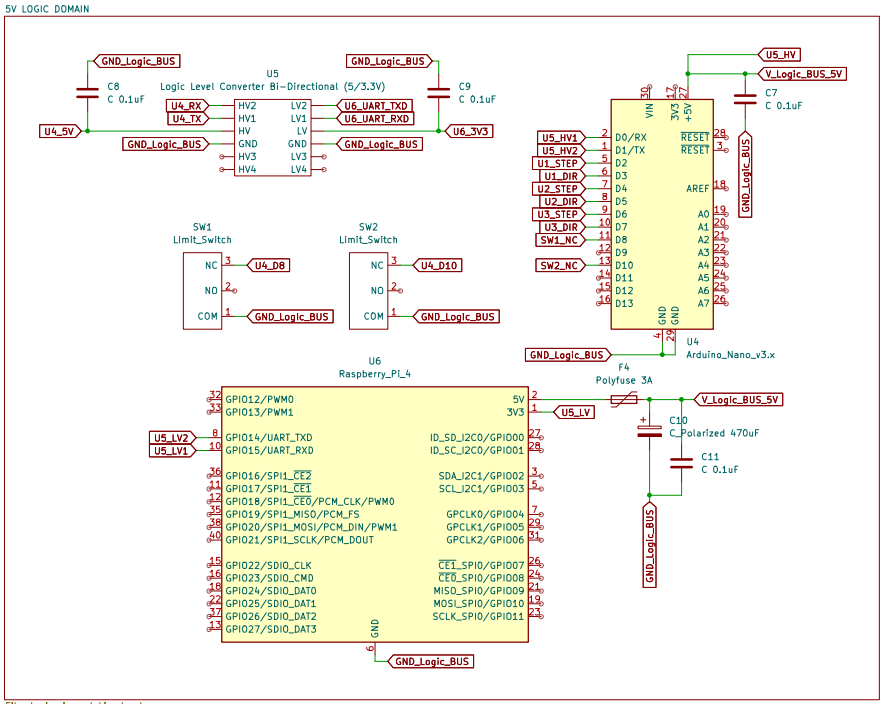

File: logic.aim_sch.kicad_sch

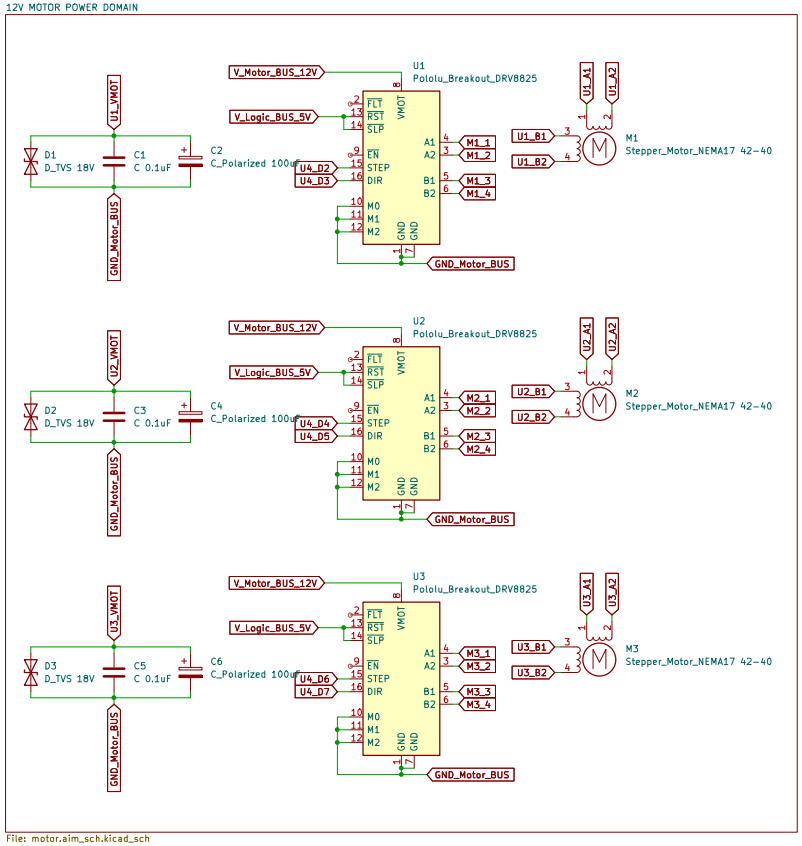

File: motor.aim_sch.kicad_sch

Alvin Octa Hidayathullah		
Sheet: /		
File: AIM Project.kicad_sch		
Title: Automation Incubator Microscope		
Size: A3	Date:	Rev:
KiCad E.D.A. 9.0.5		Id: 1/4

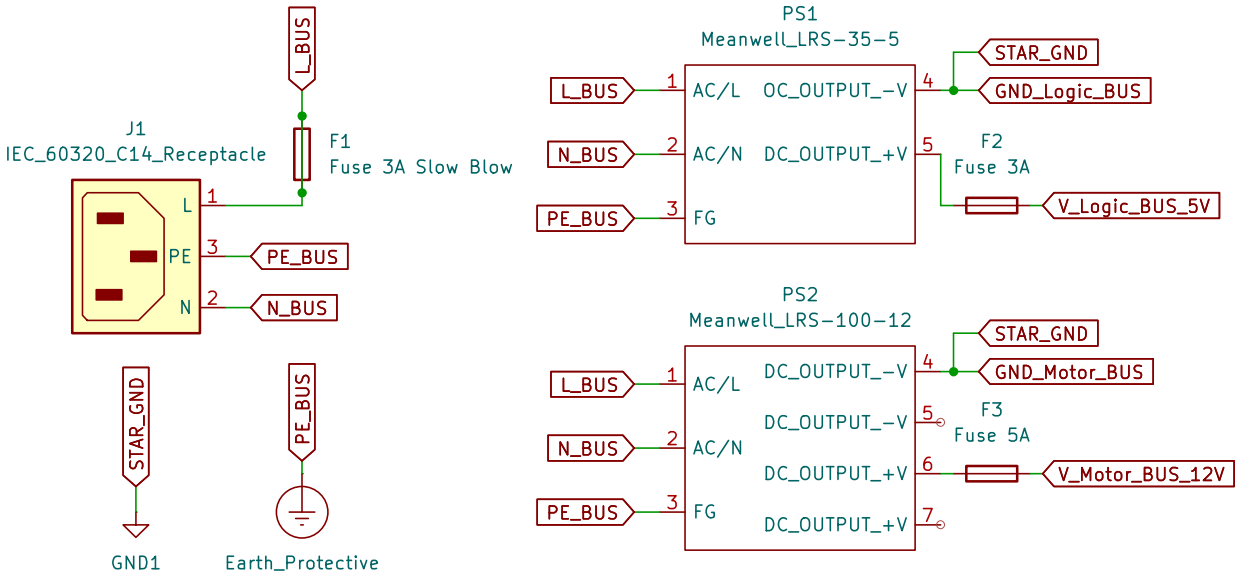

Sheet: /AC INPUT & PRIMARY POWER/
File: power.aim_sch.kicad_sch

Title:

Size: A5	Date:	**Rev:**
KiCad E.D.A. 9.0.5		Id: 2/4

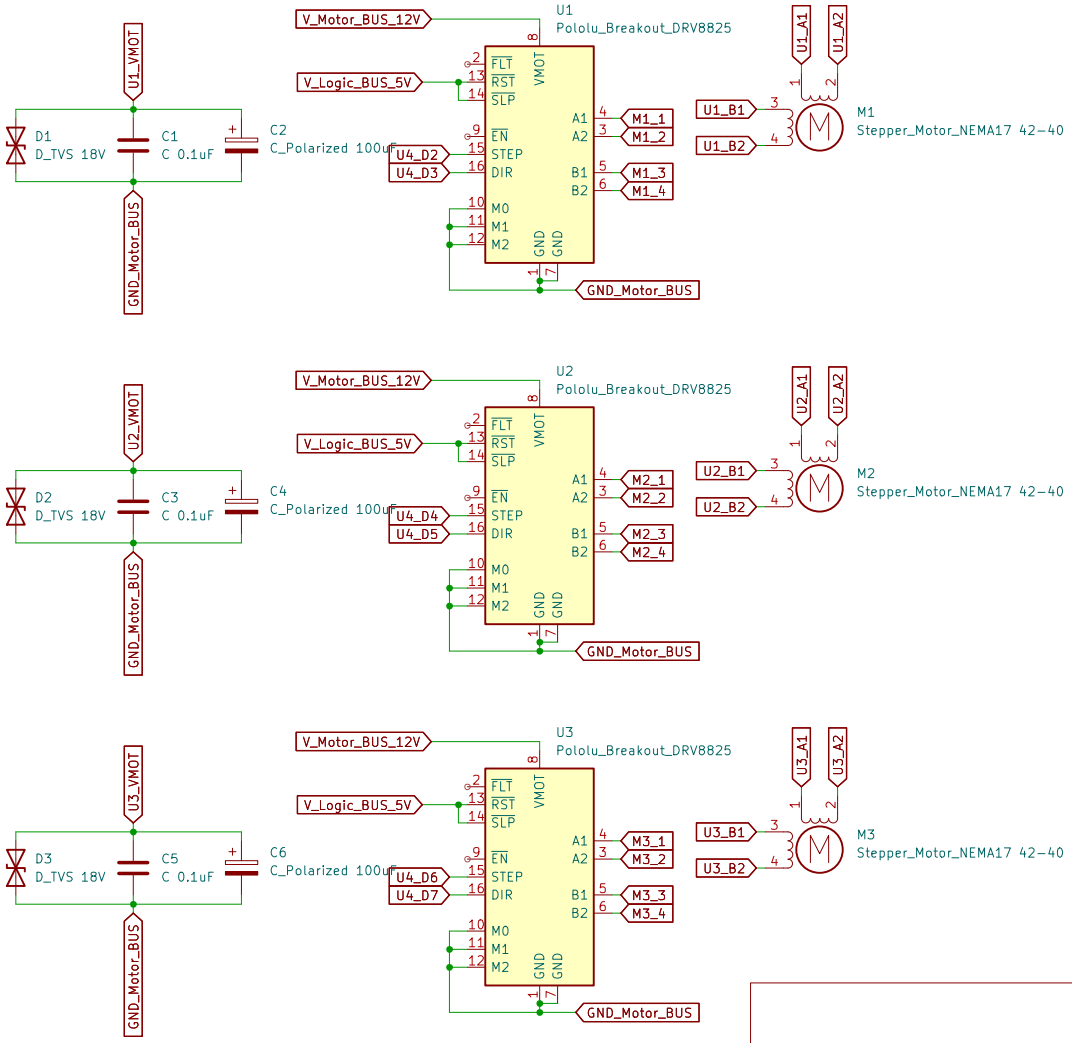

Sheet: /12V MOTOR POWER DOMAIN/
File: motor.aim_sch.kicad_sch

Title:

Size: A4	Date:	**Rev:**
KiCad E.D.A. 9.0.5		Id: 3/4

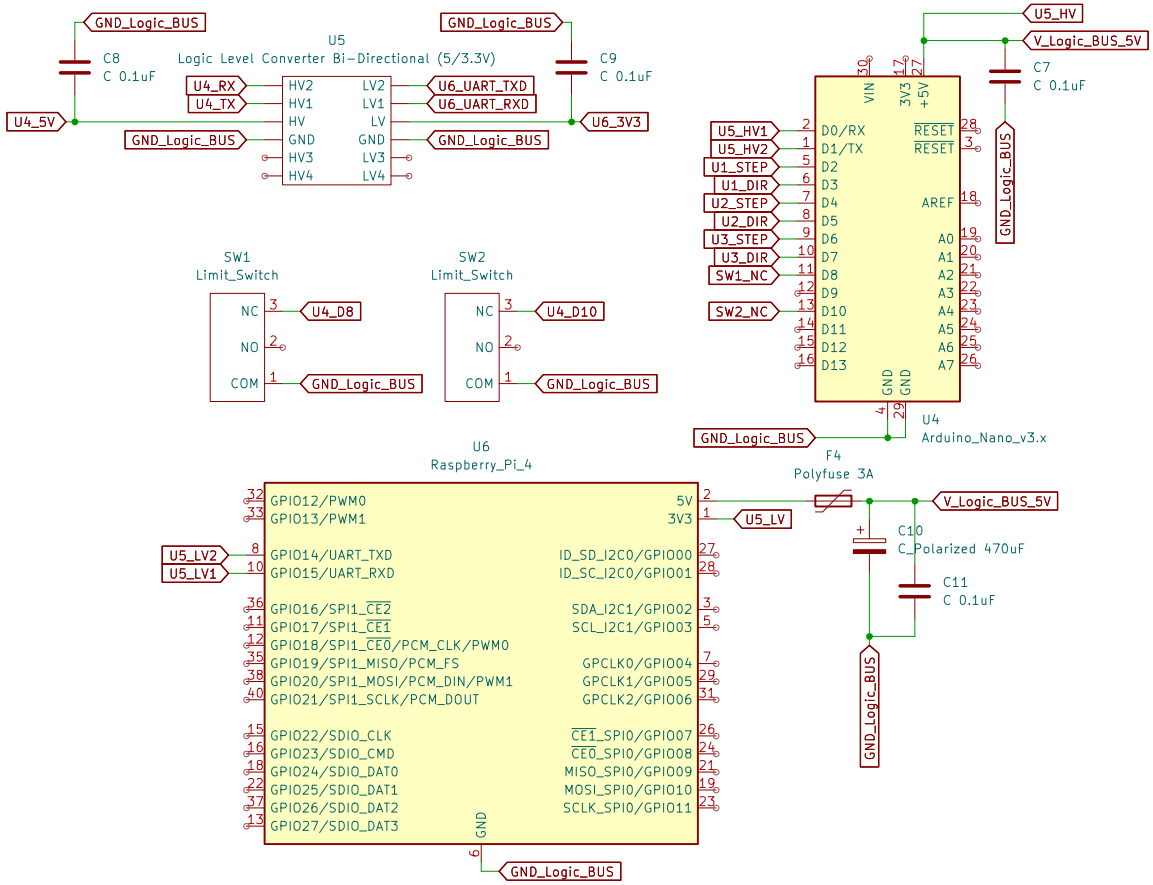

Sheet: /5V LOGIC DOMAIN/
File: logic.aim_sch.kicad_sch

Title:

Size: A4	Date:	**Rev:**
KiCad E.D.A. 9.0.5		Id: 4/4