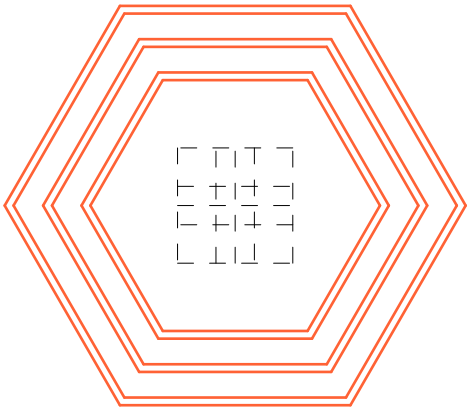

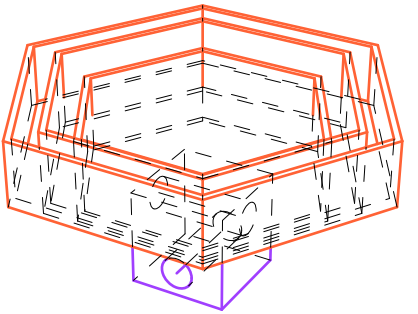

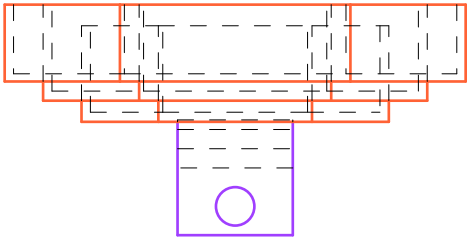

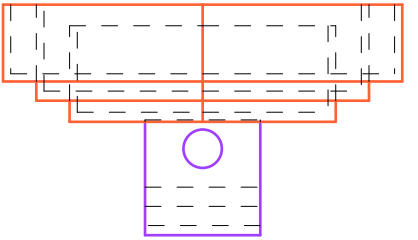

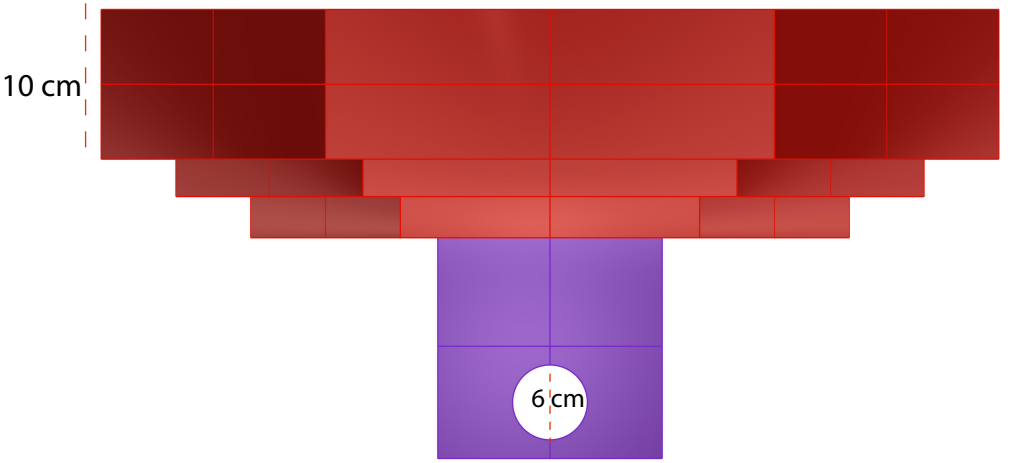
10 cm
6 cm

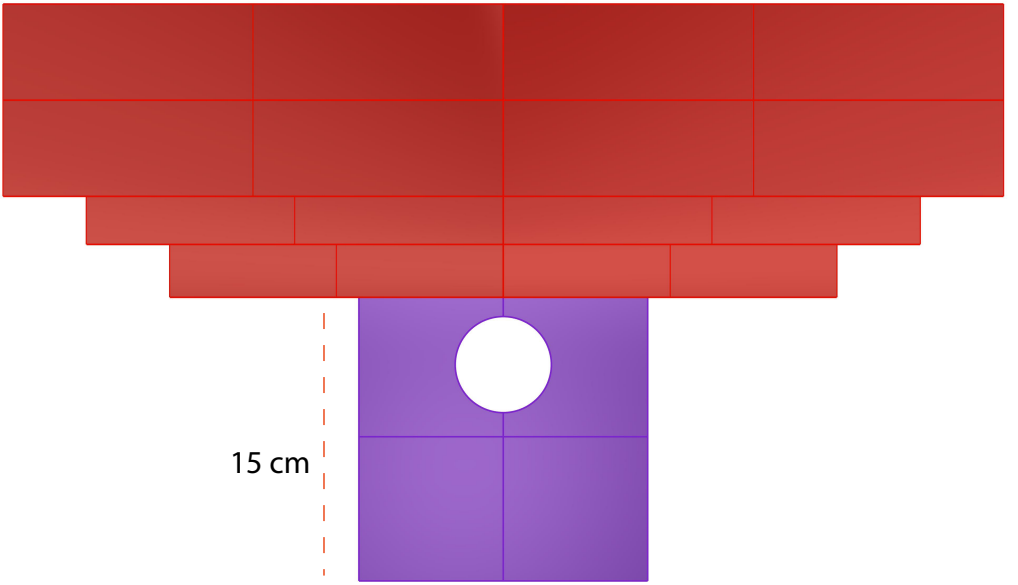
15 cm

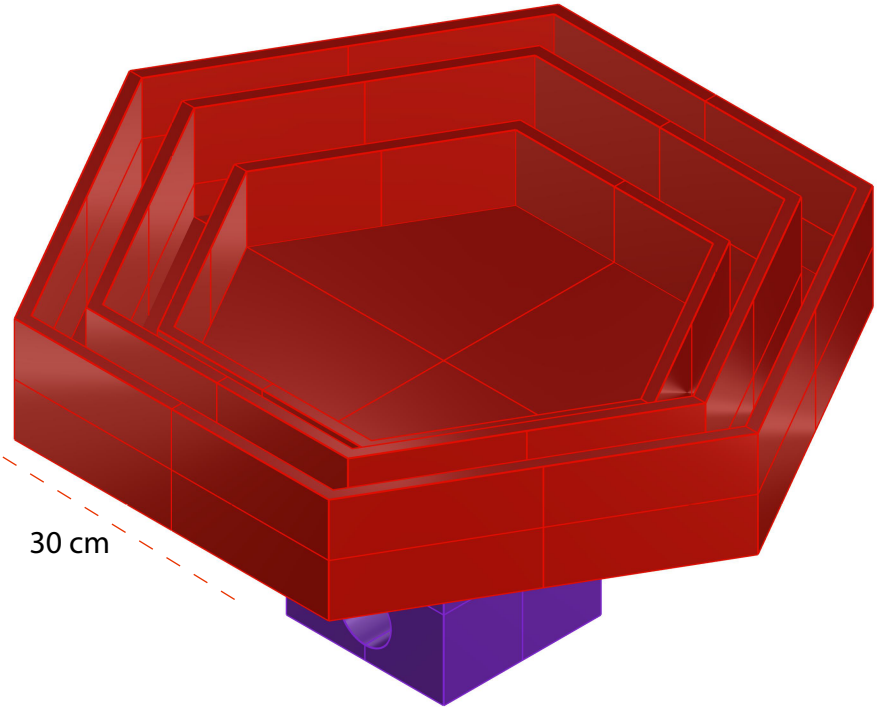
30 cm

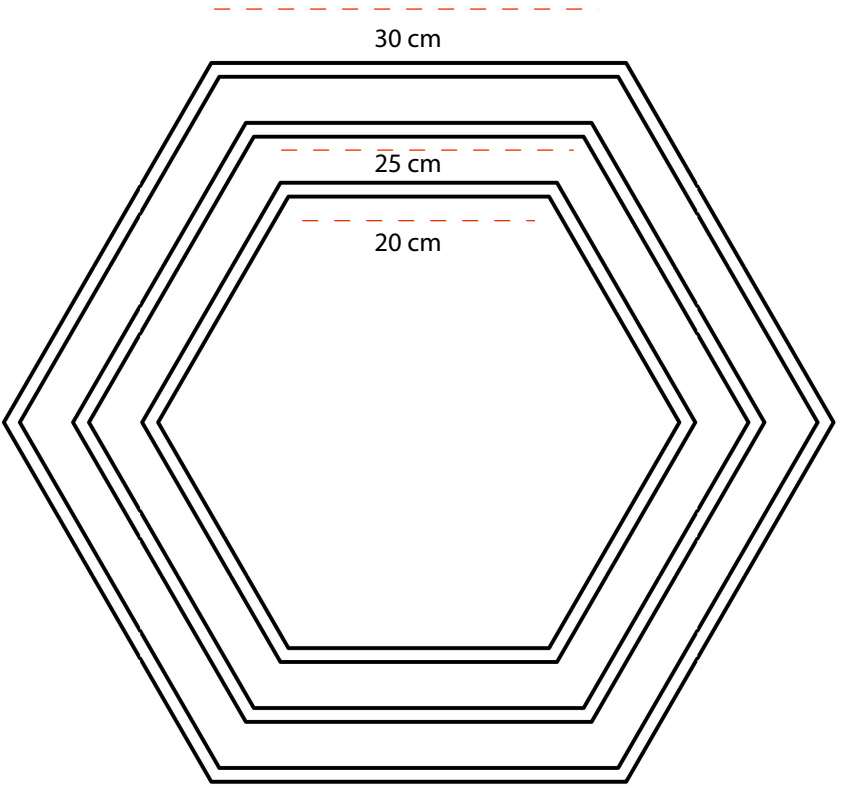
30 cm
25 cm
20 cm

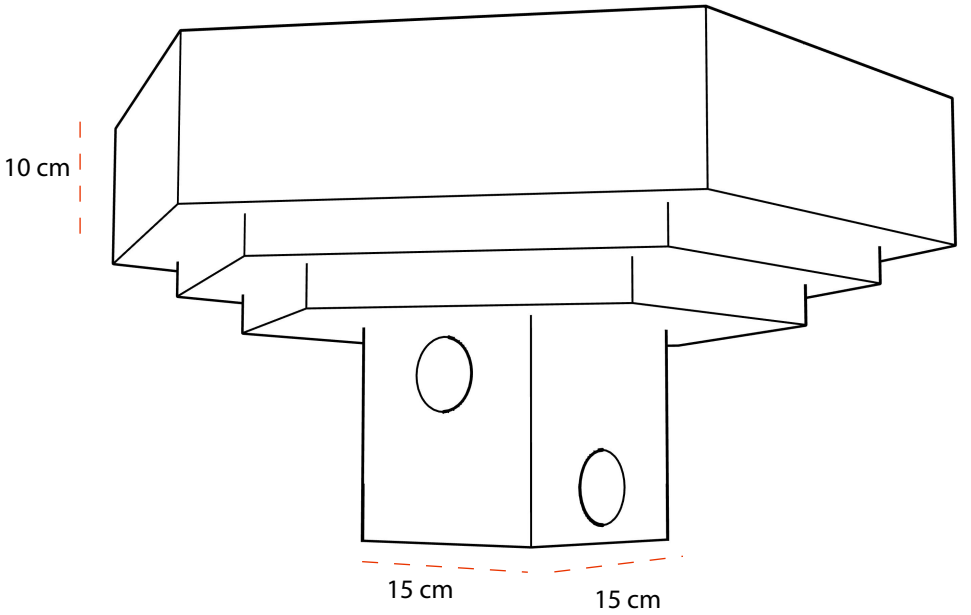
10 cm
15 cm
15 cm