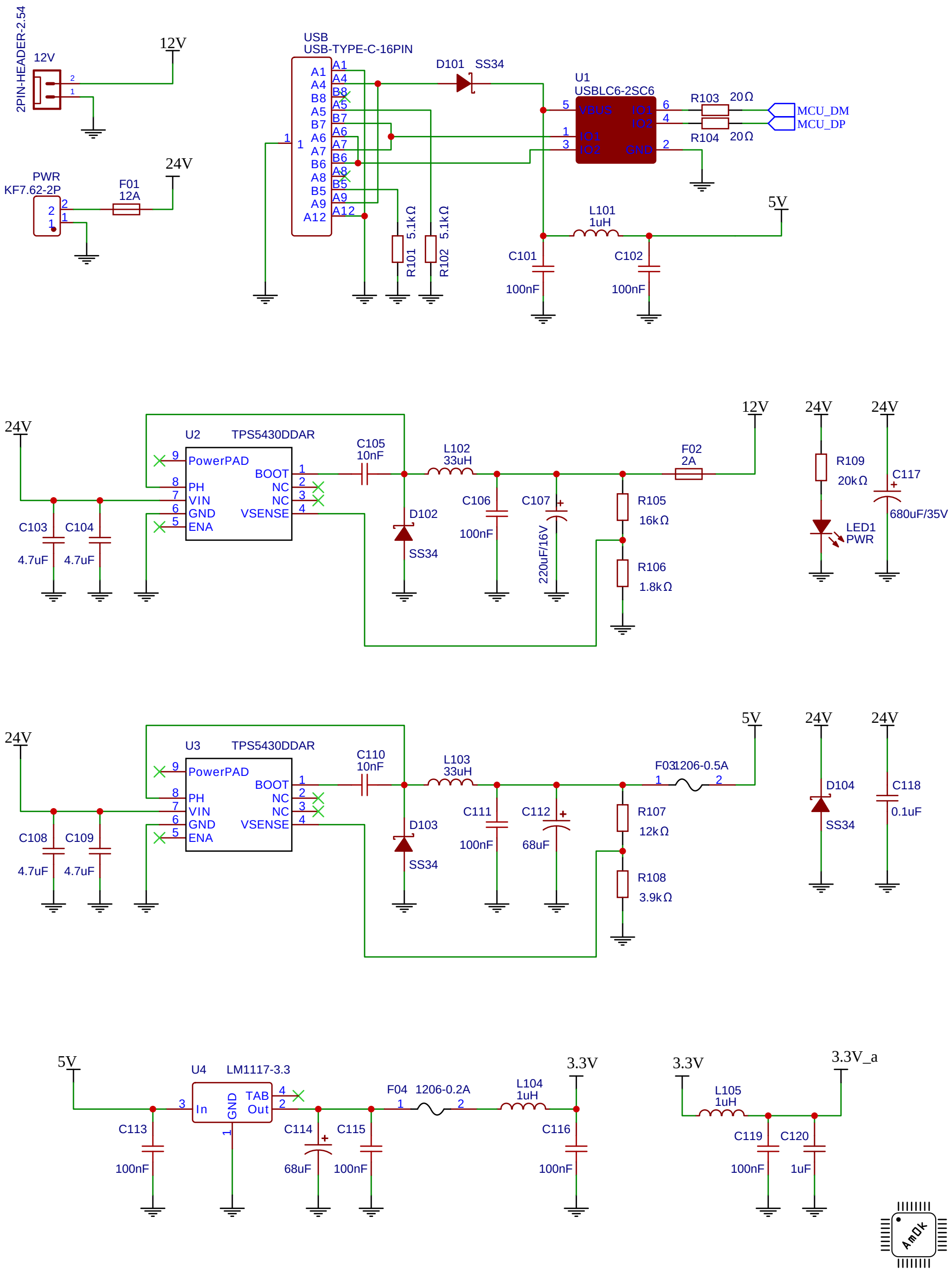
2PIN-HEADER-2.54
12V
12V
PWR
KF7.62-2P
F01
12A
24V
USB
USB-TYPE-C-16PIN
A1 A4 B8 A5 B7 A6 A7 B6 A8 B5 A9 A12
D101 SS34
U1
USBLC6-2SC6
VBUS IO1 IO2 GND
R103 20Ω
R104 20Ω
MCU_DM
MCU_DP
R101 5.1kΩ
R102 5.1kΩ
L101
1uH
5V
C101
100nF
C102
100nF
24V
U2 TPS5430DDAR
PowerPAD
PH VIN GND ENA
BOOT NC NC VSENSE
C105
10nF
L102
33uH
F02
2A
12V
24V
24V
R109
20kΩ
C117
680uF/35V
LED1
PWR
C103 C104
4.7uF 4.7uF
D102
SS34
C106
100nF
C107
220uF/16V
R105
16kΩ
R106
1.8kΩ
24V
U3 TPS5430DDAR
PowerPAD
PH VIN GND ENA
BOOT NC NC VSENSE
C110
10nF
L103
33uH
F03 1206-0.5A
5V
24V
24V
D104
SS34
C118
0.1uF
C108 C109
4.7uF 4.7uF
D103
SS34
C111
100nF
C112
68uF
R107
12kΩ
R108
3.9kΩ
5V
U4 LM1117-3.3
In GND TAB Out
C113
100nF
C114
68uF
C115
100nF
F04 1206-0.2A
L104
1uH
3.3V
C116
100nF
3.3V
L105
1uH
3.3V_a
C119
100nF
C120
1uF

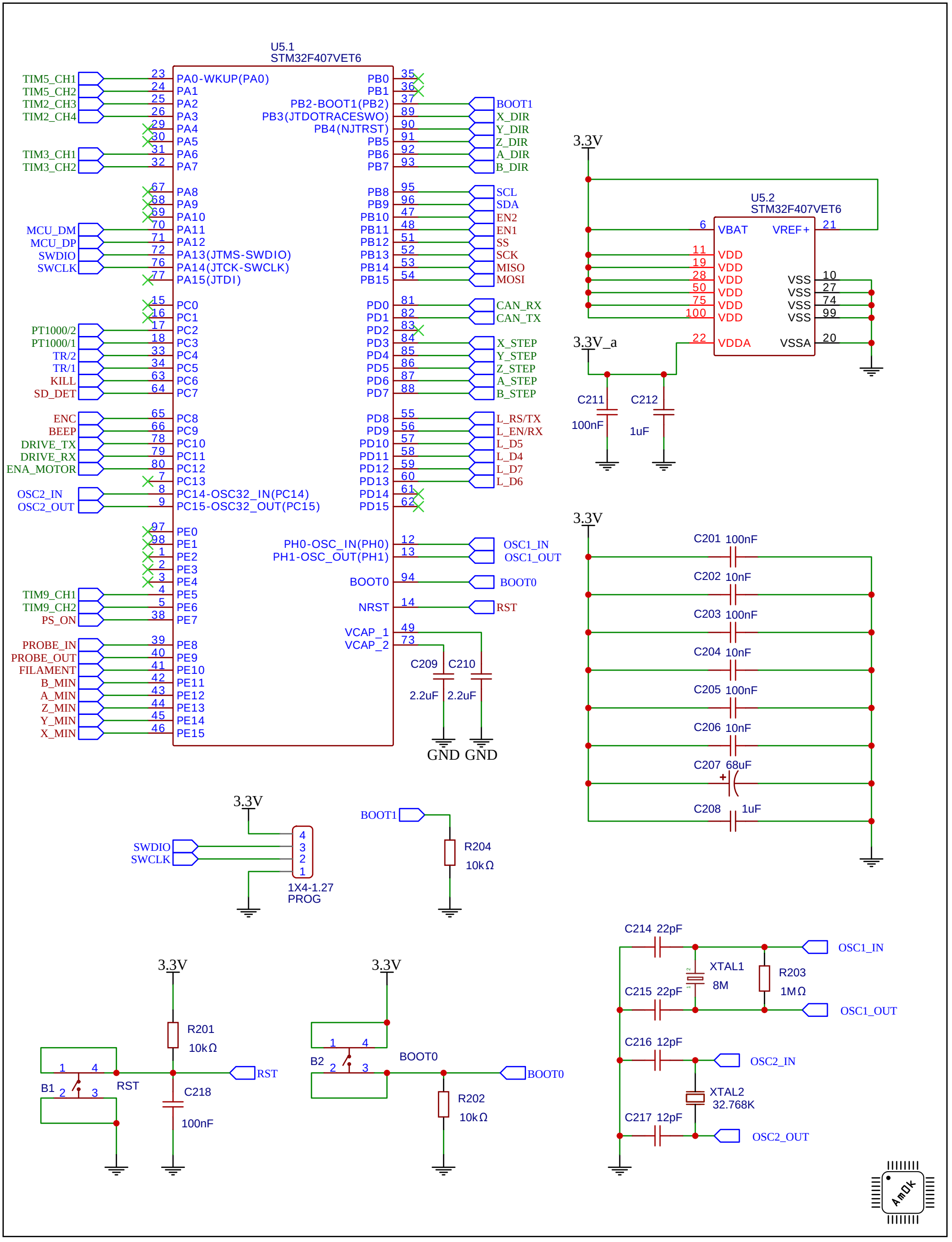
U5.1
STM32F407VET6
TIM5_CH1
TIM5_CH2
TIM2_CH3
TIM2_CH4
TIM3_CH1
TIM3_CH2
MCU_DM
MCU_DP
SWDIO
SWCLK
PT1000/2
PT1000/1
TR/2
TR/1
KILL
SD_DET
ENC
BEEP
DRIVE_TX
DRIVE_RX
ENA_MOTOR
OSC2_IN
OSC2_OUT
TIM9_CH1
TIM9_CH2
PS_ON
PROBE_IN
PROBE_OUT
FILAMENT
B_MIN
A_MIN
Z_MIN
Y_MIN
X_MIN
23 PA0-WKUP(PA0)
24 PA1
25 PA2
26 PA3
29 PA4
30 PA5
31 PA6
32 PA7
67 PA8
68 PA9
69 PA10
70 PA11
71 PA12
72 PA13(JTMS-SWDIO)
76 PA14(JTCK-SWCLK)
77 PA15(JTDI)
15 PC0
16 PC1
17 PC2
18 PC3
33 PC4
34 PC5
63 PC6
64 PC7
65 PC8
66 PC9
78 PC10
79 PC11
80 PC12
7 PC13
8 PC14-OSC32_IN(PC14)
9 PC15-OSC32_OUT(PC15)
97 PE0
98 PE1
1 PE2
2 PE3
3 PE4
4 PE5
5 PE6
38 PE7
39 PE8
40 PE9
41 PE10
42 PE11
43 PE12
44 PE13
45 PE14
46 PE15
35 PB0
36 PB1
37 PB2-BOOT1(PB2)
89 PB3(JTDOTRACESWO)
90 PB4(NJTRST)
91 PB5
92 PB6
93 PB7
95 PB8
96 PB9
47 PB10
48 PB11
51 PB12
52 PB13
53 PB14
54 PB15
81 PD0
82 PD1
83 PD2
84 PD3
85 PD4
86 PD5
87 PD6
88 PD7
55 PD8
56 PD9
57 PD10
58 PD11
59 PD12
60 PD13
61 PD14
62 PD15
12 PH0-OSC_IN(PH0)
13 PH1-OSC_OUT(PH1)
94 BOOT0
14 NRST
49 VCAP_1
73 VCAP_2
BOOT1
X_DIR
Y_DIR
Z_DIR
A_DIR
B_DIR
SCL
SDA
EN2
EN1
SS
SCK
MISO
MOSI
CAN_RX
CAN_TX
X_STEP
Y_STEP
Z_STEP
A_STEP
B_STEP
L_RS/TX
L_EN/RX
L_D5
L_D4
L_D7
L_D6
OSC1_IN
OSC1_OUT
BOOT0
RST
C209 2.2uF
C210 2.2uF
GND GND
3.3V
U5.2
STM32F407VET6
6 VBAT
21 VREF+
11 VDD
19 VDD
28 VDD
50 VDD
75 VDD
100 VDD
10 VSS
27 VSS
74 VSS
99 VSS
22 VDDA
20 VSSA
3.3V_a
C211 100nF
C212 1uF
C201 100nF
C202 10nF
C203 100nF
C204 10nF
C205 100nF
C206 10nF
C207 68uF
C208 1uF
SWDIO
SWCLK
4
3
2
1
1X4-1.27
PROG
BOOT1
R204
10kΩ
R201
10kΩ
B1
RST
C218
100nF
B2
BOOT0
R202
10kΩ
C214 22pF
C215 22pF
XTAL1
8M
R203
1MΩ
C216 12pF
C217 12pF
XTAL2
32.768K
OSC1_IN
OSC1_OUT
OSC2_IN
OSC2_OUT

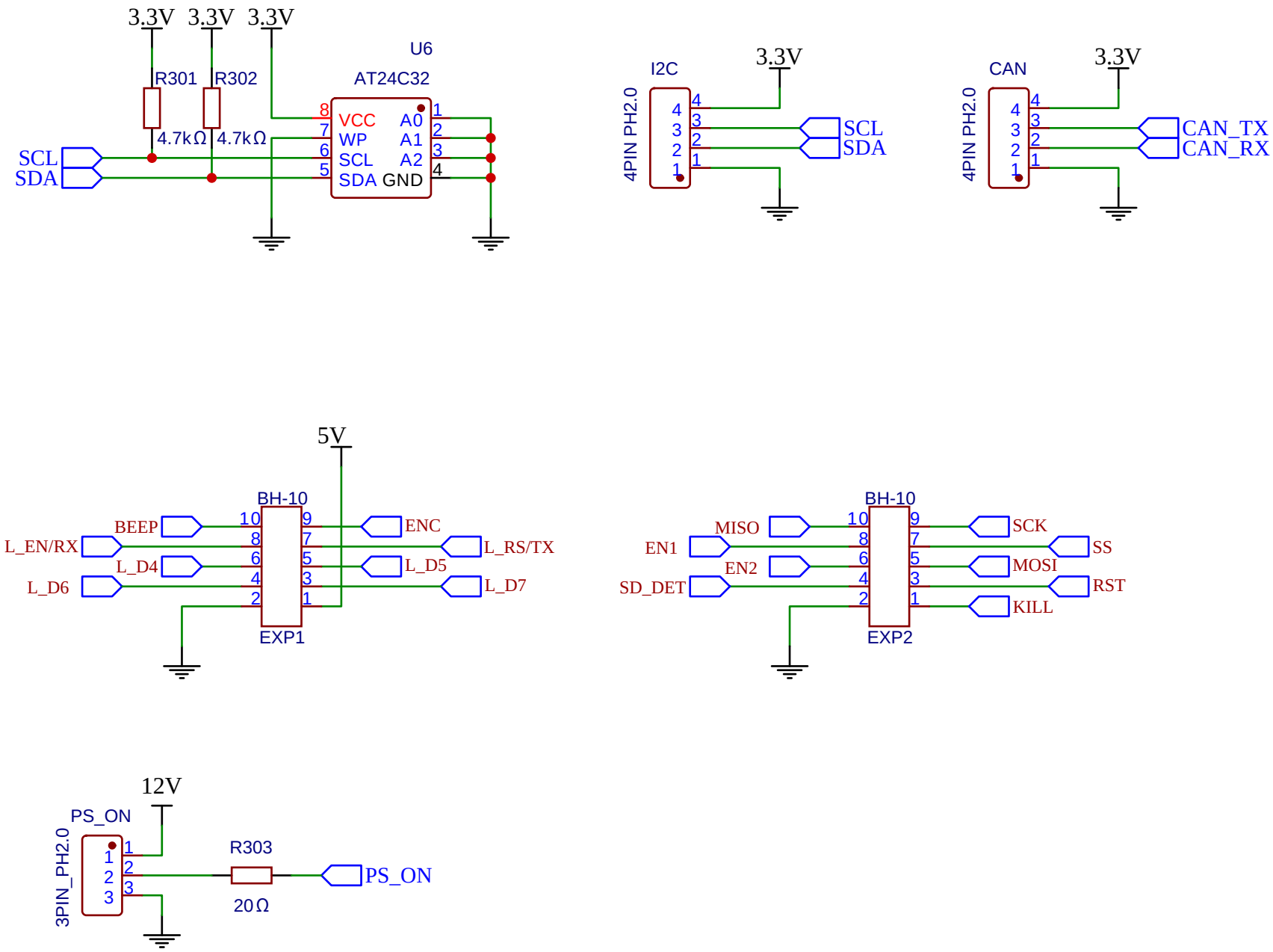
3.3V
3.3V
3.3V
U6
R301
R302
AT24C32
4.7kΩ
4.7kΩ
VCC
WP
SCL
SDA
A0
A1
A2
GND
SCL
SDA
I2C
4PIN PH2.0
3.3V
SCL
SDA
CAN
4PIN PH2.0
3.3V
CAN_TX
CAN_RX
5V
BH-10
BEEP
L_EN/RX
L_D4
L_D6
ENC
L_RS/TX
L_D5
L_D7
EXP1
BH-10
MISO
EN1
EN2
SD_DET
SCK
SS
MOSI
RST
KILL
EXP2
12V
PS_ON
3PIN_PH2.0
R303
20Ω
PS_ON

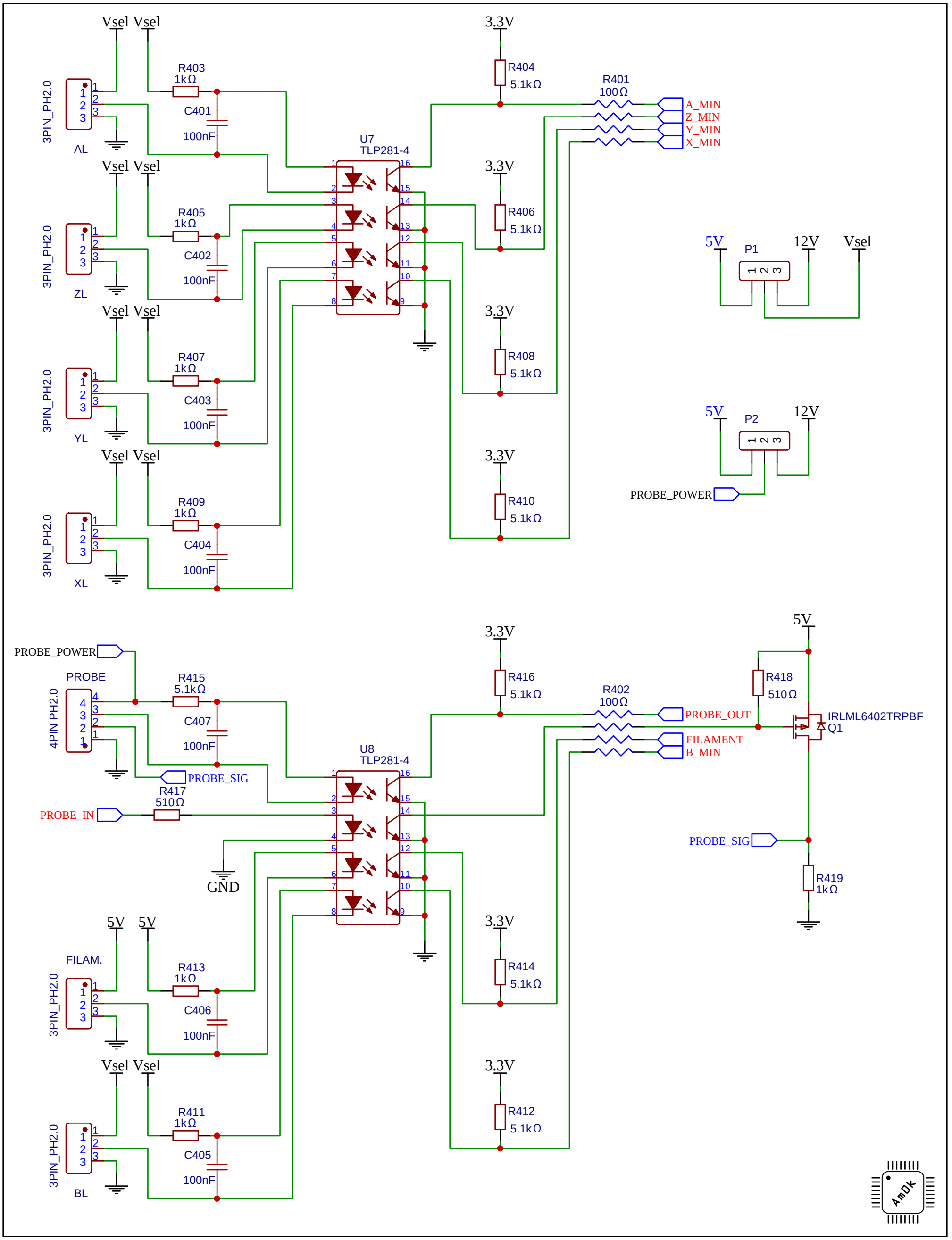
Vsel Vsel
3.3V
R403
1kΩ
C401
100nF
R404
5.1kΩ
R401
100Ω
A_MIN
Z_MIN
Y_MIN
X_MIN
3PIN_PH2.0
AL
U7
TLP281-4
R405
1kΩ
C402
100nF
R406
5.1kΩ
ZL
5V
P1
12V
Vsel
R407
1kΩ
C403
100nF
R408
5.1kΩ
YL
P2
PROBE_POWER
R409
1kΩ
C404
100nF
R410
5.1kΩ
XL
5V
PROBE_POWER
PROBE
4PIN PH2.0
R415
5.1kΩ
C407
100nF
R416
5.1kΩ
R402
100Ω
PROBE_OUT
R418
510Ω
IRLML6402TRPBF
Q1
FILAMENT
B_MIN
PROBE_SIG
R417
510Ω
PROBE_IN
U8
TLP281-4
GND
PROBE_SIG
R419
1kΩ
FILAM.
R413
1kΩ
C406
100nF
R414
5.1kΩ
R411
1kΩ
C405
100nF
R412
5.1kΩ
BL

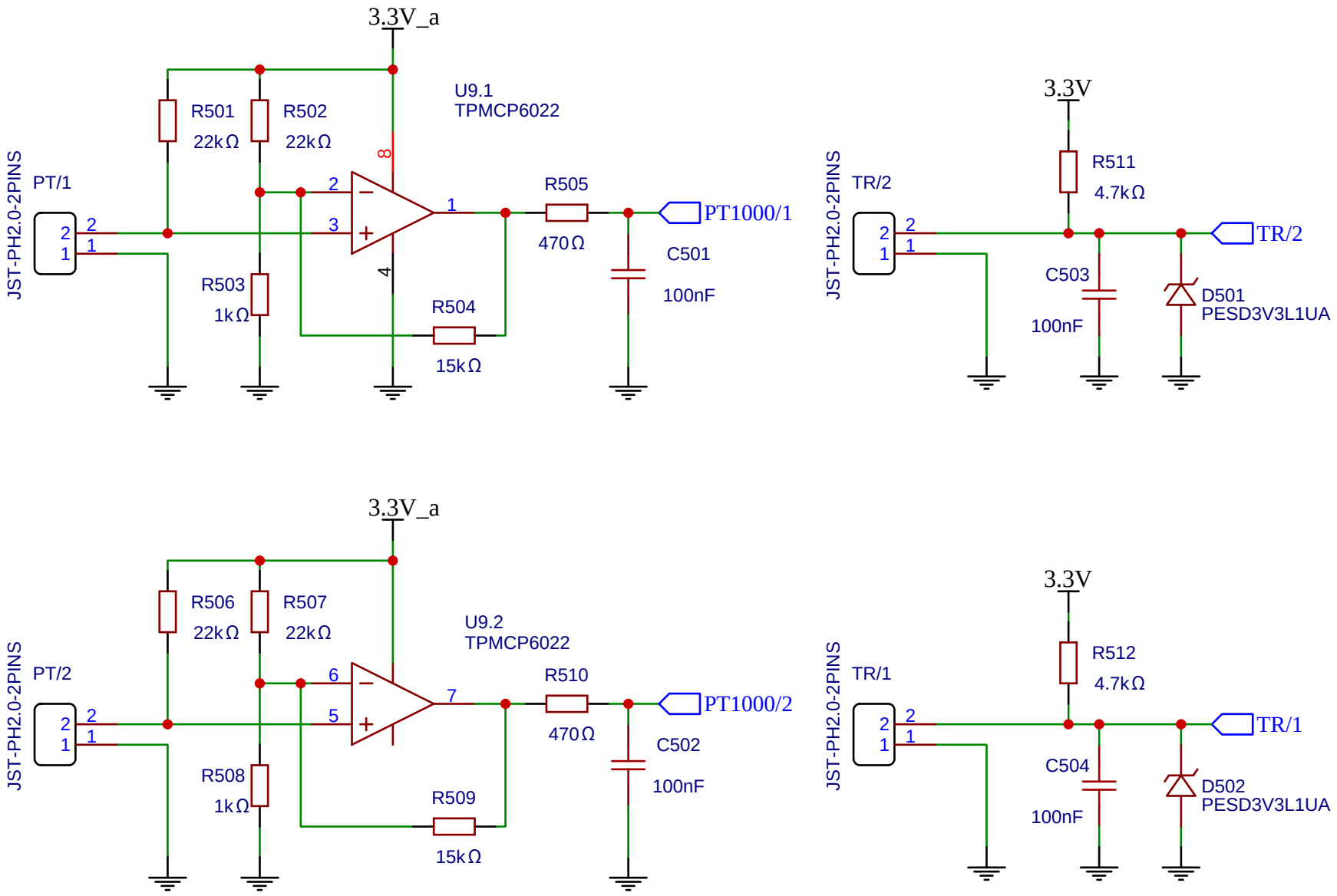
3.3V_a
U9.1
TPMCP6022
R501
22kΩ
R502
22kΩ
PT/1
JST-PH2.0-2PINS
R503
1kΩ
R504
15kΩ
R505
470Ω
C501
100nF
PT1000/1
3.3V
R511
4.7kΩ
TR/2
C503
100nF
D501
PESD3V3L1UA
3.3V_a
U9.2
TPMCP6022
R506
22kΩ
R507
22kΩ
PT/2
R508
1kΩ
R509
15kΩ
R510
470Ω
C502
100nF
PT1000/2
3.3V
R512
4.7kΩ
TR/1
C504
100nF
D502
PESD3V3L1UA

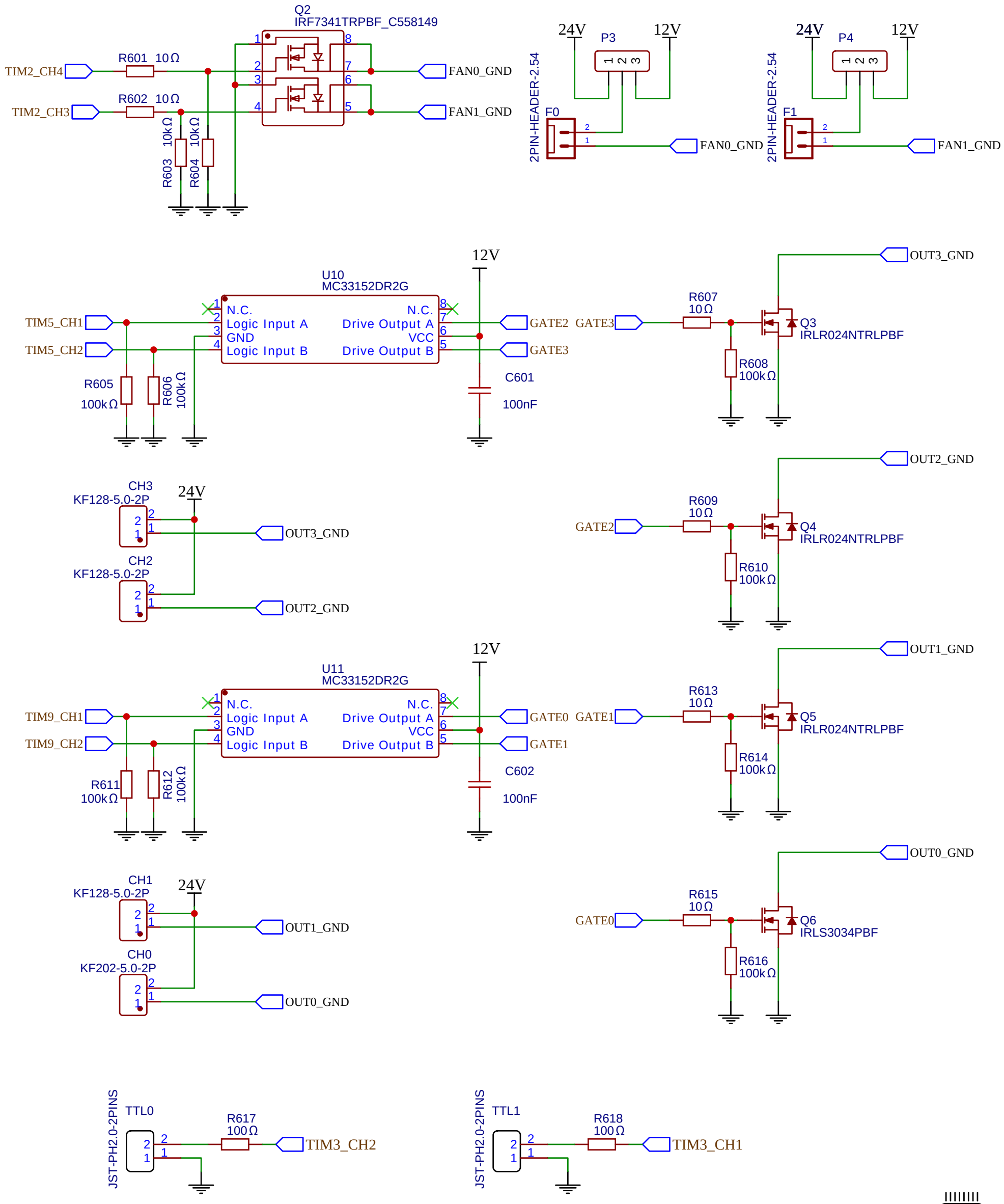
Q2
IRF7341TRPBF_C558149
TIM2_CH4
TIM2_CH3
R601 10Ω
R602 10Ω
R603 10kΩ
R604 10kΩ
FAN0_GND
FAN1_GND
24V
12V
P3
P4
F0
F1
2PIN-HEADER-2.54
U10
MC33152DR2G
N.C.
Logic Input A
GND
Logic Input B
Drive Output A
VCC
Drive Output B
TIM5_CH1
TIM5_CH2
R605 100kΩ
R606 100kΩ
C601
100nF
GATE2
GATE3
R607 10Ω
R608 100kΩ
Q3
IRLR024NTRLPBF
OUT3_GND
CH3
KF128-5.0-2P
CH2
KF128-5.0-2P
OUT2_GND
R609 10Ω
R610 100kΩ
Q4
IRLR024NTRLPBF
U11
MC33152DR2G
TIM9_CH1
TIM9_CH2
R611 100kΩ
R612 100kΩ
C602
100nF
GATE0
GATE1
R613 10Ω
R614 100kΩ
Q5
IRLR024NTRLPBF
OUT1_GND
CH1
KF128-5.0-2P
CH0
KF202-5.0-2P
OUT0_GND
R615 10Ω
R616 100kΩ
Q6
IRLS3034PBF
JST-PH2.0-2PINS
TTL0
TTL1
R617 100Ω
R618 100Ω
TIM3_CH2
TIM3_CH1

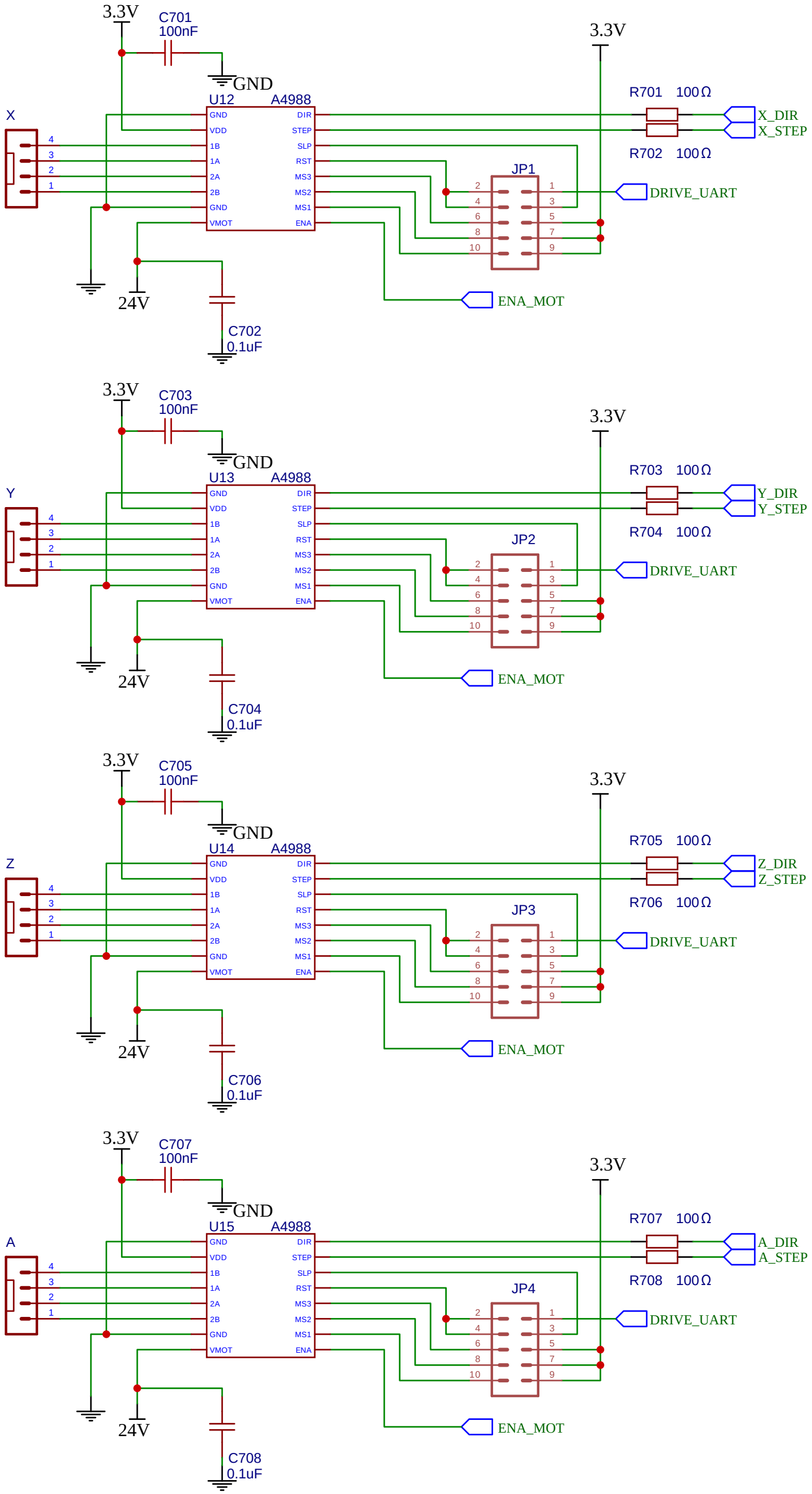
3.3V
C701
100nF
GND
U12
A4988
X
GND
VDD
1B
1A
2A
2B
GND
VMOT
DIR
STEP
SLP
RST
MS3
MS2
MS1
ENA
R701 100Ω
R702 100Ω
X_DIR
X_STEP
JP1
DRIVE_UART
ENA_MOT
24V
C702
0.1uF
C703
100nF
U13
Y
R703 100Ω
R704 100Ω
Y_DIR
Y_STEP
JP2
C704
0.1uF
C705
100nF
U14
Z
R705 100Ω
R706 100Ω
Z_DIR
Z_STEP
JP3
C706
0.1uF
C707
100nF
U15
A
R707 100Ω
R708 100Ω
A_DIR
A_STEP
JP4
C708
0.1uF

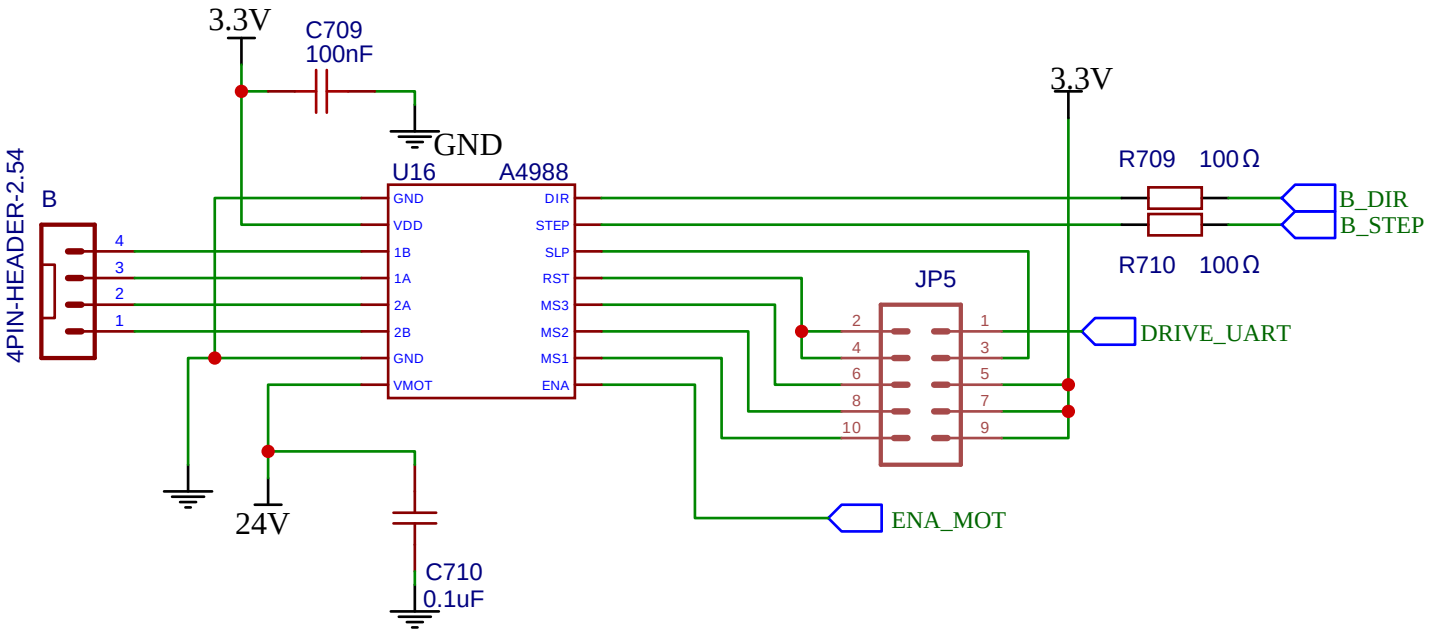
3.3V
C709
100nF
GND
U16
A4988
B
4PIN-HEADER-2.54
GND
VDD
1B
1A
2A
2B
GND
VMOT
DIR
STEP
SLP
RST
MS3
MS2
MS1
ENA
3.3V
R709 100Ω
R710 100Ω
B_DIR
B_STEP
JP5
DRIVE_UART
ENA_MOT
24V
C710
0.1uF

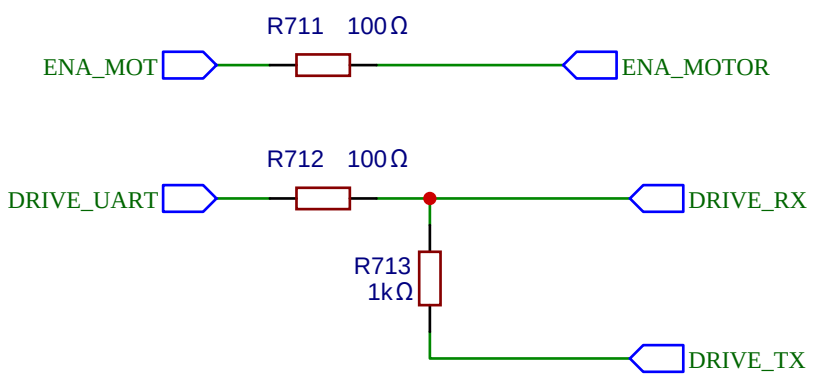
R711 100Ω
ENA_MOT
ENA_MOTOR
R712 100Ω
DRIVE_UART
DRIVE_RX
R713
1kΩ
DRIVE_TX

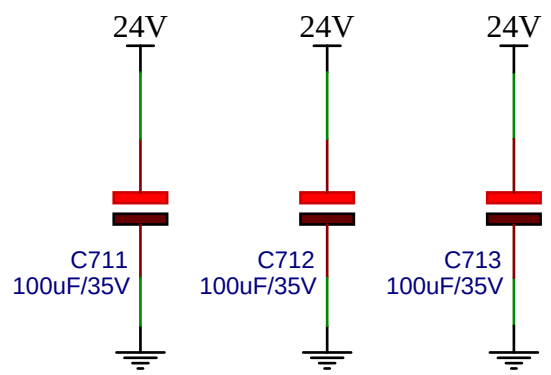
24V
24V
24V
C711
100uF/35V
C712
100uF/35V
C713
100uF/35V