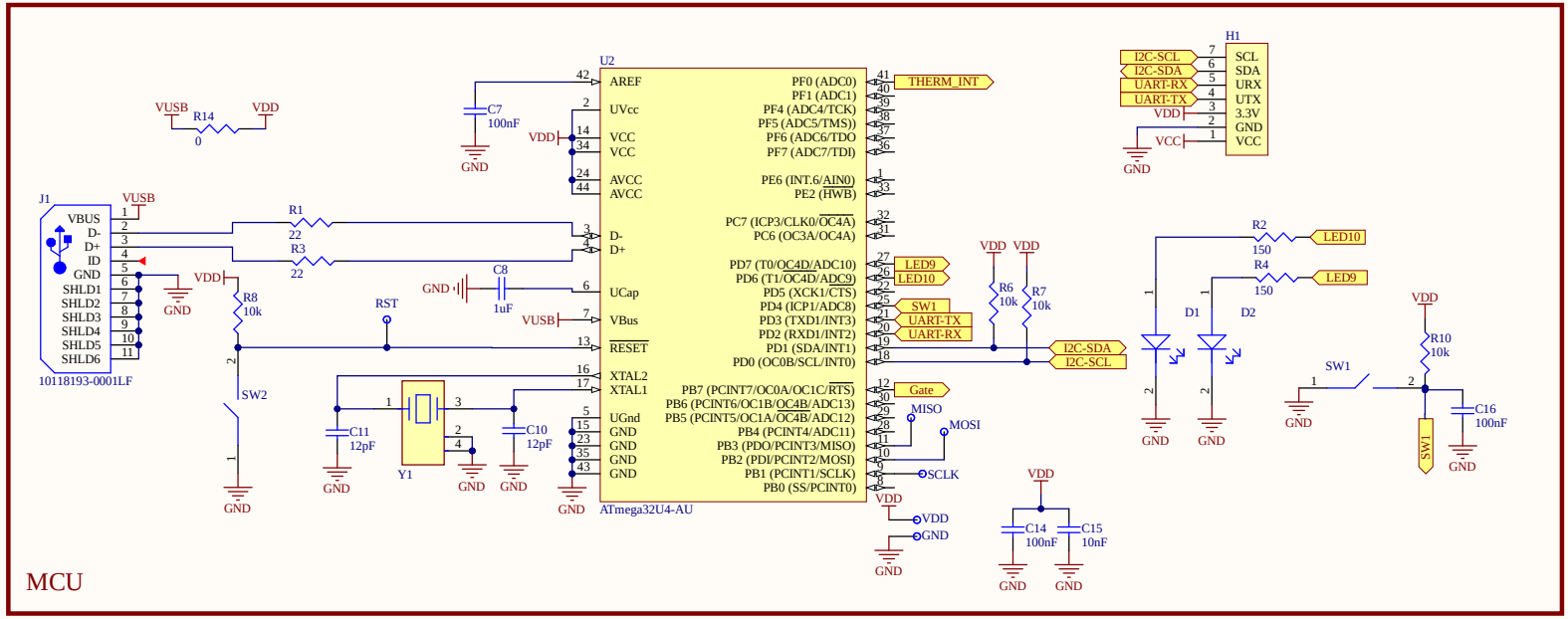

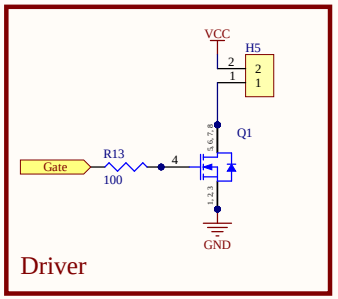

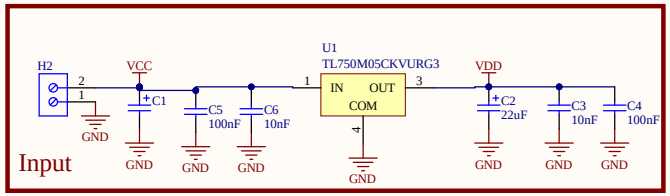

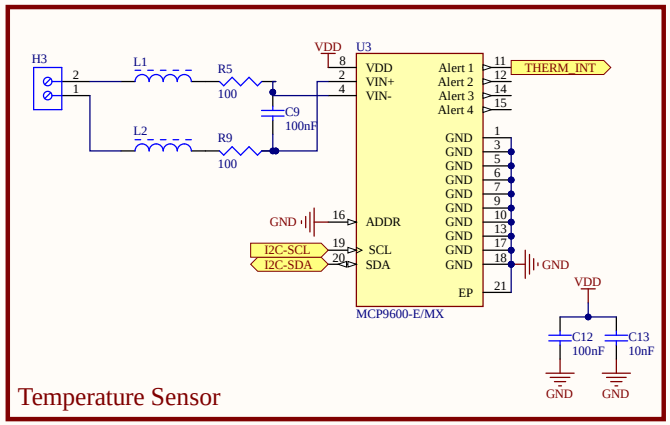

Title: Open Reflow	
Date: 10/02/2023	Time: 08:23:57
Sheet Number: 1 of 1	Enginner: Carl Bugeja

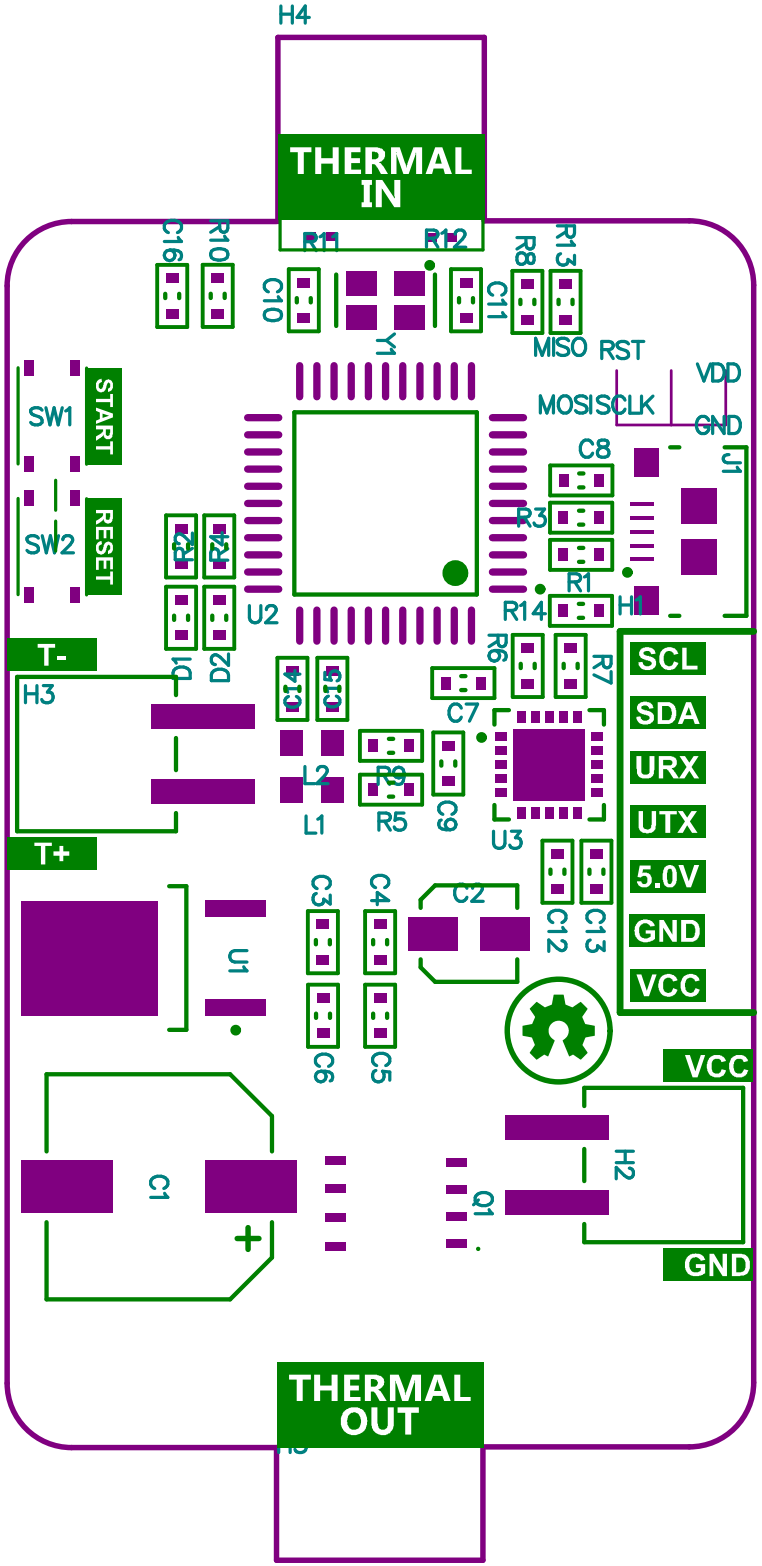
H4
THERMAL IN
C16
R10
R11
R12
C10
C11
R8
R13
Y1
MISO
RST
VDD
MOSI
SCLK
GND
SW1
START
SW2
RESET
C8
J1
R3
R2
R4
R1
U2
R14
H1
D1
D2
T-
H3
C14
C15
R6
R7
C7
SCL
SDA
URX
UTX
5.0V
GND
VCC
L2
R9
C9
L1
R5
U3
T+
C3
C4
C2
C12
C13
U1
C6
C5
VCC
H2
C1
Q1
GND
THERMAL OUT