Design and Implementation of a Microcontroller-Based Home Automation System using Arduino and Proteus Simulation

Complete System Schematic Diagram (Idle State)

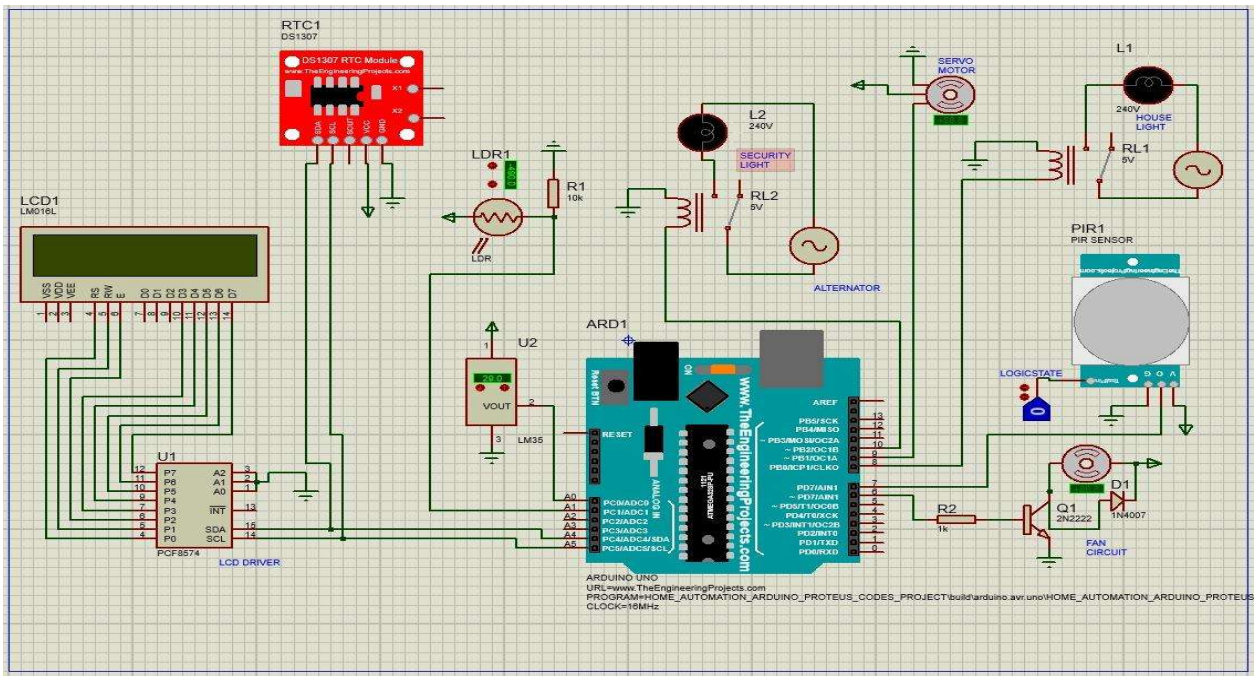

Temperature Monitoring and Automated Cooling

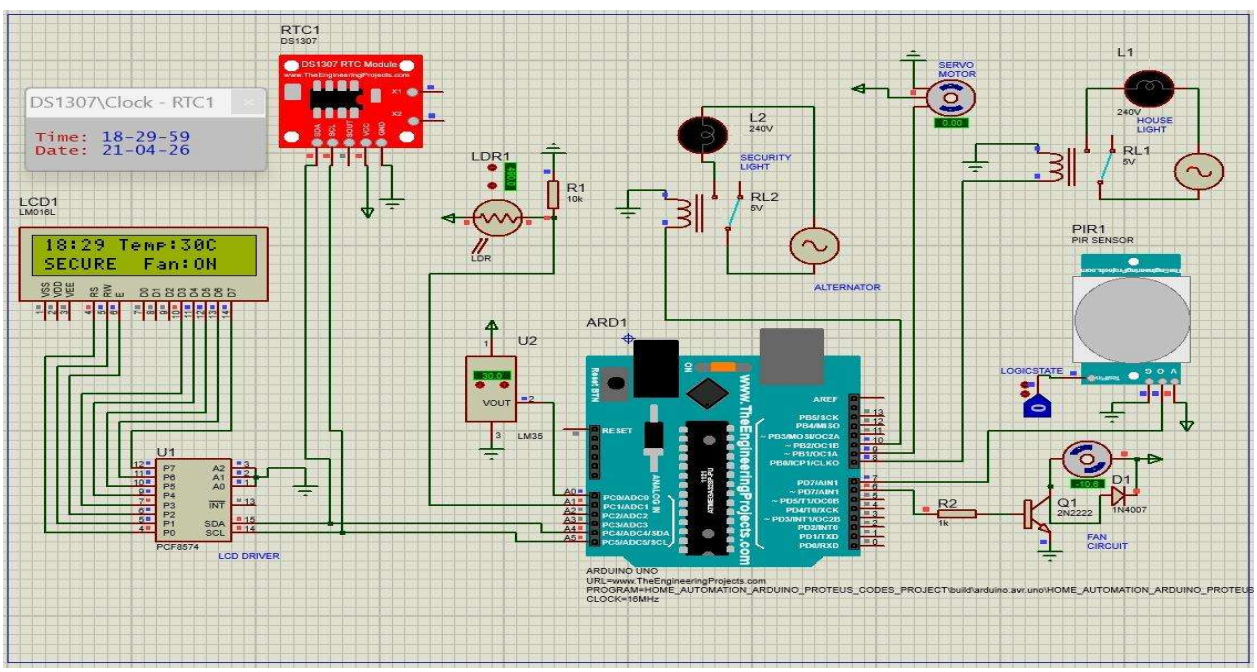

Real-Time Clock (RTC) Triggered Main/House Lighting

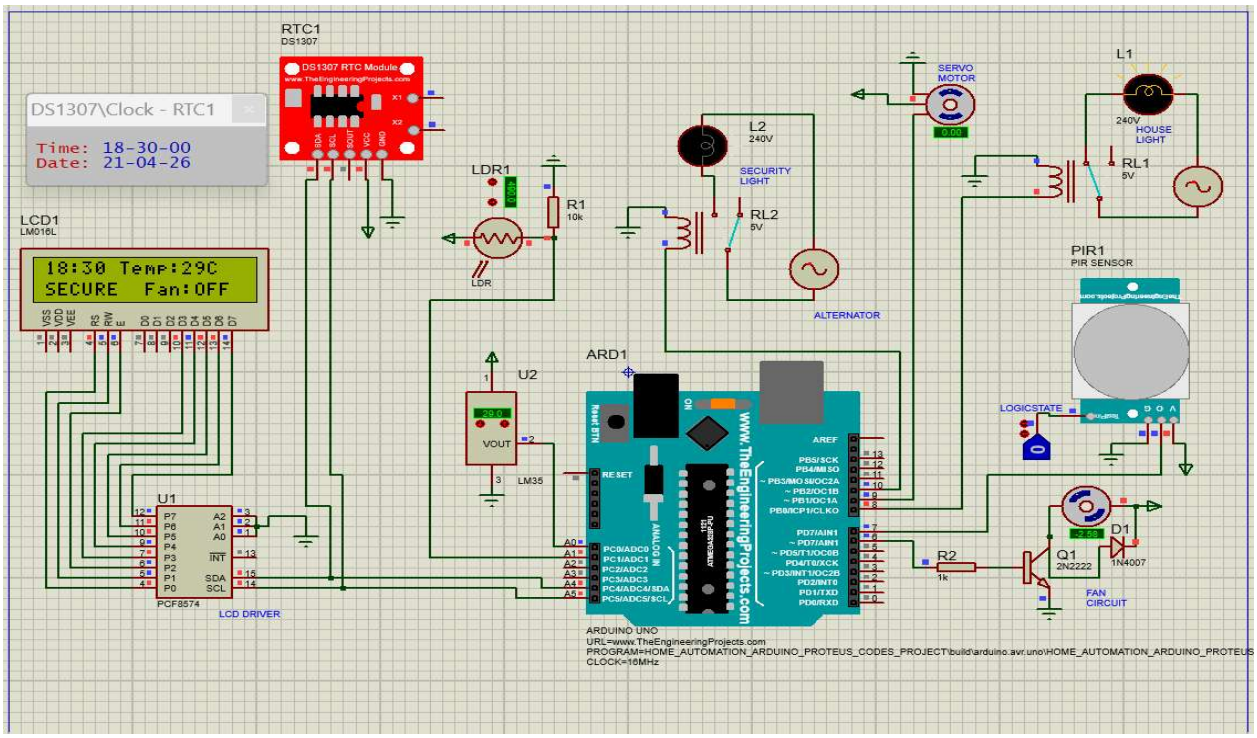

Motion-Triggered Security Alert and Lighting

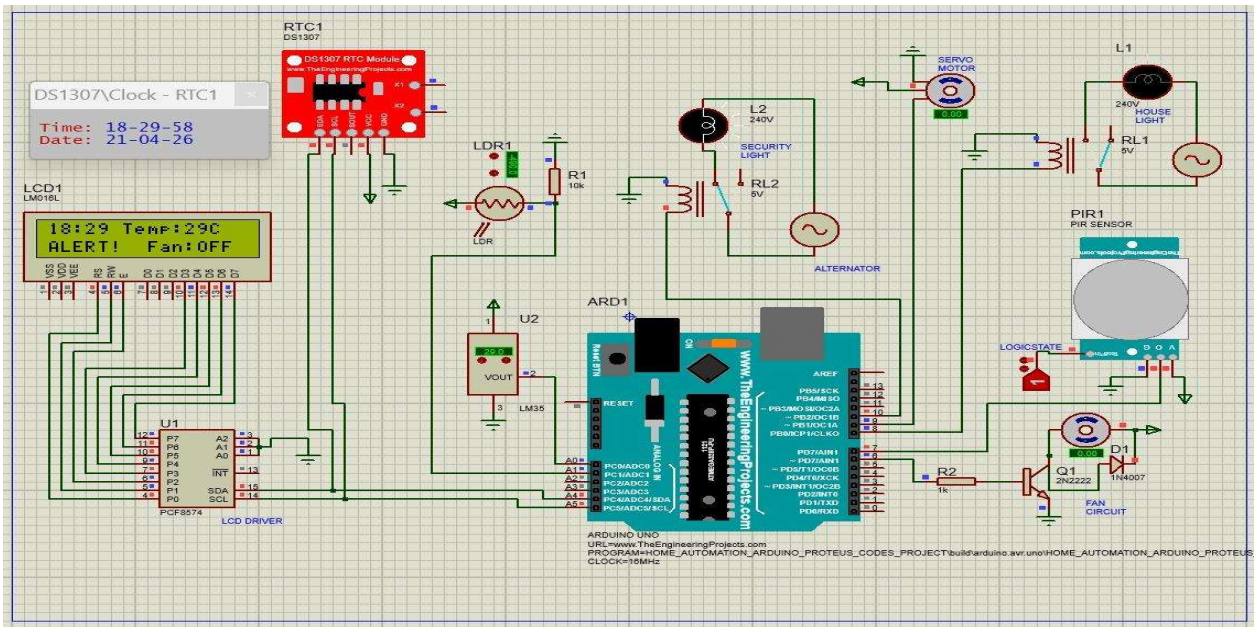

LDR-Based Night Security Activation

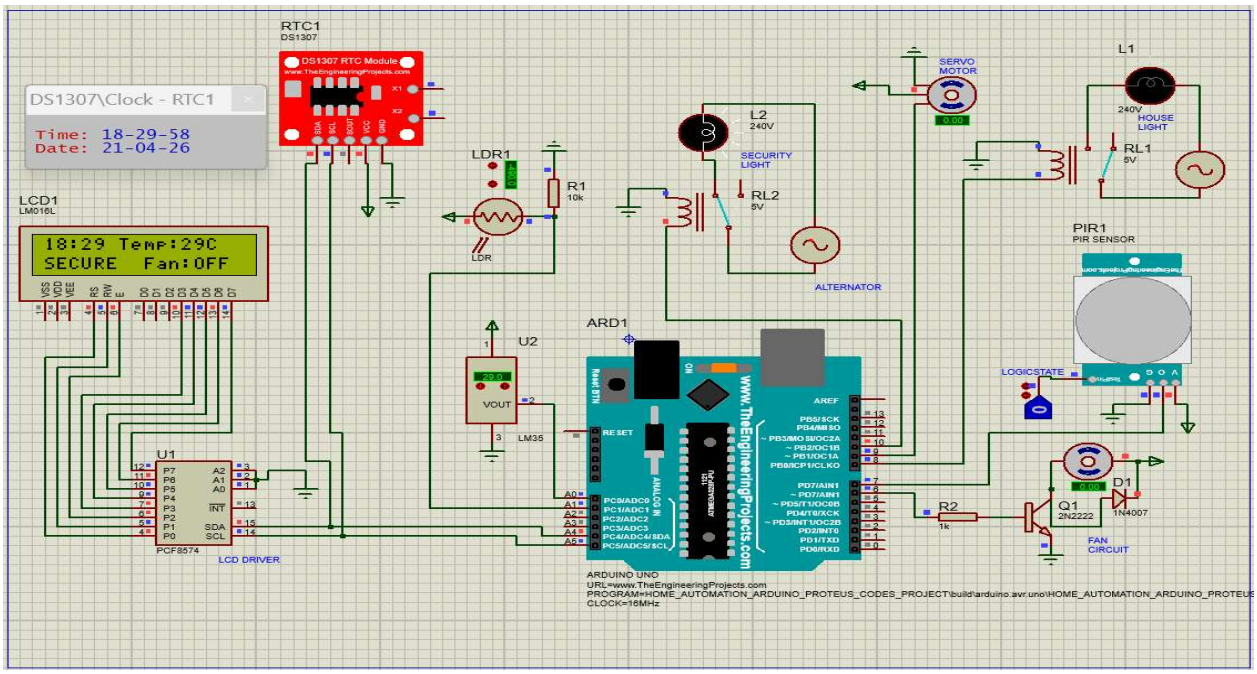
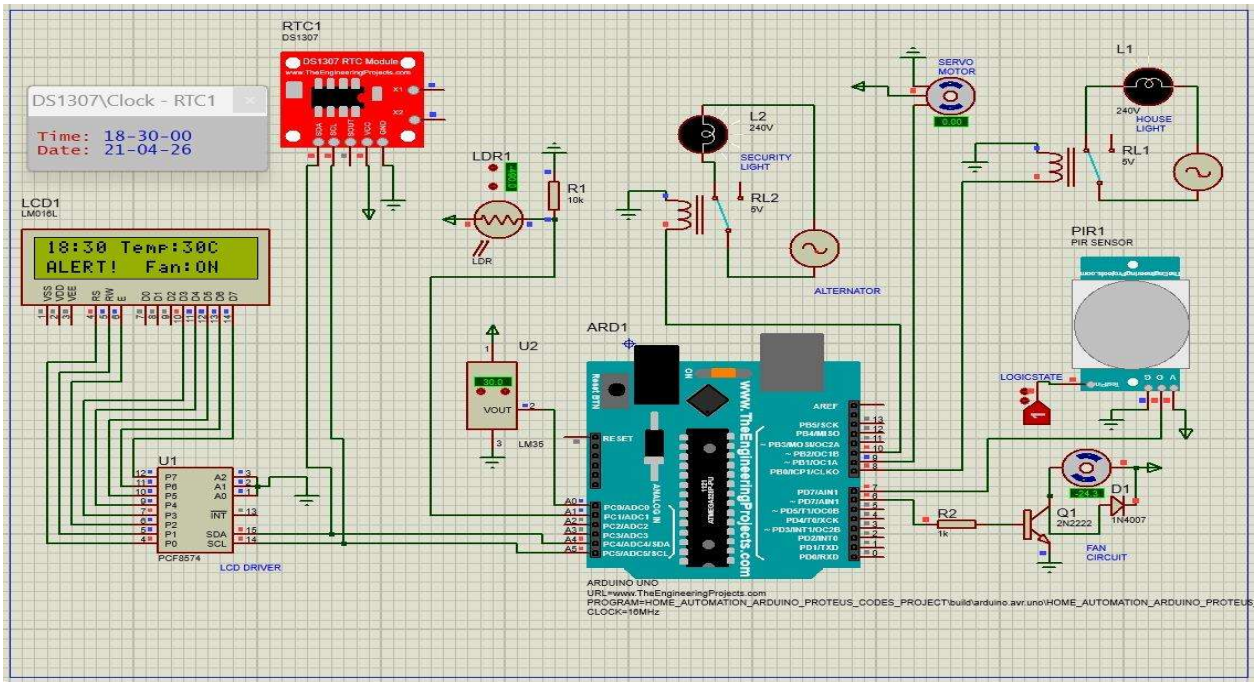
Comprehensive System Functional Test (All Tasks Active)