Table of Contents

1 Introduction and Need Analysis **2**
1.1 Device introduction . . . 2
1.2 Need analysis . . . 2

2 Design specifications **3**
2.1 Degrees of Freedom . . . 3
2.2 Range of Motion . . . 3
2.3 Linkage Mechanism . . . 4

3 Analysis and/or selection rationale of the machine elements and components **5**
3.1 Solid Models . . . 5
3.2 Structural Analysis . . . 6
3.3 Material Selection . . . 7

4 Synthesis and integration of components: Manufacturing and assembly **7**
4.1 Synthesis of components . . . 7
4.1.1 Manufacturing of Linkages . . . 7
4.1.2 Manufacturing of Sleeves . . . 8
4.2 Electrical components . . . 8
4.3 Integration and Full Assembly . . . 9

5 Bill of materials and cost analysis **9**

6 Final product specifications and images **9**

7 Summary and highlights of the project **11**

8 Contributions **12**

Abstract - We aim to create a hand rehabilitation mechanical device which aids a user's rehabilitation and repair of the joints present in the hand by providing sufficient and ample therapeutic motions to the affected fingers. The device can run on independent batteries and does not rely on any electricity, which makes it portable and versatile. Targeting a broad market, the device's appeal lies in its unique form and functionality. We intend to incorporate the bio-mechanical structures used in the human skeleton into this device to mimic the similar motions of a hand in day-to-day activities. The complex Degrees of Freedom in the hand are implemented through a complex and intricate linkage system designed for the smooth simultaneous movement of the joints present in the hand.

1 Introduction and Need Analysis

1.1 Device introduction

This project presents an innovative approach in the design and development of a hand rehabilitation device focused on facilitating joint repair and enhancing hand mobility. This mechanical solution aims to emulate the intricate bio-mechanics of the human hand, providing tailored therapy motions for effective rehabilitation. It is given an electrical dependency through independent battery operation. This gives the device portability and versatility, catering to a broad market segment.

The integration of bio-mechanical structures within its design replicates natural hand movements, mirroring daily activities. Central to its functionality is a sophisticated Degree of Freedom (DoF) system, intricately engineered to enable synchronized and seamless joint movement, simulating the hand's intricate motions. We explore the device's design, emphasizing its potential to revolutionize hand rehabilitation by merging bio-mechanical principles with mechanical engineering for optimized therapeutic outcomes.

The device will consist of various small rigid and stiff linkages designed to withstand the required force of normal hand movements. It will lie on the dorsal side of the hand acting like a glove to mimic its outline of movement. The motors are attached to automate the process using easily available batteries. All the finger joints can be made unique to each individual, if needed.

1.2 Need analysis

This is a device designed with intricate requirements for aiding individuals in their recovery from hand-related injuries or impairments. This initial phase involves assessing various facets, including the target demographic, existing rehabilitation methods, technological advancements, and specific clinical or therapeutic needs.

It also opens up a whole wide range of opportunities like collaborating with medical professionals, therapists, and potential customers to identify specific clinical or therapeutic needs. These may facilitate a deeper comprehension of functional requirements, ergonomic considerations, and therapeutic goals. Understanding the regular challenges faced by therapists and patients in the rehabilitation process will be considered in the design criteria and functionalities crucial for the device's effectiveness.

2 Design specifications

2.1 Degrees of Freedom

A healthy human hand has 25 degrees of freedom[2] as shown in figure 1. However, for this project, we assumed every joint to have only one degree of freedom i.e., we considered only flexion/extension. Also, we have designed the hand rehabilitation device to provide aid only to the 5 fingers and not to the wrist and the carpometacarpal (CMC) joint.

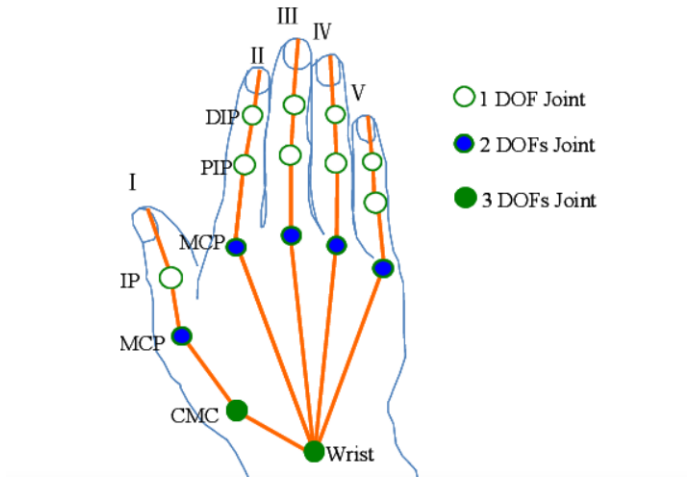

Figure 1: Degrees of freedom of various joints in a human hand

We have designed a linkage mechanism to provide flexion for the DIP, PIP, and MCP joints in unison. This further reduces the degrees of freedom for curling a finger to one. Since each finger now has only one degree of freedom, only one actuator/servo-motor would be required to curl a finger. This helps us immensely to reduce the bulk of our hand rehabilitation device.

2.2 Range of Motion

The below table tabulates the healthy range of motion [1] for each finger joint

		Flexion (°)	Extension (°)	Abduction/Adduction (°)
Thumb	MCP	75–80	0	--
	DIP	75–80	5–10	--
Index	MCP	90	30–40	60
	PIP	110	0	--
	DIP	80–90	5	--
Middle	MCP	90	30–40	45
	PIP	110	0	--
	DIP	80–90	5	--
Ring	MCP	90	30–40	45
	PIP	120	0	--
	DIP	80–90	5	--
Little	MCP	90	30–40	50
	PIP	135	0	--
	DIP	90	5	--

Figure 2: Healthy Range of motion for each finger joint

For our project, we have followed the range of motion for each finger joint as given in the table below. These values represent the curling of the fingers while squeezing a hand therapy ball, which is used for rehabilitation purposes.

MCP	PIP	DIP
50°	32°	19°

Table 1: Range of motion provided by the linkage mechanism

2.3 Linkage Mechanism

We have used *linkage mechanism designer and simulator(software)* to simulate a 2D linkage mechanism for the 5 fingers. A combination of revolute joints and sliding mechanisms were designed to accomplish the 1 DOF mechanism.

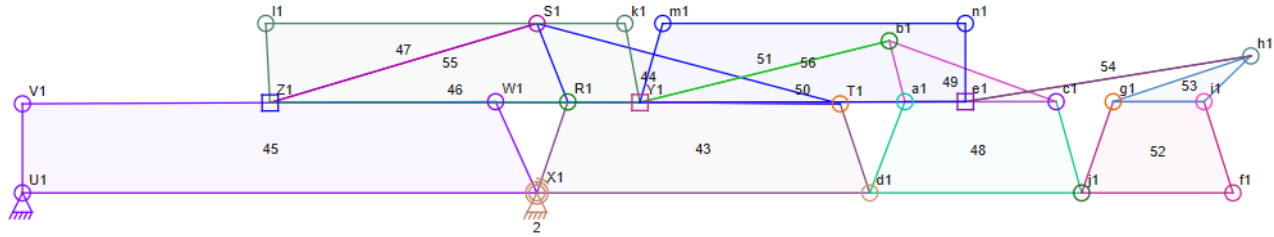

Figure 3: Index Finger as designed in the linkage mechanism designer and simulator(a)

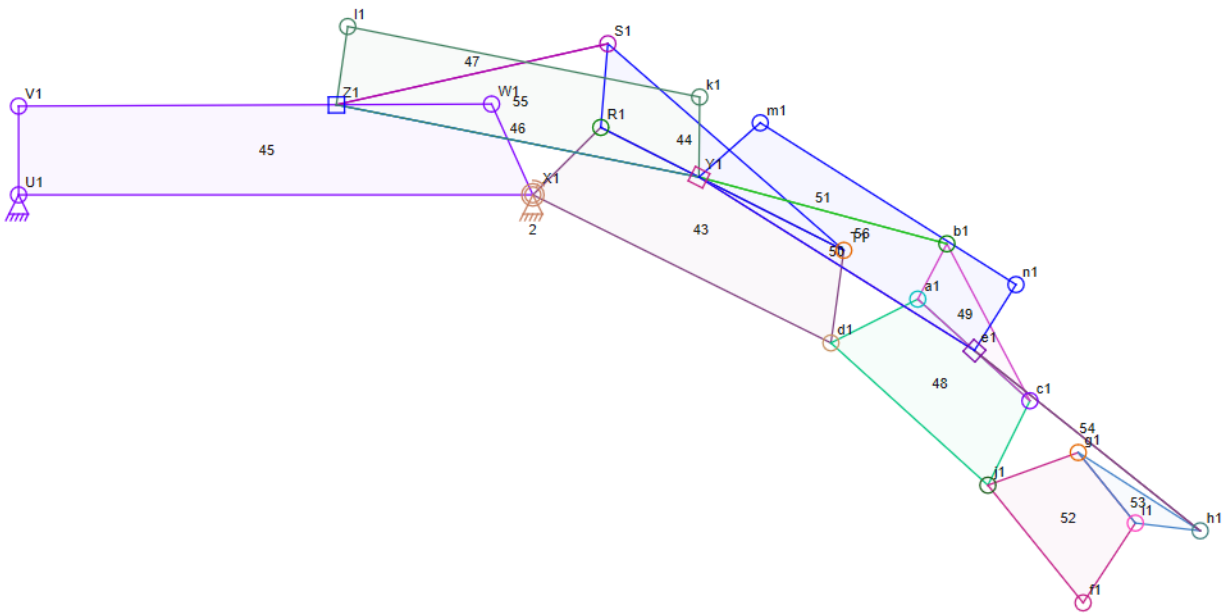

Figure 4: Index Finger as designed in the linkage mechanism designer and simulator(b)

3 Analysis and/or selection rationale of the machine elements and components

3.1 Solid Models

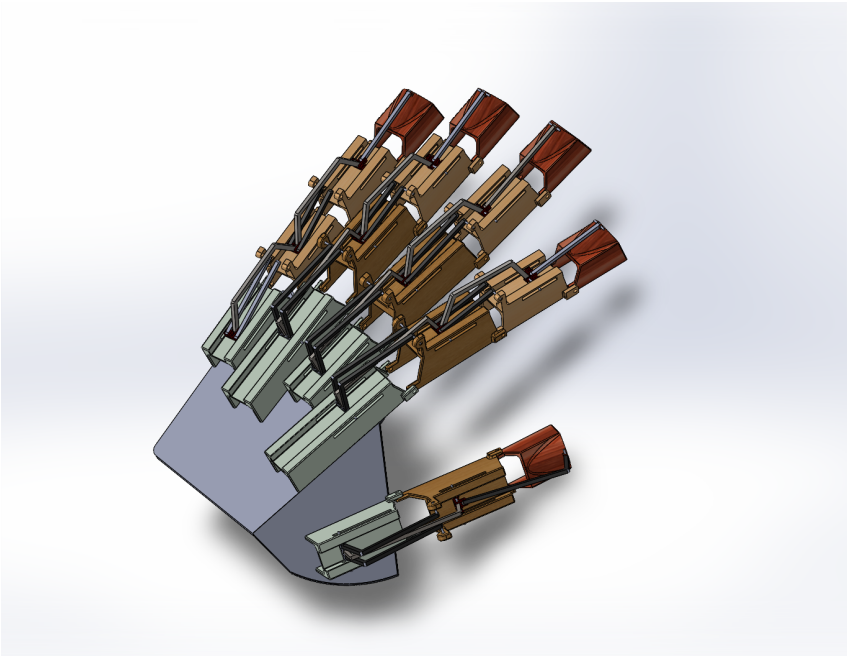

Figure 5: Solid model - 1

Figure 6: Solid model - 2

3.2 Structural Analysis

The CAD models designed were analysed using ANSYS software were static structural and transient analysis were done. The results came out satisfactory and was well under critical conditions.

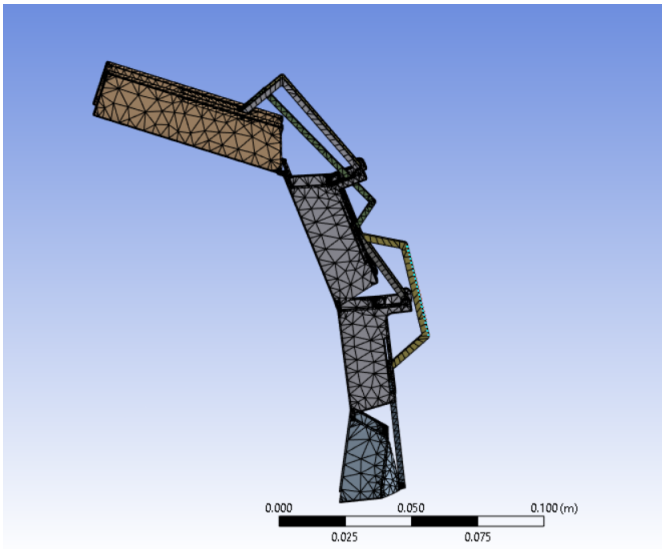

Figure 7: Mesh generated

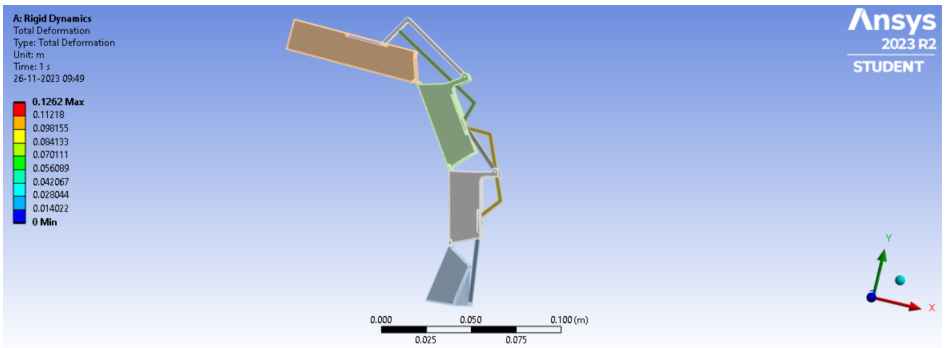

Figure 8: Deformation analysis

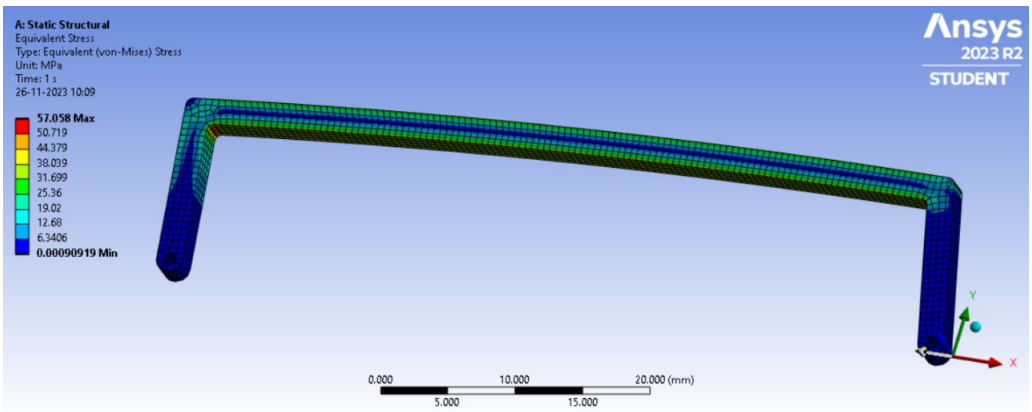

Figure 9: Stress Analysis

3.3 Material Selection

We have chosen PLA for the 3D printing of the back plate, knuckle sleeves, and Acrylic for the linkages. These components need to be sturdy enough to withstand the forces involved in rehabilitation exercises while maintaining a degree of flexibility. PLA offers a good balance of rigidity and strength, making it suitable for components like knuckle sleeves, and backplates. It happens to be one of the easiest materials to properly 3D print due to its low melting temperature and minimal distortion. PLA filaments are the ideal beginning point for 3D printing because of their simplicity of usage and low warping problems. Also it is generally more cost-effective than some other 3D printing materials, which can be crucial, especially in the prototyping and development stages of a project. PLA is also one of the most environmentally friendly 3D printing materials and, unlike ABS, is biodegradable.

Acrylic is a lightweight material, which is advantageous in applications where minimizing weight is crucial. For rehabilitation devices that users need to handle or wear, a lightweight design can enhance comfort and usability. It is relatively easy to machine and fabricate. It can be cut, drilled, and shaped with common tools, allowing for efficient and cost-effective manufacturing. This ease of fabrication can be important when producing custom linkages tailored to the specific needs of the rehabilitation device. It also exhibits resistance to many chemicals, which contributes to the durability and longevity of the linkages.

4 Synthesis and integration of components: Manufacturing and assembly

4.1 Synthesis of components

4.1.1 Manufacturing of Linkages

Our initial approach for manufacturing the linkages involved machining using steel. However, since creating holes of size 1 mm using EDM was not possible, we moved on to 3D printing using ABS material, a popular choice known for its strength and durability. However, this method posed challenges that were incompatible with the stringent requirements of our rehabilitation device. Notably, the printed links exhibited undesirable flexibility, a characteristic that runs counter to the necessity for rigidity in linkage components. Furthermore, the holes required for assembly suffered from imprecise printing, due to the smaller dimensions of the holes. This lack of precision compromised the structural integrity crucial for the effective functioning of the rehabilitation device, prompting a reevaluation of our machining strategy.

Recognizing the limitations of 3D printing, we shifted to laser cutting acrylic sheets, opting for a material with a thickness of 2mm. This transition proved to be a significant advancement in the machining process for several reasons mentioned below.

- Precision and Accuracy
  Laser cutting offered unparalleled precision, allowing us to craft intricate designs with exacting measurements. The 2mm thickness of the acrylic sheets provided the required structural stability. The accuracy achieved through laser cutting ensured that each linkage component adhered to the specified dimensions in our design, contributing to the overall precision of the device.

- Material Properties
  The decision to use 2mm thick acrylic sheets was based on the strength that we hoped to achieve with the total weight being a constraint. Acrylic sheets provide the required strength essential for enduring the repetitive motions involved in hand rehabilitation.

Figure 10: Laser-cut segments of sleeves and 3D printed Sleeves

- Streamlined Assembly Process
  The transition to laser-cut acrylic sheets streamlined the assembly process. Each linkage component seamlessly fit together, eliminating the issues of flexibility and misalignment encountered with 3D printing. The precise cuts facilitated an efficient assembly, contributing to the overall robustness of the device.

4.1.2 Manufacturing of Sleeves

The prototype was decided to be made using light-weight materials making it more practical to use for a patient. The sleeves and links needed to be manufactured using different techniques, which were decided based on the dimensions and strength requirement that we ask from them

3D Printing: Each distinct sleeve was manufactured using 3D printing, utilizing PLA as our primary material. While 3D printing is time-consuming, we opted for it due to the easy availability of PLA material and 3D printers. This method, despite its time investment, facilitated the manufacturing of intricate parts without significant complications. Consequently, it allowed us to explore innovative design choices without concerns about manufacturing complexities.

Laser Cutting: Our prototype comprised multiple sleeves, each intended to function as independent moving parts. Ensuring these sleeves fit and worked seamlessly together was crucial. Recognizing the time-intensive nature of 3D printing, we required a rapid prototyping method to assess the fitting of the sleeves efficiently. Laser cutting, known for its speed, primarily operates in two dimensions, presenting a challenge for our entirely 3D structure. To address this, we segmented the sleeves into multiple individual 2D elements. These were then assembled to form each sleeve. Leveraging laser cutting for rapid iterations, we finalized the design before executing the 3D printing of the final product.

4.2 Electrical components

We are allotting 1 motor to each finger to facilitate 1 DoF motion. Total DoF will be 5. The motors are very small so as to keep the device compact. We have given a sinusoidal wave function to the movement of motor such that it traverses uniformly over the crank.

A 9V battery is being used to run 1 motor. We could change this by placing all motor wires together and deriving power directly from electricity. We have used batteries to increase portability and compactness.

4.3 Integration and Full Assembly

In the integration and full assembly of our hand rehabilitation device, we encountered challenges in the connection and slider components. Initially, our preference was to 3D print tiny sliders; however, the intricacies of our design made it impractical for this technology. Subsequently, we explored the possibility of using tiny pins as sliders, providing precision for joint movements. Unfortunately, the unavailability of sufficiently small pins for our intricate design prompted us to adopt an alternative approach.

For the connection of linkages, our initial consideration was tiny pins. Since finding appropriately sized pins proved challenging, we decided to employ wires as connectors for now. This strategic choice allows for flexibility and adaptability, enabling dynamic responses to various hand movements during rehabilitation. While addressing the challenges posed by the unavailability of tiny pins and intricate 3D printing requirements, our commitment to continuous refinement of assembly techniques remains unwavering. We aim to deliver an advanced, user-centric solution that optimizes hand rehabilitation through innovative slider and linkage connections in this dynamic and evolving field.

5 Bill of materials and cost analysis

Component	**Quantity**	**Price**
Servo Motors (1 kgF.cm)	5	825
Arduino uno	5	1345
PLA	1kg	1416
3D printing cost		1800
Laser Cutting cost		400
Pins and wires	1 box	180
Total		5966

Table 2: Bill of Materials

6 Final product specifications and images

The rehabilitation device that we created aimed to achieve a range of motion of a normal human hand, was achieved. The product uses a set of 5 servo motors (**SG90**) , which was integrated with a crank mechanism provides the motion for the 5 fingers. Each finger is provided with 1 degree of motion in the initial prototype, more degrees of freedom can be achieved to mimic a human hand to a better extend.
The final prototype was made with PLA material 3d printed for the finger sleeves and the connecting links Laser printed using 2mm acrylic sheets. The servo motors are controlled with Arduino Uno, and set of wires working efficiently for the prototype.

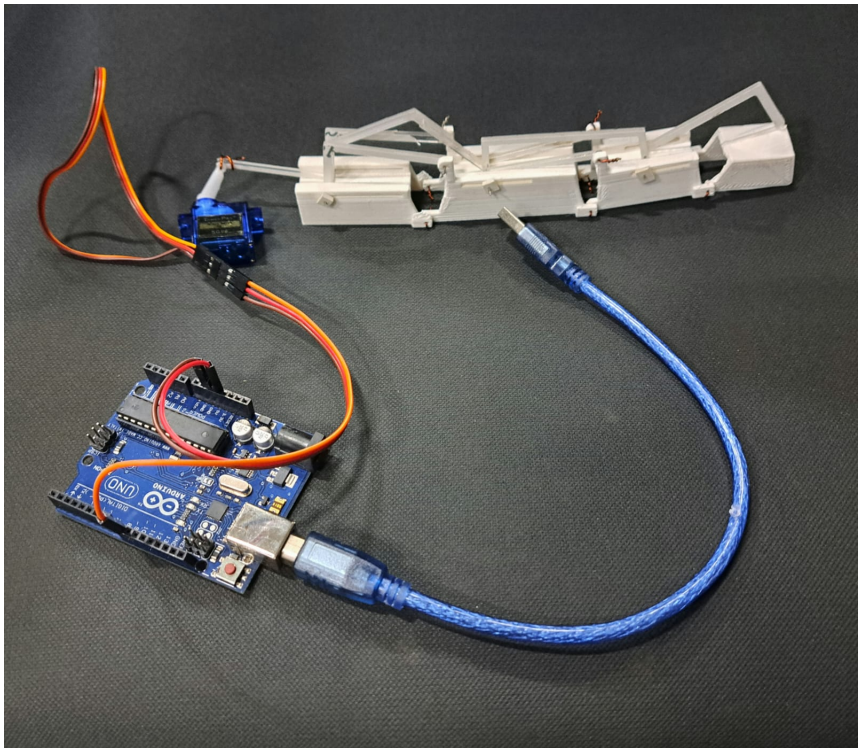

Figure 11: Individual finger connected to Servo motor and Arduino UNO

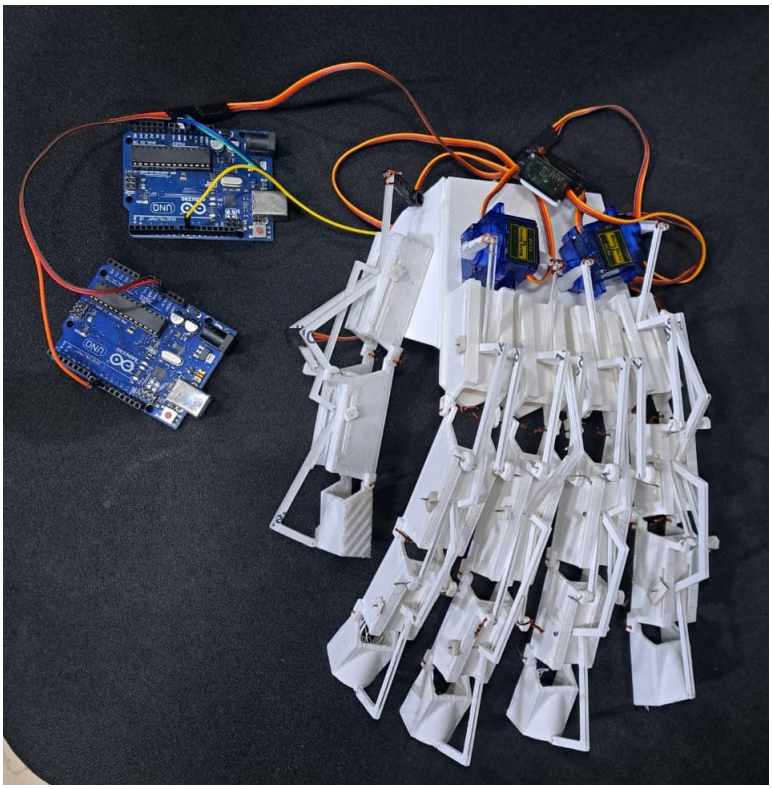

Figure 12: Final Prototype

7 Summary and highlights of the project

The project aimed to provide a rehabilitation for stroke patients whose, mobility is compromised most of the time. With the help of our product ,we could potentially help the patients to aid movement at the fingers, hoping to provide a huge relief to them.

The basic movements of a human hand was mimicked, resulting in the 5 degrees of motion which would be providing aid in completing common day to day actions like grabbing a bottle, lifting light objects and many more.

The prototype achieves its 5 degrees of freedom using a slider crank mechanism, and linkage connections, mimicking the movement of the fingers. All five fingers were designed for an average sized human hand. The prototype was designed in such a way that make it have a high strength to weight ratio, leading to the selection of light-weight materials like acrylic, ABS and PLA.

The product had different prototypes , in which we had used different materials which we had shortlisted from the material index that we needed. The prototypes made with acrylic and ABS material although decently strong, had their own disadvantages. PLA material proved to be the best for the dimensions of the finger that we were aiming for and the strength we wanted to achieve.

The main highlight of our product could be that it can be easily customised according to the users hand dimensions and is light enough to avoid adding stress to the body. The cost of creating this prototype is way less than what is being asked for in the market, making it more affordable to the user.

8 Contributions

Sr. No.	Name & Roll No.	Percentage Contribution	Tasks
1	Amal Thomas (200100020)	12.5%	Mathematical modelling, Electrical, Assembly
2	Divyanshu Meena (200100060)	6%	3D printing and laser cutting from SINE lab, Material Procurement
3	Faheem M Yoonus (20D100009)	13%	CAD Modelling, Ansys Analysis, Assembly
4	Harshita Agarwal (20D100010)	12%	Ansys Analysis,Kinematics, Assembly
5	Jigmat Chosdol (200100075)	9.5%	CAD Modelling,Kinematics, Assembly
6	K S Varun (200100088)	11.5%	Mathematical modelling, Electrical, Assembly
7	Kaushikraj Maharajan (20D100012)	10.5%	Mathematical modelling, Electrical, Assembly
8	Mrinal Thakare (20D100018)	6.5%	Material Procurement, Assembly
9	Pothala Sowmyasri (200100118)	7%	Material Procurement, Assembly
10	Ragasree R K (200100126)	11.5%	Ideation of design, CAD Modelling, Structural Analysis, Assembly

Table 3: Task Contributions

References

[1] Kabir R et al. "Hand Rehabilitation Devices: A Comprehensive Systematic Review". In: (2022). URL: https://doi.org/10.3390/mi130710338.

[2] Xiaopeng Yang et al. "Development and Evaluation of a 25-Degree of Freedom Hand Kinematic Model". In: (2008). URL: https://api.semanticscholar.org/CorpusID:107057848.