Ashford spinning wheel treadle mechanism

ME754 - Textile Machines Design & Automation

Amal Thomas

Table of Contents

1 Existing Mechanism **3**
1.1 Images . . . 3
1.2 Description . . . 4

2 Kinematic Sketch **4**

3 Simulation of Original Mechanism in Software **5**

4 Kinematic Analysis of Original Mechanism: Simulation in Software **6**
4.0.1 Displacement . . . 7
4.1 Displacement Plots . . . 7
4.1.1 Trace . . . 8
4.2 Velocity . . . 9
4.3 Acceleration . . . 9
4.4 Comment . . . 9

5 Dynamic Analysis of Original Mechanism: Simulation in Software **10**
5.1 Total Mass . . . 10
5.2 Torque/Force . . . 10
5.3 Power . . . 10

6 Alternate Linkage **10**

7 Kinematic Analysis of Alternate Linkage: Manual Calculation **11**
7.1 Velocity Analysis . . . 11
7.2 Acceleration Analysis . . . 12

8 Kinematic Analysis of Alternate Linkage: Simulation in Software **13**
8.1 Modeling the alternate mechanism . . . 13
8.2 Displacement . . . 15
8.3 Trace . . . 16

9 Dynamic Analysis of Alternate Linkage: Simulation in Software **16**
9.1 Total Mass . . . 16
9.2 Torque/Force . . . 16
9.3 Power . . . 16

10 Comparison of Original and Alternate Mechanism **17**
10.1 Displacement Comparison . . . 17
10.2 Trace Comparison . . . 18
10.3 Torque/Force Comparison . . . 18
10.4 Power Comparison . . . 18

11 Comments **19**
11.1 Error Analysis 19
11.2 Index of Merit 19

References **19**

1 Existing Mechanism

The treadle mechanism of an Ashford traditional spinning wheel is chosen for this project.

1.1 Images

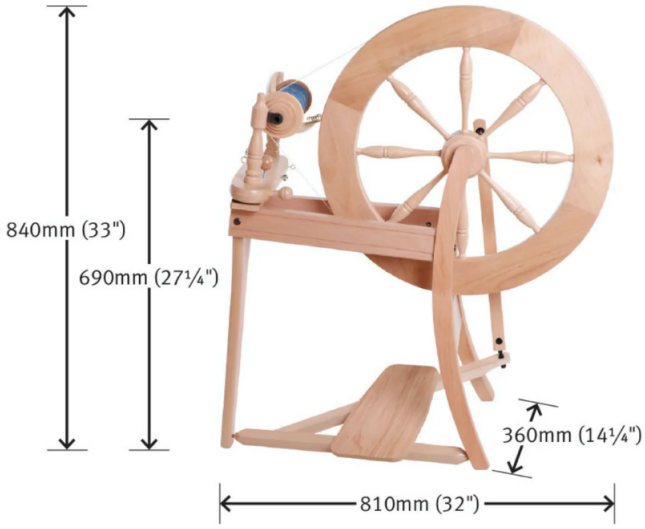

Figure 1: Dimensions of an Ashford traditional spinning wheel[1]

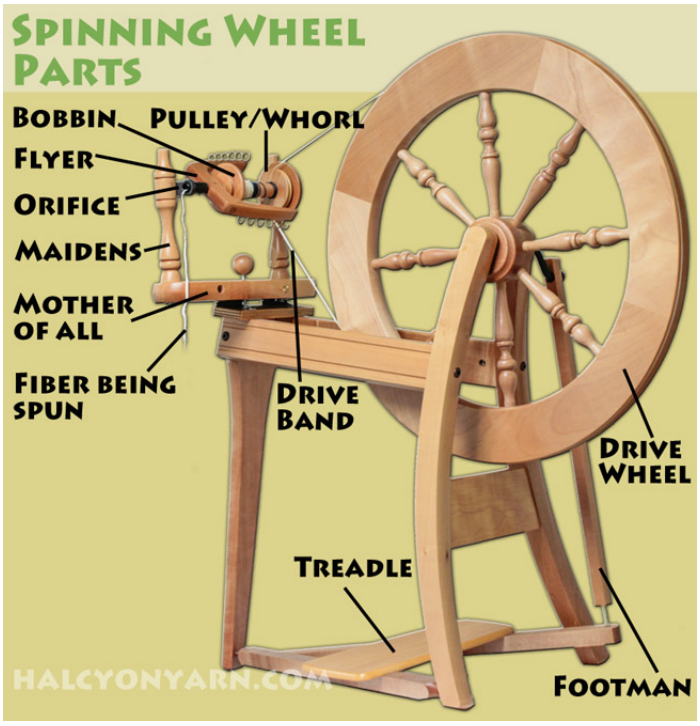

Figure 2: Parts in an Ashford traditional spinning wheel[2]

1.2 Description

The Ashford traditional spinning wheel is operated by the spinner's foot rather than their hand or a motor. The spinner sits and uses a foot treadle to rotate the drive wheel through a crankshaft and connecting rod mechanism. This setup allows the spinner to have both hands free for drafting fibers, which is essential for the short draw spinning technique commonly practiced on this type of wheel. Most treadle wheels typically utilize a flyer-and-bobbin system to twist the yarn and wind it onto a spool simultaneously. These wheels can come in single- or double-treadle configurations.
The expected speed of the wheel is about 500 rpm.

2 Kinematic Sketch

The below figure shows the parts of the treadle mechanism.

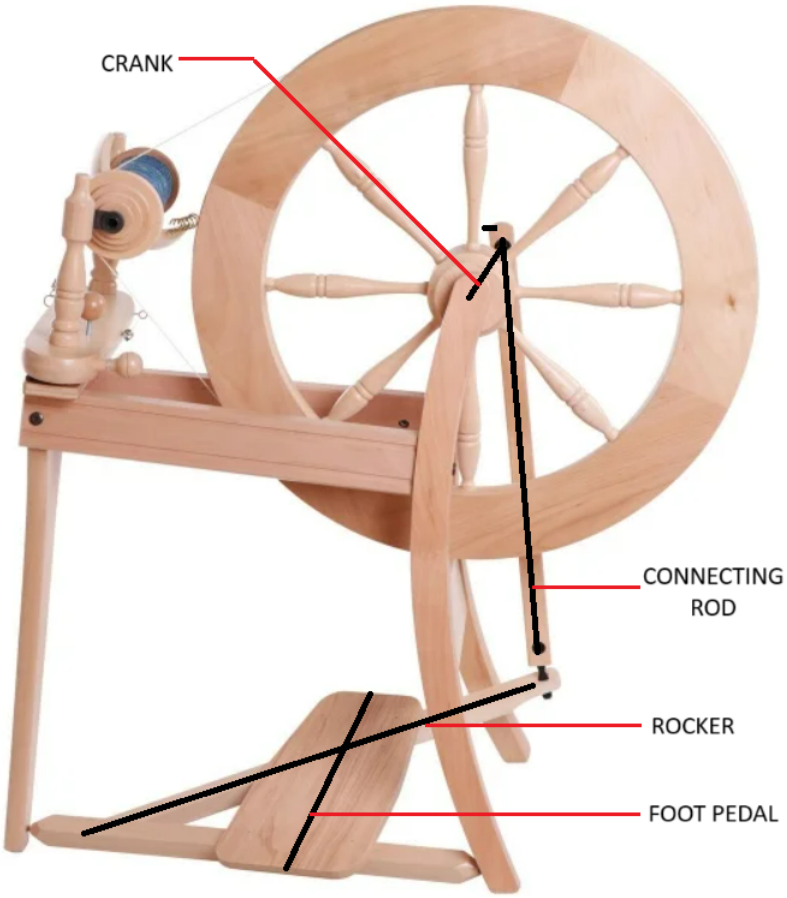

Figure 3: Kinematic sketch

The crank (or the wheel) and the connecting rod lie on the same plane. The foot pedal lies on the plane perpendicular to the plane of the crank as shown above. Also, the rocker lies on a different plane as shown above. The frame of the machine is the fixed linkage. Both the rocker and foot pedal are connected to the frame (fixed linkage) through revolute joints. The foot pedal rests on the rocker and thus physical contact is maintained between them near their centers as shown.
The rocker is connected to the connecting rod with the help of a string. Since the rocker and

connecting rod are in different planes, a revolute joint cannot be used for joining them. When the rocker moves down, the string is in tension and pulls the connecting downwards. When the rocker moves up, the inertia of the flywheel helps in moving the crank upwards. The crank rotates due to the motion of the connecting rod. Since the crank is fixed to the flywheel(spinning wheel), the flywheel rotates and stores inertia to aid the smooth operation of the mechanism.
Here, the input link is the crank (wheel) and the output link is the foot pedal. This is chosen because the motion of the foot pedal varies a little in every cycle. This happens because the foot pedal pushes the rocker only using contact and not using any revolute joint. In a real-life situation, all inconsistencies can be avoided with the help of the stored inertia in the flywheel. The rocking motion of the floor pedal thus helps the spinning wheel rotate.
Additionally, a force of 400N in the downward direction is given to the free end of the foot pedal to mimic the foot force.

3 Simulation of Original Mechanism in Software

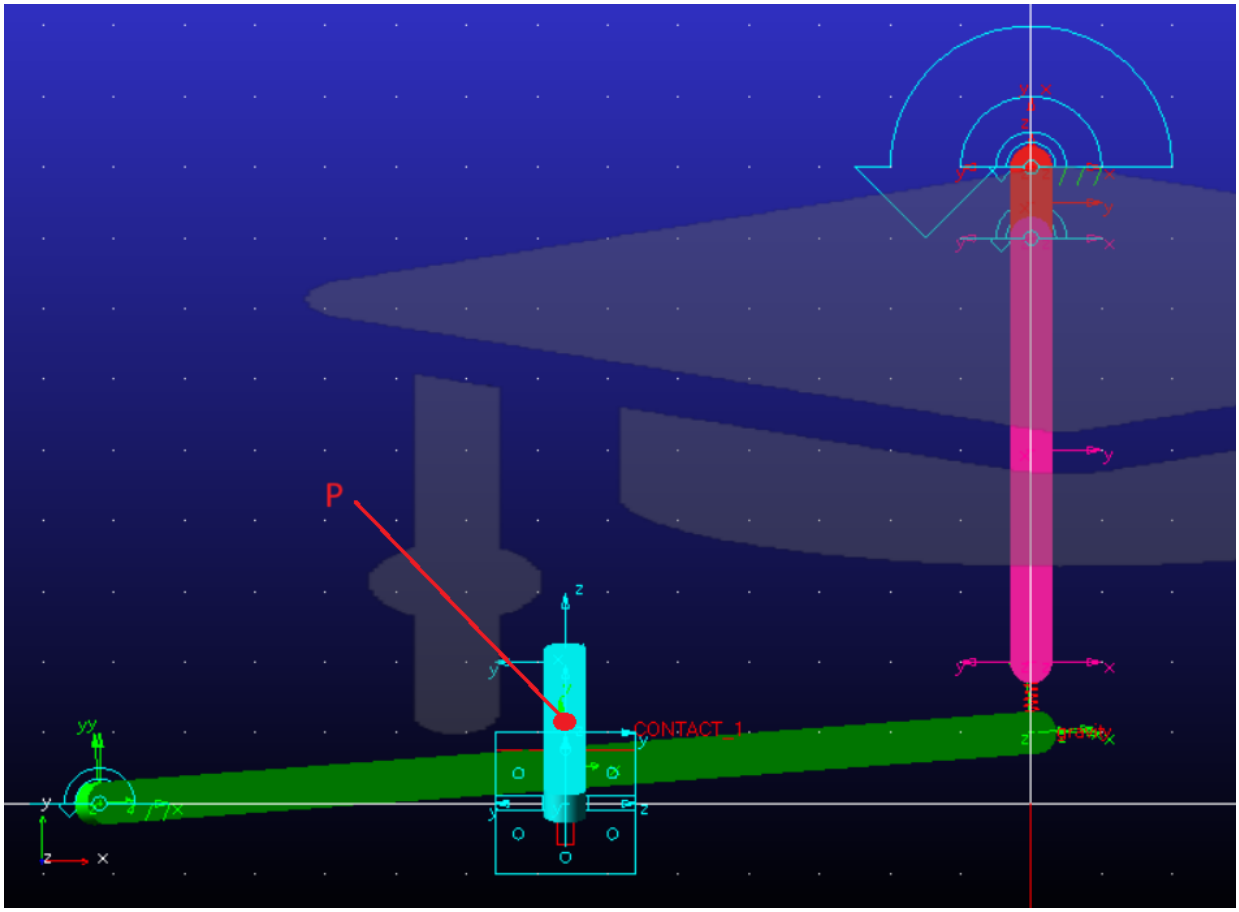

Figure 4: Front view of mechanism in ADAMS

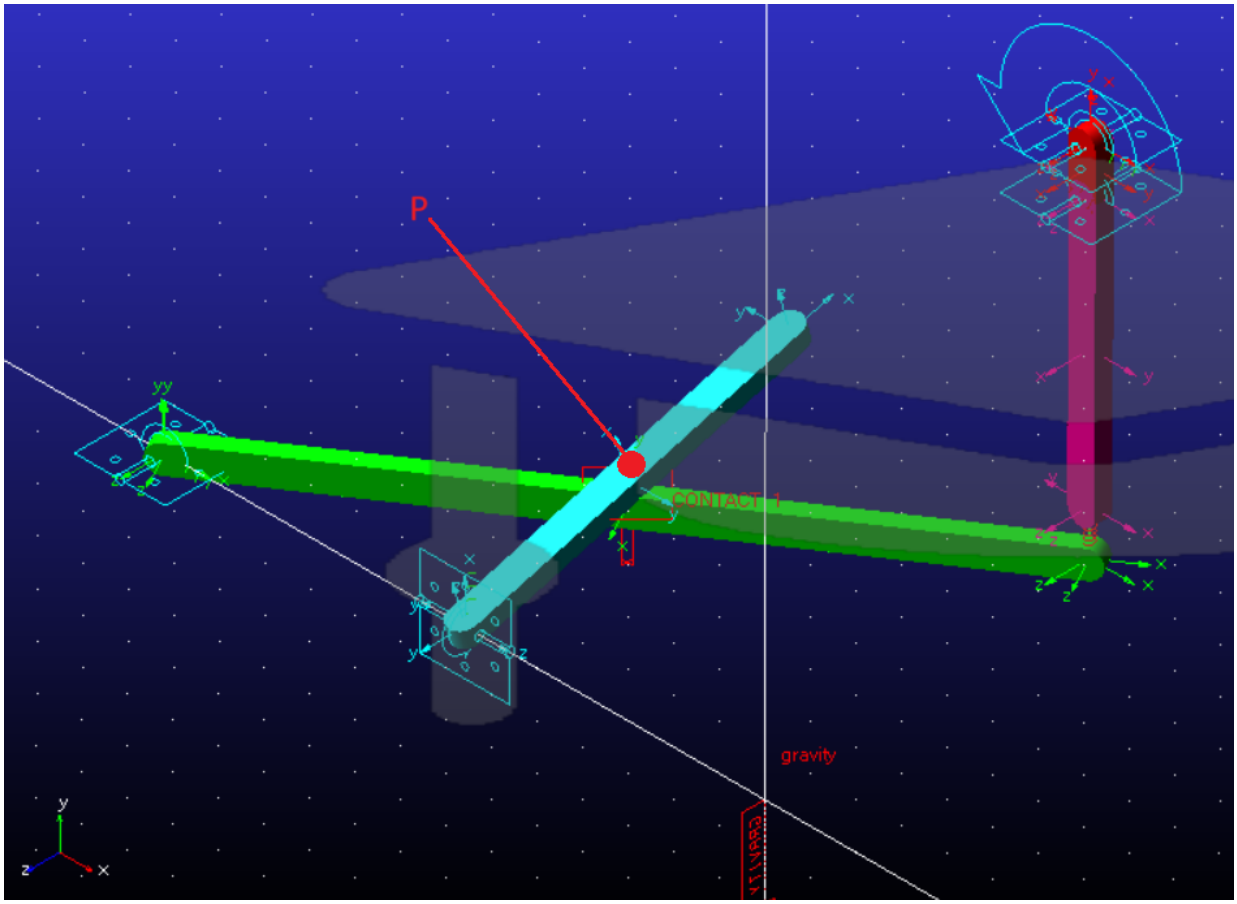

Figure 5: Isometric view of mechanism in ADAMS

A point P is chosen on the output component (foot pedal) as shown. P is the center of mass of the foot pedal.
Note: For the ADAMS model, the connecting rod is connected to the rocker using a spring. This is used for simplifying the model.

4 Kinematic Analysis of Original Mechanism: Simulation in Software

The foot pedal moves in the YZ plane. Therefore, to plot the movement in the XY plane, the mechanism is rotated by 90 degrees so that the point P moves in the XY plane.

4.0.1 Displacement

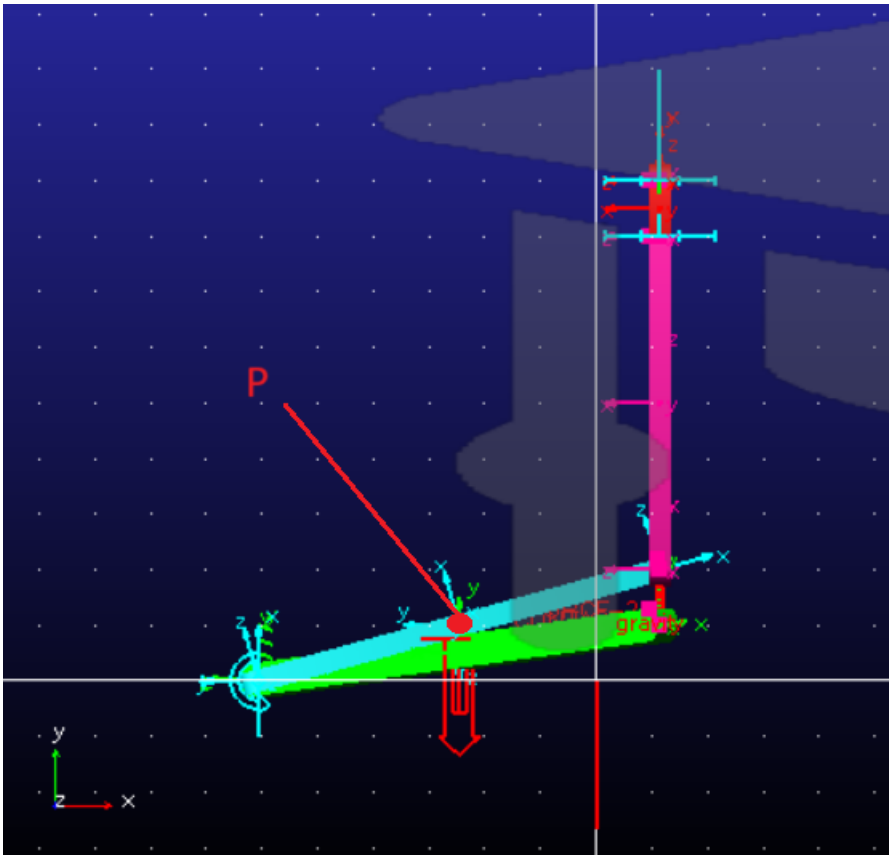

Figure 6: Front view of rotated mechanism

4.1 Displacement Plots

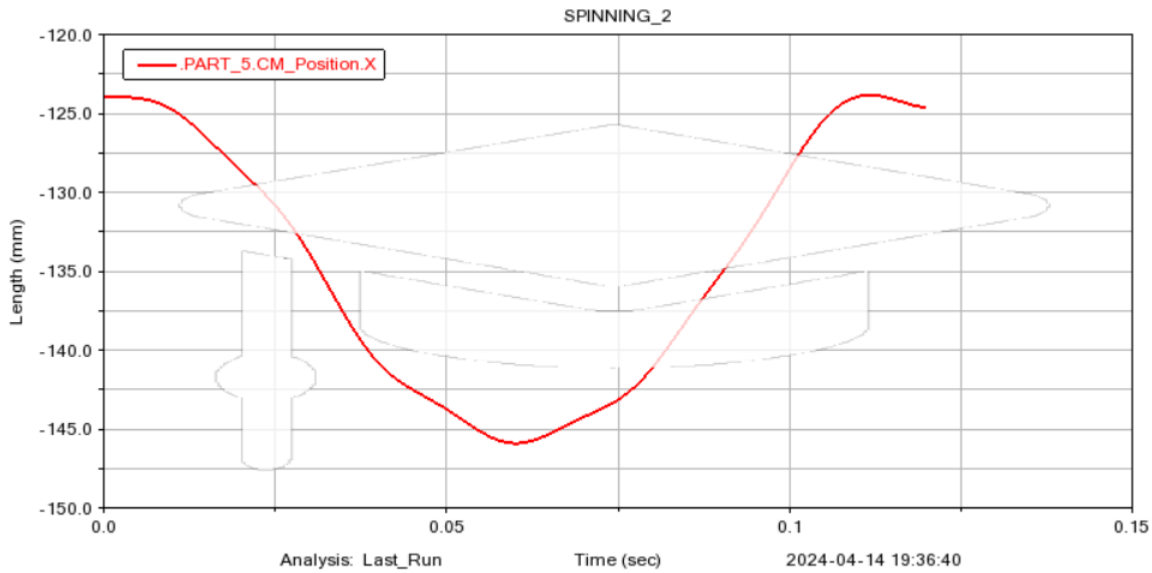

Figure 7: X displacement vs Time

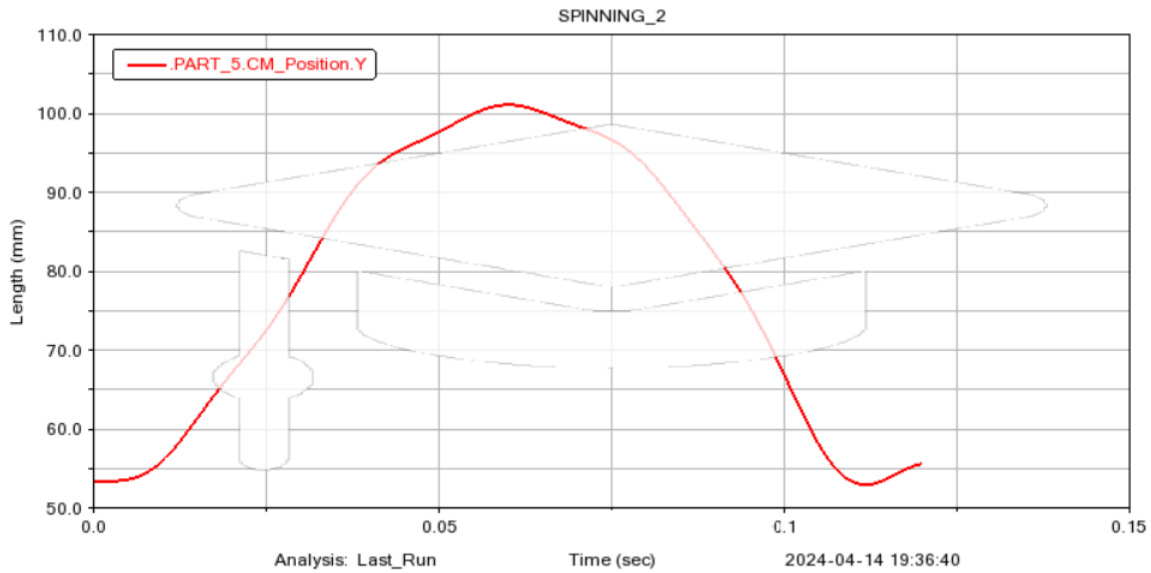

Figure 8: Y displacement vs Time

4.1.1 Trace

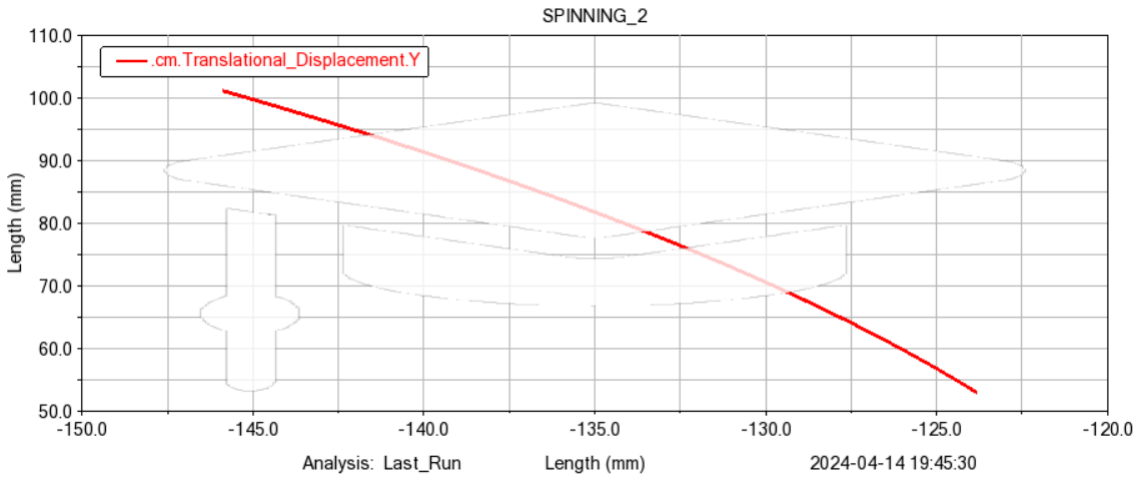

Figure 9: Trace(Y displacement vs X displacement)

The curve does not appear like a loop because the forward(upward) path traces the backward(downward) path properly.

4.2 Velocity

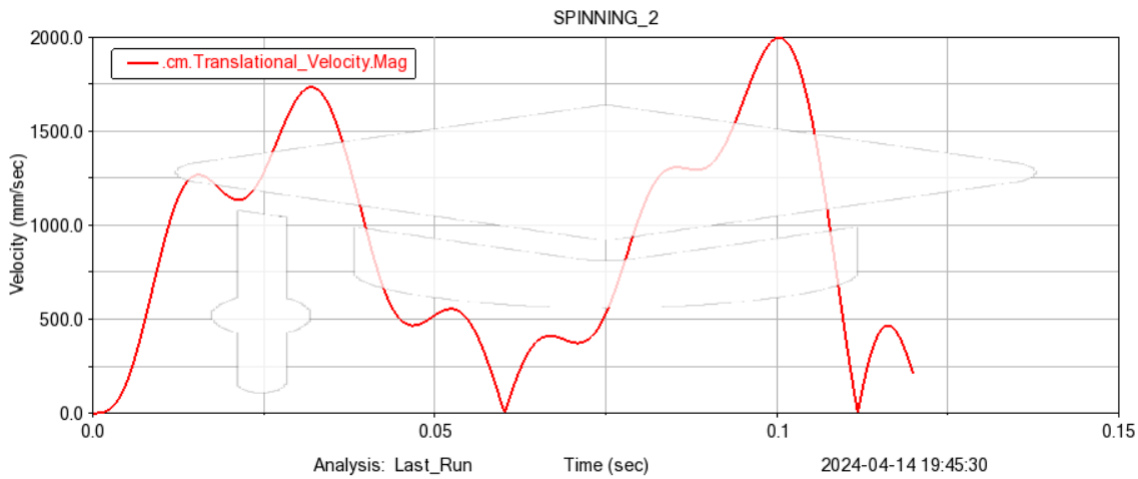

Figure 10: Velocity vs Time

4.3 Acceleration

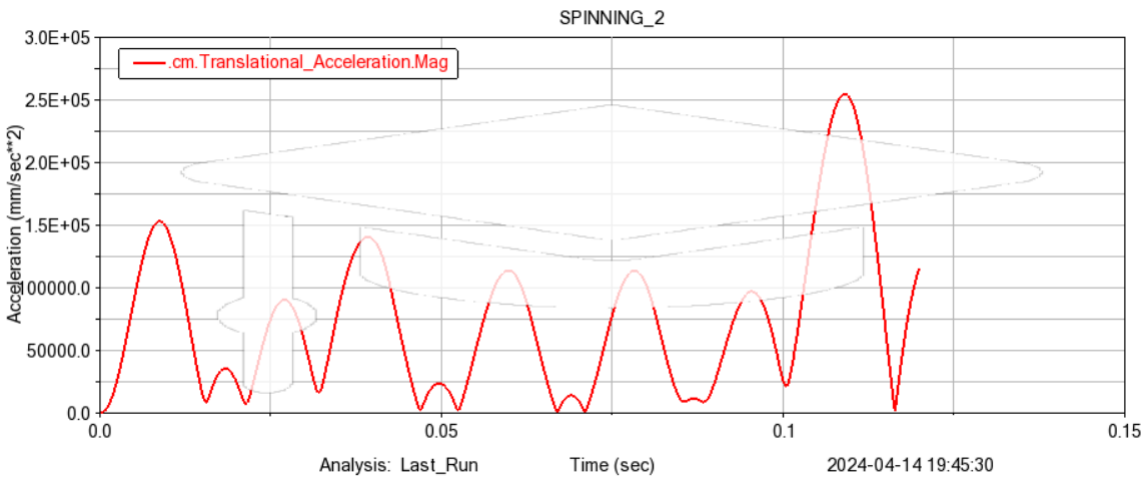

Figure 11: Acceleration vs Time

4.4 Comment

As mentioned in section 4.1.1, the trace of the center of mass of the foot pedal (point P) is obtained as expected. However, in the velocity plot, there are some fluctuations in the curve. In the acceleration curve, there are lots of fluctuations. These fluctuations are due to vibrations in the mechanism. The main cause of vibrations is the presence of the string (in this case, the spring) joining the rocker and the connecting rod. This is due to the presence of linkages in non-perpendicular planes. To improve this mechanism, the linkages can be designed to fit in planar or perpendicular planes and the motion transfer in perpendicular planes can be done with the help of bevel gears.

5 Dynamic Analysis of Original Mechanism: Simulation in Software

5.1 Total Mass

The total mass of the mechanism is 7.348 kg.

5.2 Torque/Force

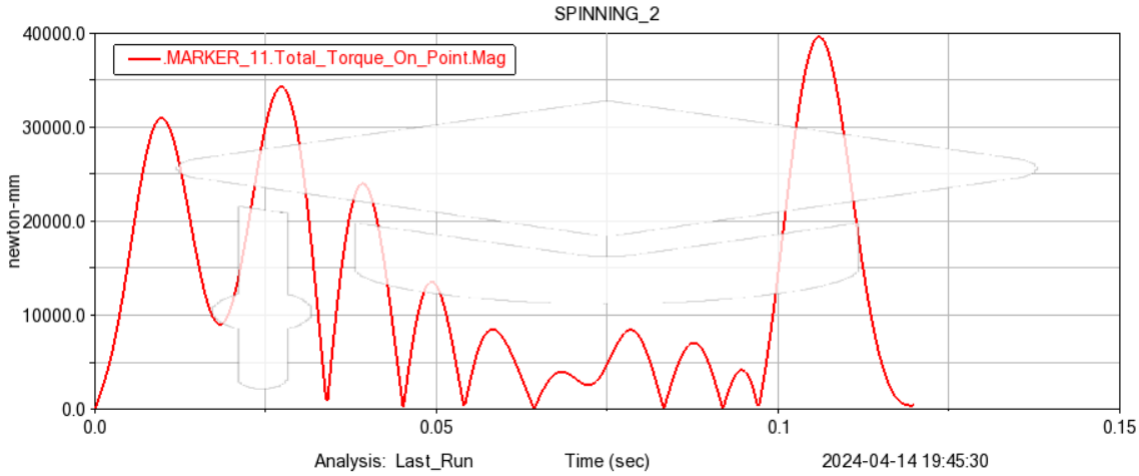

Figure 12: Torque vs Time

The average torque was found to be 12.673 Nm.

5.3 Power

Multiplying average torque with angular velocity 500 rpm (52.36 rad/s), we get average power, $P_{avg} = 663.545$ W.
Also, the maximum and minimum values of torque were 39.617 Nm and 0.01 Nm. Therefore, the maximum and minimum values of power are 2074.35 W and 0.524 W respectively.
While the average power needed by the motor is about 663.545 W, the motor should be able to support a maximum power of 2074.35 W.

6 Alternate Linkage

A 4-bar crank rocker mechanism can be used as an alternate treadle mechanism. The issue with this mechanism is that the foot pedal (rocker) and crank (spinning wheel) are in the same plane. But they should be in perpendicular planes. However, this can be easily resolved by using bevel gears to convert circular motion in YZ plane of crank to circular motion in XY plane of the spinning wheel.
In this project, for the alternate closed-loop kinematic chain mechanism, bevel gears are not used. Hence, both the crank (spinning wheel) and foot pedal (rocker) are in the XY plane.
Hence the 4 links are:

1. Rocker: Foot pedal (Output)
2. Connecting rod
3. Crank: Spinning wheel (input)

4. Fixed link: Frame of the machine

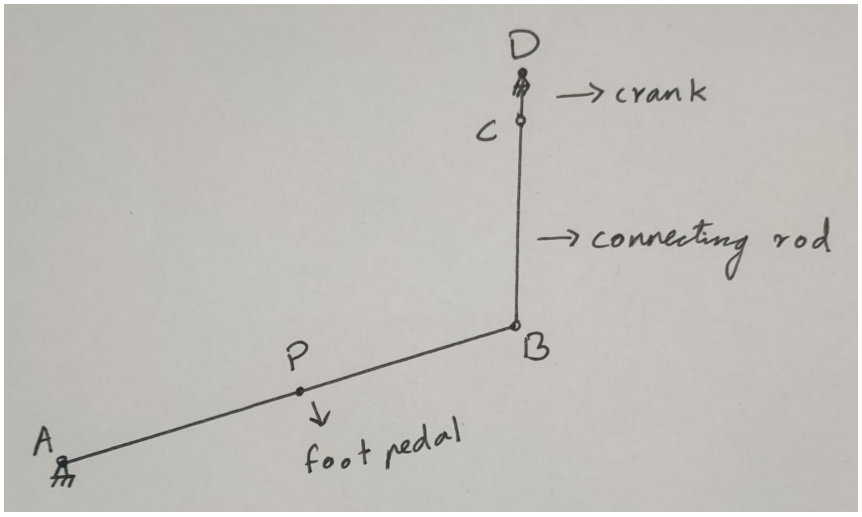

Figure 13: Alternate linkage

7 Kinematic Analysis of Alternate Linkage: Manual Calculation

Here, the foot pedal is the output component. The center of mass of the foot pedal (rocker) is chosen as point P for output analysis.

7.1 Velocity Analysis

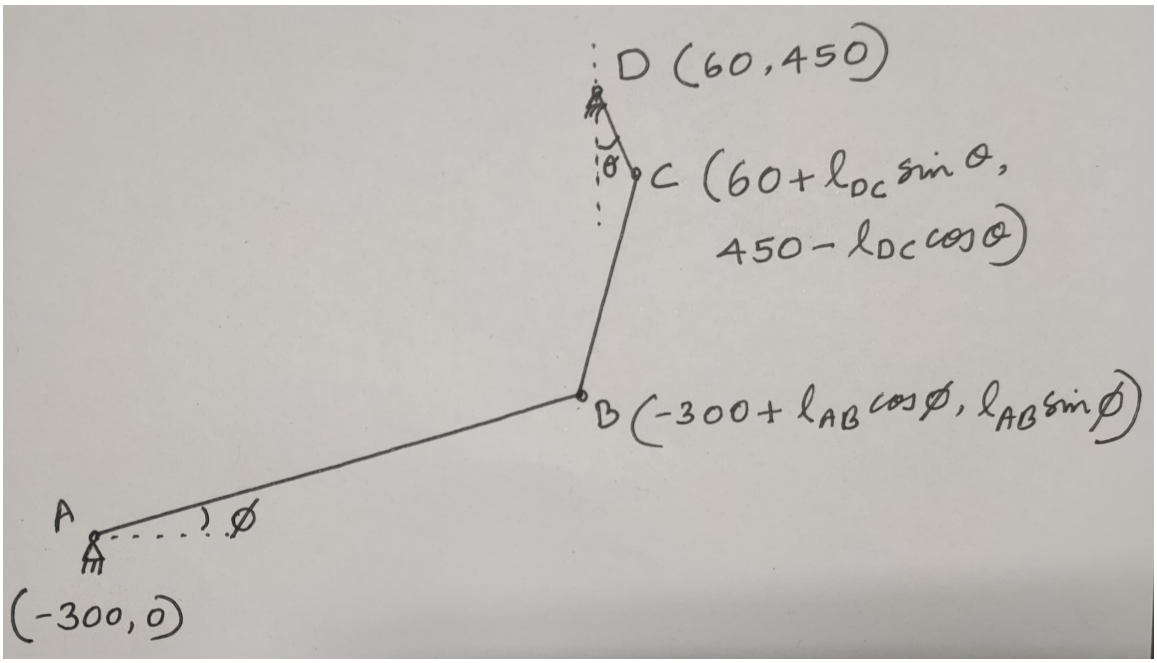

Figure 14: Alternate linkage

The input link rotates by θ and the output link rotates by ϕ. We know that length of BC is constant. Therefore, we have:

$$(360 + l_{DC}\sin\theta - l_{AB}\cos\phi)^2 + (450 - l_{DC}\cos\theta - l_{AB}\sin\phi)^2 = l_{BC}^2$$

$$\Rightarrow A\cos\phi + B\sin\phi = C$$

where $A = 2l_{AB}(360 + l_{DC}\sin\theta)$

$B = 2l_{AB}(450 - l_{DC}\cos\theta)$

$C = (360 + l_{DC}\sin\theta)^2 + (450 - l_{DC}\cos\theta)^2 + l_{AB}^2 - l_{BC}^2$

$$\Rightarrow \sqrt{A^2+B^2}\cos(\phi - \alpha) = C$$

where $\alpha = \tan^{-1}\left(\frac{B}{A}\right)$

$$\Rightarrow \phi = \tan^{-1}\left(\frac{B}{A}\right) + \cos^{-1}\left(\frac{C}{\sqrt{A^2+B^2}}\right)$$

where A, B and C are functions of θ

Once ϕ is known, the coordinates of point P can be computed. Differentiating the X and Y coordinates of point P with respect to t will give the velocity of point P in X and Y directions. Squaring the 2 velocity components, adding and taking their square roots gives the speed at point P.

7.2 Acceleration Analysis

Similarly, differentiating the X and Y components of velocities of point P with respect to t will give the acceleration of point P in X and Y directions. Squaring the 2 acceleration components, adding and taking their square roots gives the absolute acceleration at point P.

8 Kinematic Analysis of Alternate Linkage: Simulation in Software

8.1 Modeling the alternate mechanism

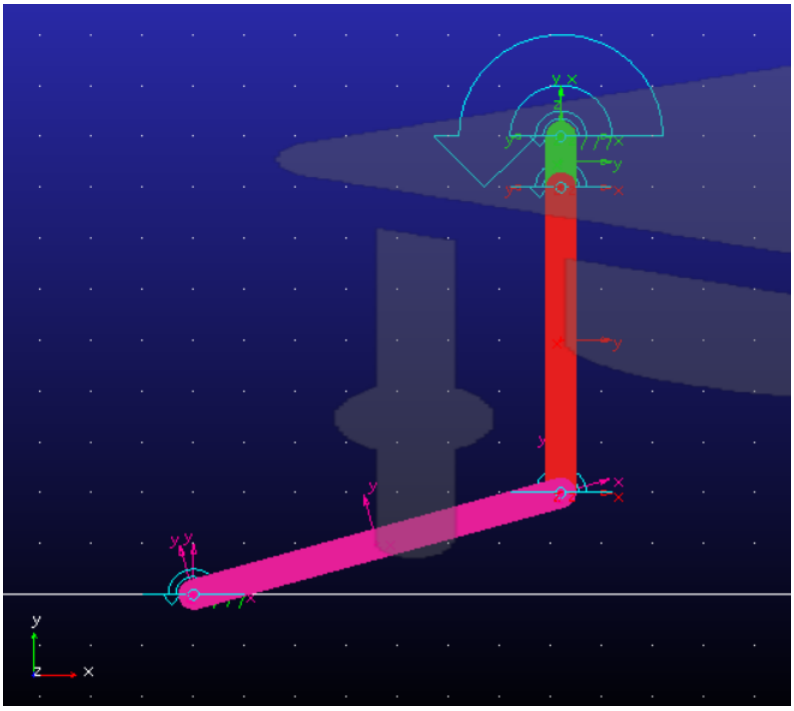

Figure 15: Front view of alternate mechanism

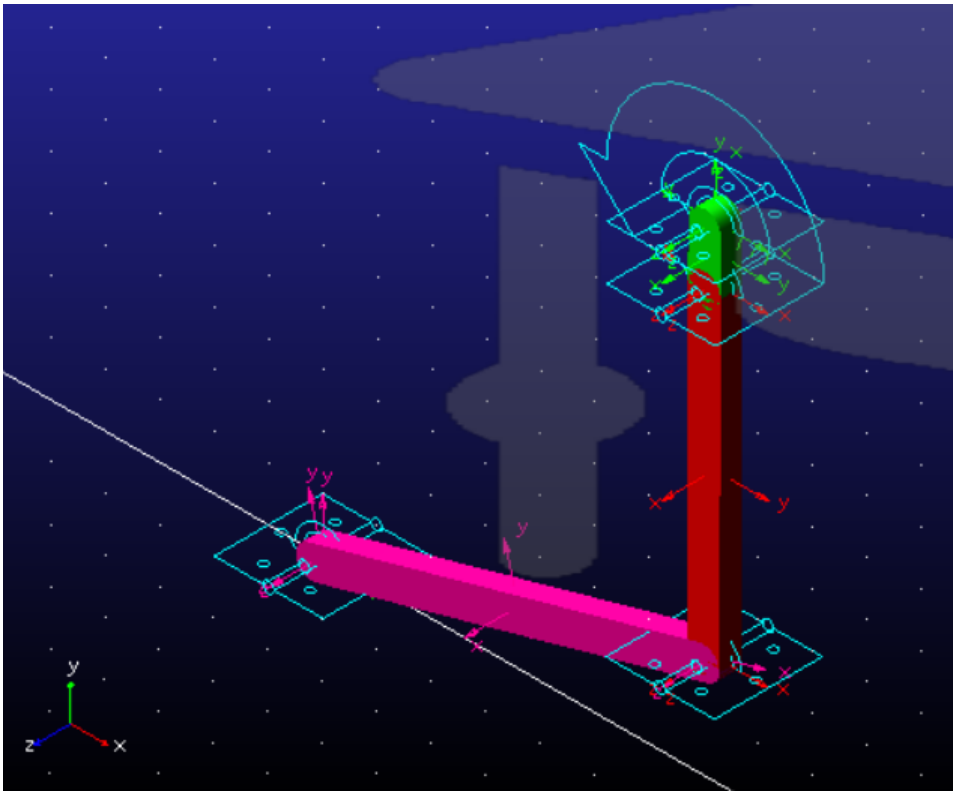

Figure 16: Isometric view of alternate mechanism

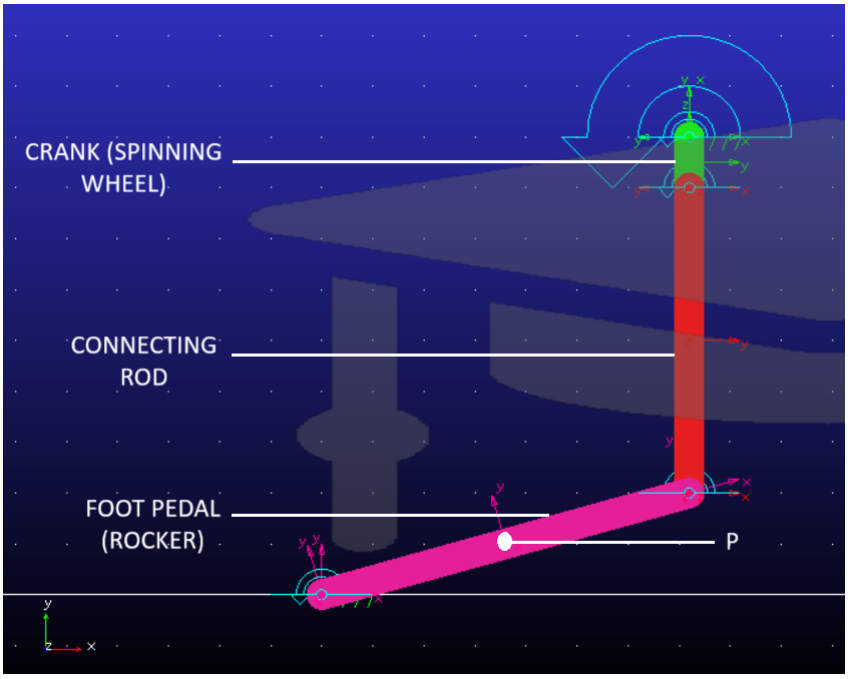

Figure 17: Location of point P

8.2 Displacement

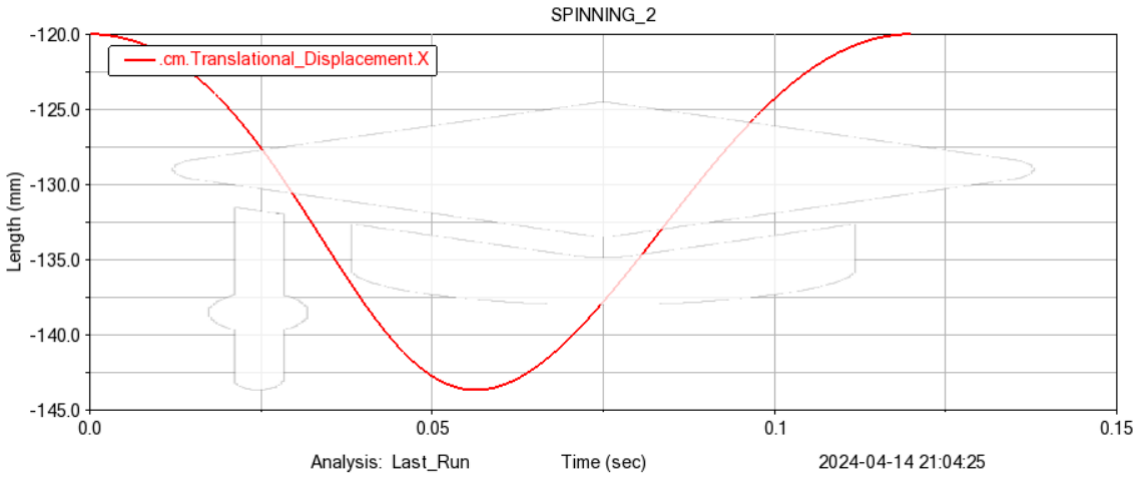

Figure 18: X displacement vs Time: Alternate mechanism

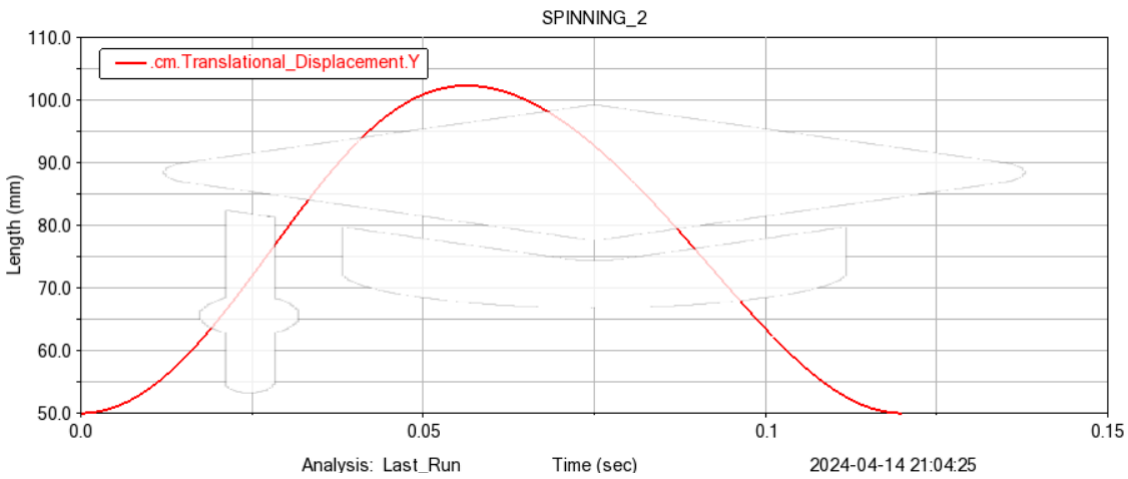

Figure 19: Y displacement vs Time: Alternate mechanism

8.3 Trace

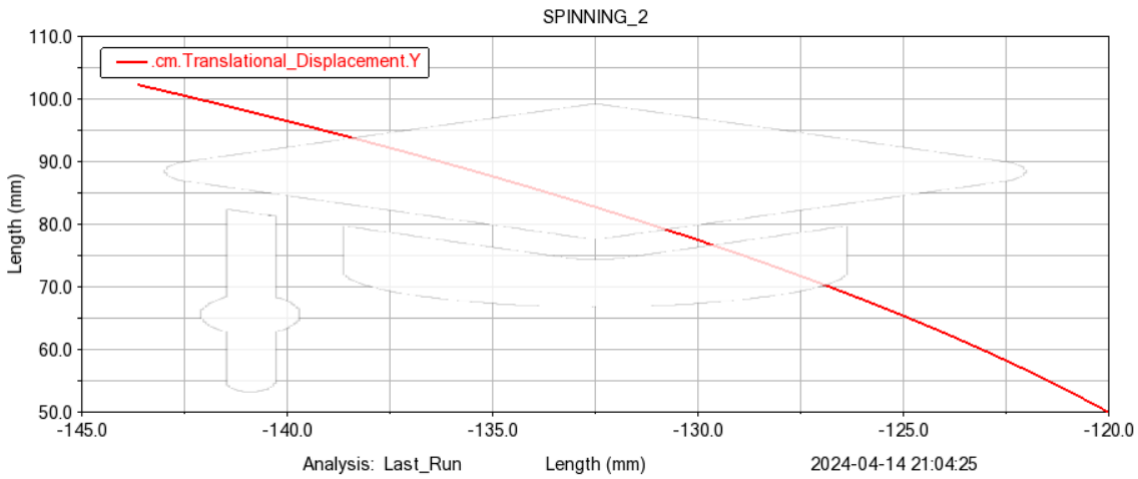

Figure 20: Trace of point P of alternate mechanism

9 Dynamic Analysis of Alternate Linkage: Simulation in Software

9.1 Total Mass

The total mass of the mechanism is 3.712 kg.

9.2 Torque/Force

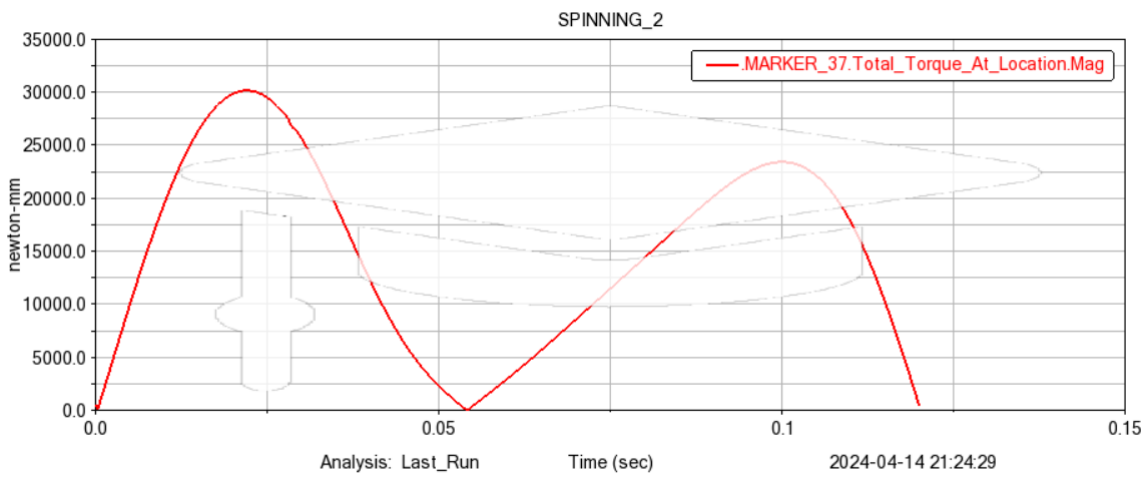

Figure 21: Torque vs Time

The average torque was found to be 14.991 Nm.

9.3 Power

Multiplying average torque with angular velocity 500 rpm (52.36 rad/s), we get average power, $P_{avg} = 784.93$ W.
Also, the maximum and minimum values of torque were 30.158 Nm and 0.048 Nm. Therefore,

the maximum and minimum values of power are 1579.07 W and 2.51 W respectively.
While the average power needed by the motor is about 784.93 W, the motor should be able to support a maximum power of 1579.07 W.

10 Comparison of Original and Alternate Mechanism

10.1 Displacement Comparison

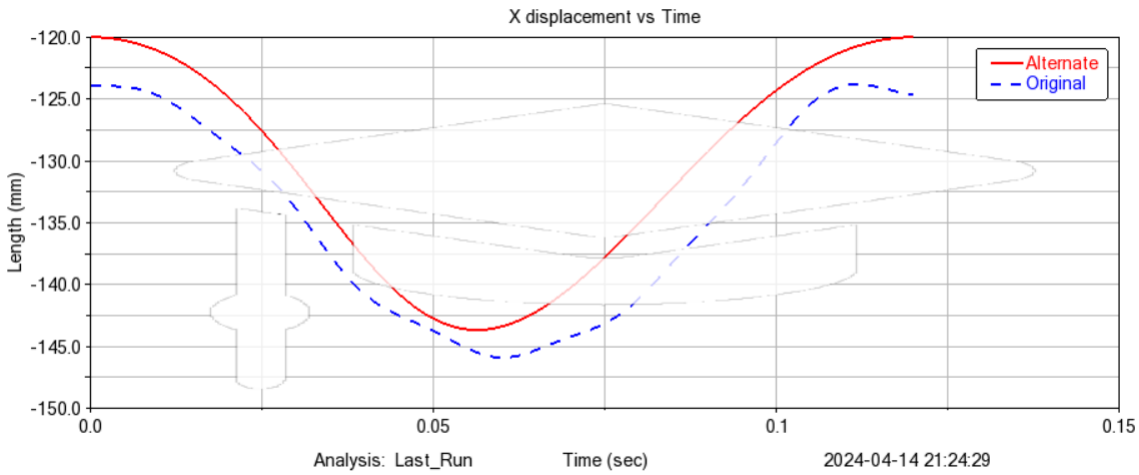

Figure 22: Superimposed plot: X displacement vs Time

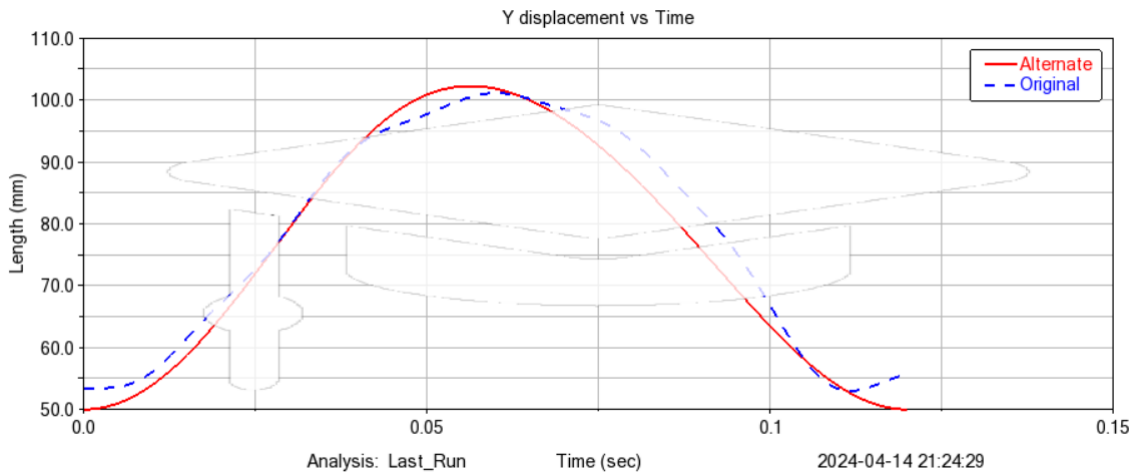

Figure 23: Superimposed plot: Y displacement vs Time

10.2 Trace Comparison

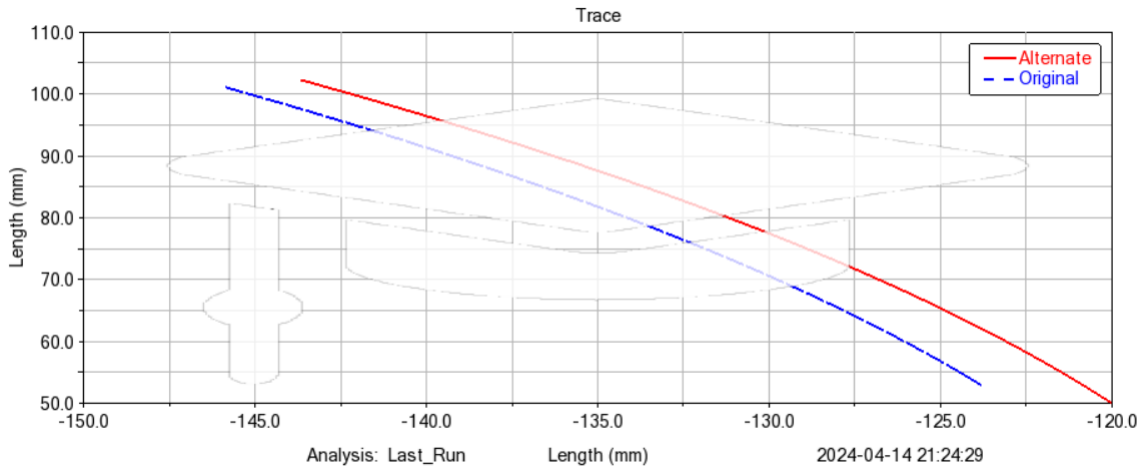

Figure 24: Superimposed plot: Trace(Y displacement vs X displacement)

10.3 Torque/Force Comparison

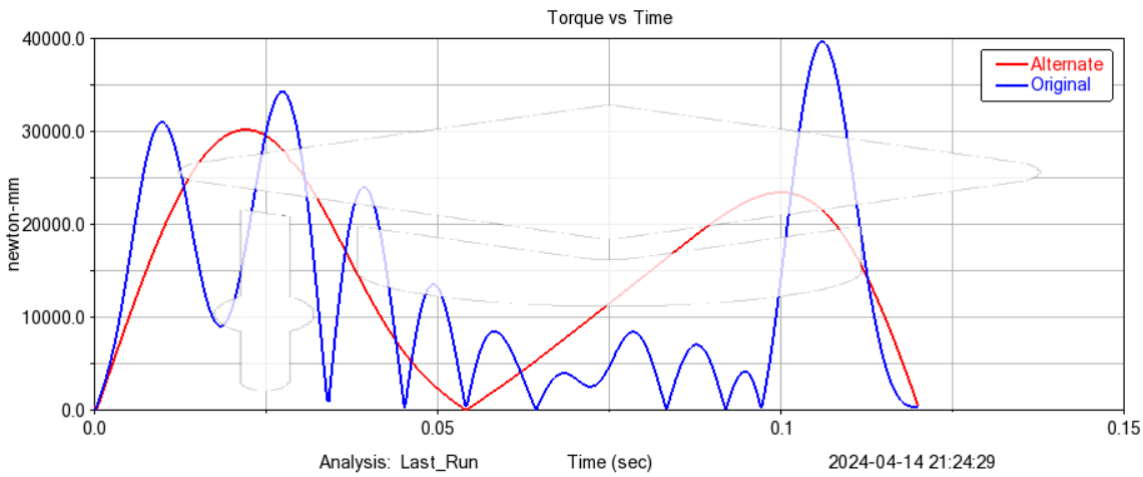

Figure 25: Superimposed plot: Torque vs Time

10.4 Power Comparison

For the original mechanism, the average power is 663.545 W and the power ranges from 0.524W to 2074.35 W. For the alternate mechanism, the average power is 784.93 W and the power ranges from 2.51 W to 1579.07 W.
The average power is higher for the alternate mechanism. Therefore, the person driving the pedals will expend more energy on the alternate mechanism than the original mechanism. However, the maximum power required is more for the original one. Also, there are more fluctuations in power for the original mechanism. Therefore, the original mechanism is not good for the machine's health. There will be more wear and tear in the case of original mechanism.

11 Comments

11.1 Error Analysis

The displacement plots generally follow the same shape. But the plots for the alternate mechanism are smooth and the plots for the original mechanism are rough.
The reason for the rough curves in the original mechanism can be attributed to the presence of the string (in this case, the spring) joining the rocker and the connecting rod. The string is not rigid in the downward stroke and can cause slacking which can lead to sudden jerks and vibrations in the machine as it operates at a very high speed.
The alternate mechanism is a closed loop kinematic chain and all joints are revolute joints. Therefore there is very less vibrations in this case and the curves are smoother.

11.2 Index of Merit

The alternate mechanism is better at doing the task as it has less vibrations and thus smooth operation. The issue with the alternate mechanism is that bevel gears would be needed to place the wheel in the plane perpendicular to the foot pedal. This configuration saves space and makes the spinning process more comfortable. Even if more wear and tear is expected for the original mechanism, it is easy to repair. Gears should be replaced once broken and is not ideal for a home setting where traditional looms are used.
Also as mentioned earlier, the person driving the pedals will expend more energy on the alternate mechanism than the original mechanism.
Hence the original mechanism is better from the user's perspective (comfort, easy to repair) while the alternate mechanism produces the best results.

References

[1] Shuttles and Needles. *Ashford Traditional Spinning Wheel Single Drive*. URL: `https://shuttlesandneedles.com/cdn/shop/products/ScreenShot2020-06-18at2.25.16PM_1200x1200.png?v=1592470562`.

[2] Halcyon Yarn. *How to choose a spinning wheel*. URL: `https://halcyonyarn.com/news/wp-content/uploads/2016/02/spinning-wheel-parts-diagram-overview.jpg`.