Sulzer-torsion picking mechanism

ME754 - Textile Machines Design & Automation

Amal Thomas

Table of Contents

1 Existing Mechanism **3**
1.1 Images . . . 3
1.2 Description . . . 4

2 Kinematic Sketch **4**

3 Simulation of Original Mechanism in Software **5**

4 Kinematic Analysis of Original Mechanism: Simulation in Software **6**
4.1 Displacement Plots . . . 6
4.1.1 Displacement . . . 6
4.1.2 Trace . . . 7
4.2 Velocity . . . 7
4.3 Acceleration . . . 8
4.4 Comment . . . 8

5 Dynamic Analysis of Original Mechanism: Simulation in Software **8**
5.1 Total Mass . . . 8
5.2 Torque/Force . . . 9
5.3 Power . . . 9

6 Alternate Linkage **9**

7 Kinematic Analysis of Alternate Linkage: Manual Calculation **10**
7.1 Velocity Analysis . . . 10
7.2 Acceleration Analysis . . . 10

8 Kinematic Analysis of Alternate Linkage: Simulation in Software **11**
8.1 Modeling the alternate mechanism . . . 11
8.2 Displacement . . . 12
8.3 Trace . . . 13

9 Dynamic Analysis of Alternate Linkage: Simulation in Software **13**
9.1 Total Mass . . . 13
9.2 Torque/Force . . . 13
9.3 Power . . . 13

10 Comparison of Original and Alternate Mechanism **14**
10.1 Displacement Comparison . . . 14
10.2 Trace Comparison . . . 15
10.3 Torque/Force Comparison . . . 15
10.4 Power Comparison . . . 15

11 Comments **16**
11.1 Error Analysis 16
11.2 Index of Merit 16

References **16**

1 Existing Mechanism

The Sulzer-torsion picking mechanism is chosen for this project.

1.1 Images

Figure 1: Sulzer-torsion picking mechanism[1]

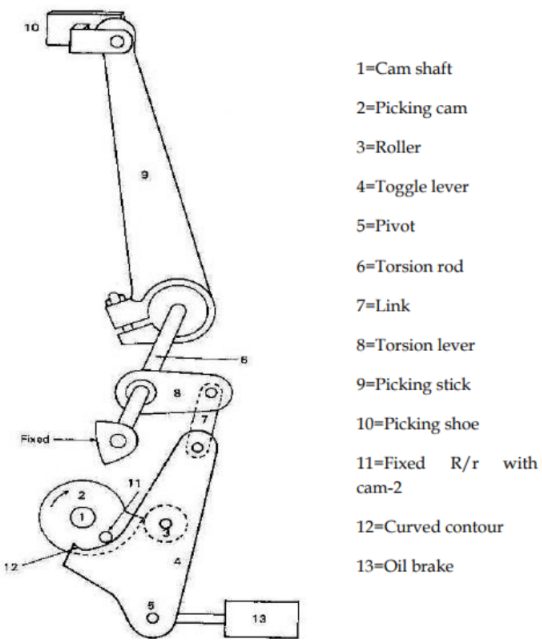

Figure 2: Parts in Sulzer-torsion picking mechanism[2]

1.2 Description

Picking is the process of weft yarn insertion in the warp shed. It is the second primary motion in weaving. There are many types of picking mechanisms. Here, shuttle picking is considered. A shuttle is a tool designed to neatly and compactly store a holder that carries the thread of the weft yarn while weaving with a loom. The primary objective of shuttle picking is to throw the shuttle at a pre-determined speed. The picking mechanism delivers the shuttle from one end of the fabric to the other end. This results in the insertion of the weft yarn through the shed.
Conventional shuttle looms can operate at speeds of about 150 picks per minute. Since 2 picks are working alternatively, the speed for a single picking mechanism is taken as 75 picks per minute i.e., 75 rpm.

2 Kinematic Sketch

The below figure shows a simplified sketch of a picking mechanism.

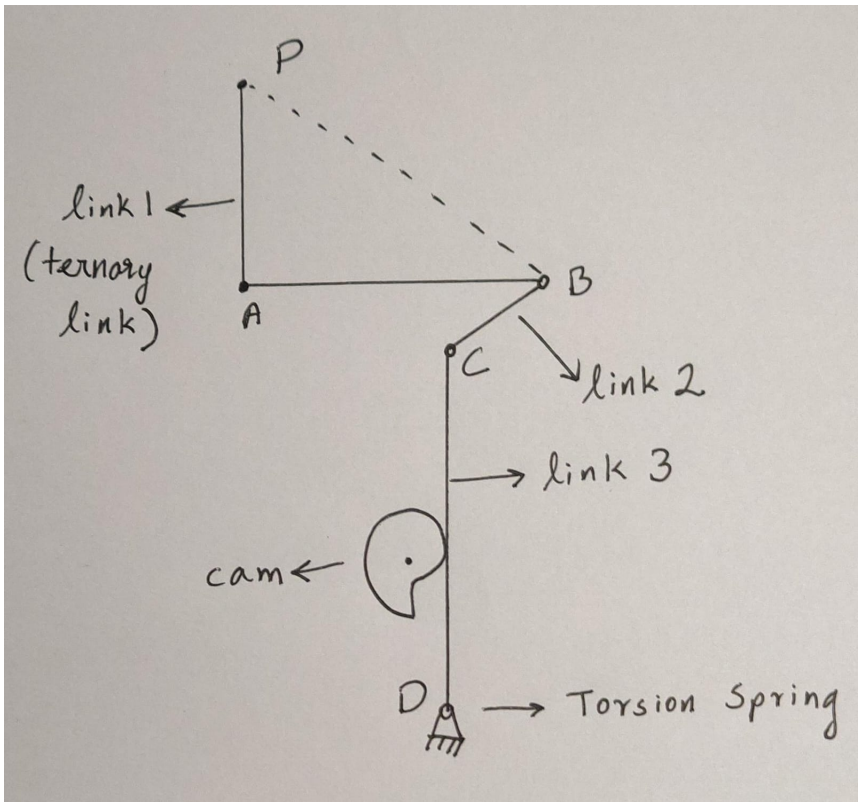

Figure 3: Kinematic sketch

The cam and all the linkages lie on the same plane. As the cam rotates, link 3 is pushed towards the right. One end of link 3 is connected to a torsion spring which stores the potential energy when link 3 is pushed towards the right. As the cam rotates, link 3 suddenly loses contact with the part of the cam with the largest radius and immediately comes back to its initial position with the help of the potential energy stored in the torsion spring.
Link 3 is connected to link 2 at point C and link 2 is connected to the L-shaped link 1 at point B. Link 1 is a ternary linkage and is pivoted at point A to the machine frame(fixed linkage).
The shuttle comes in contact with link 1 at point P. Therefore this point is chosen as the output for further analysis. The rotating cam is the input.

3 Simulation of Original Mechanism in Software

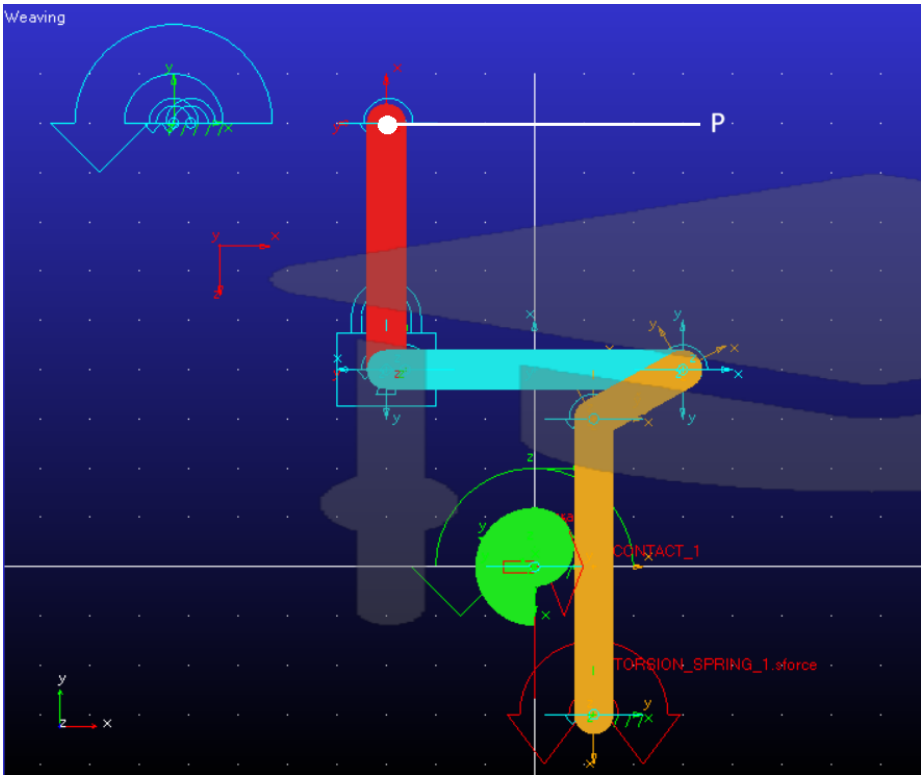

Figure 4: Front view of mechanism in ADAMS

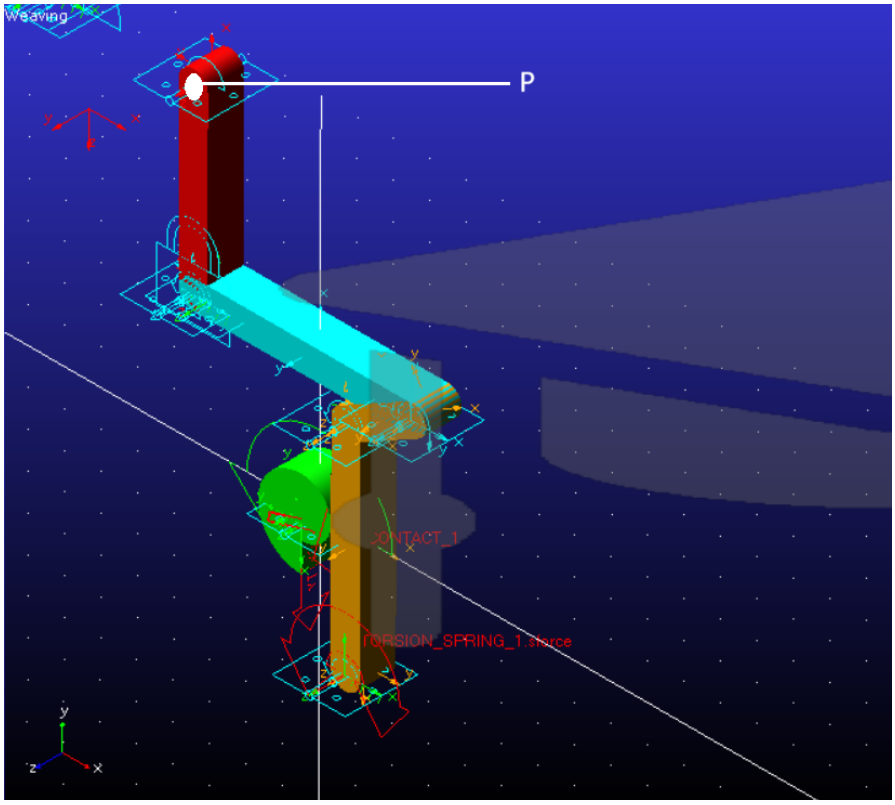

Figure 5: Isometric view of mechanism in ADAMS

A point P is chosen on the output component (link 1) as shown

4 Kinematic Analysis of Original Mechanism: Simulation in Software

4.1 Displacement Plots

4.1.1 Displacement

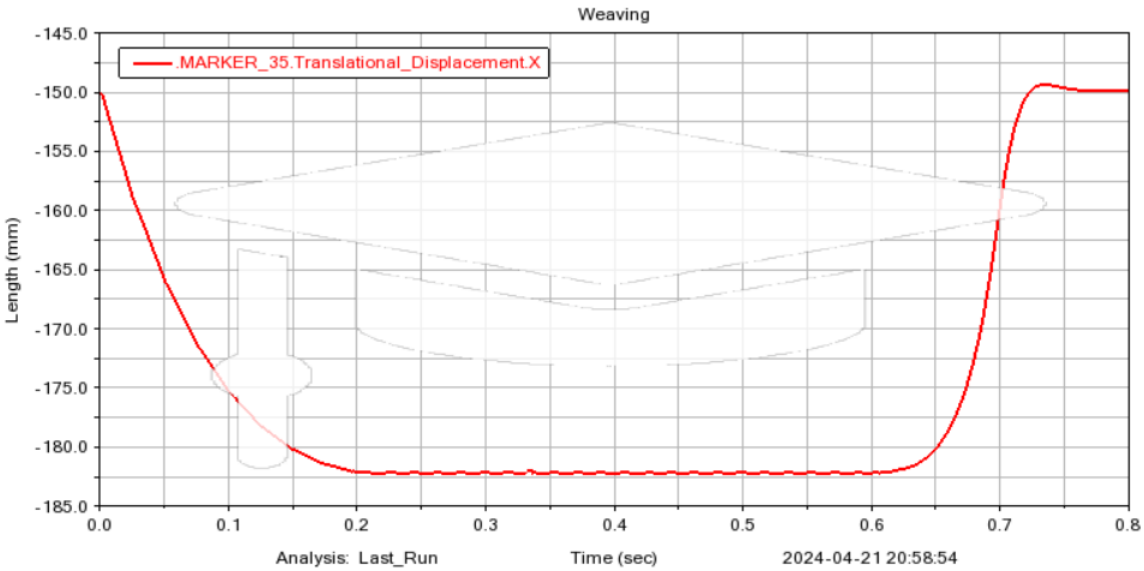

Figure 6: X displacement vs Time

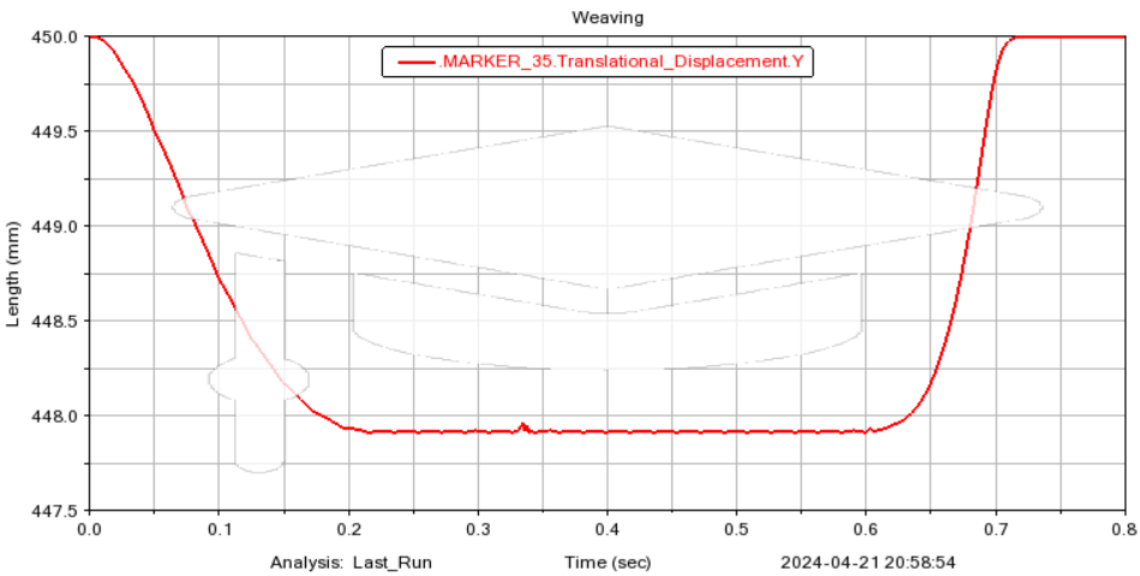

Figure 7: Y displacement vs Time

4.1.2 Trace

Figure 8: Trace(Y displacement vs X displacement)

The curve does not appear like a loop because the forward(upward) path traces the backward(downward) path properly.

4.2 Velocity

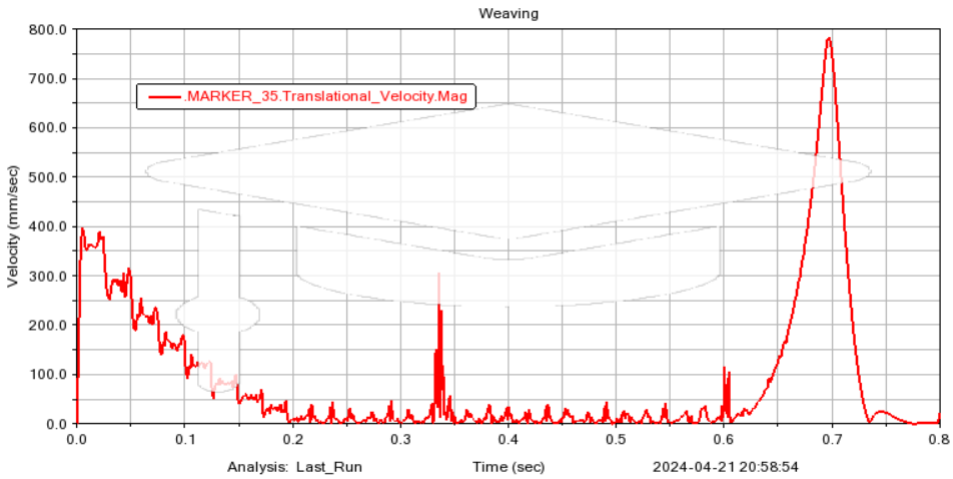

Figure 9: Velocity vs Time

4.3 Acceleration

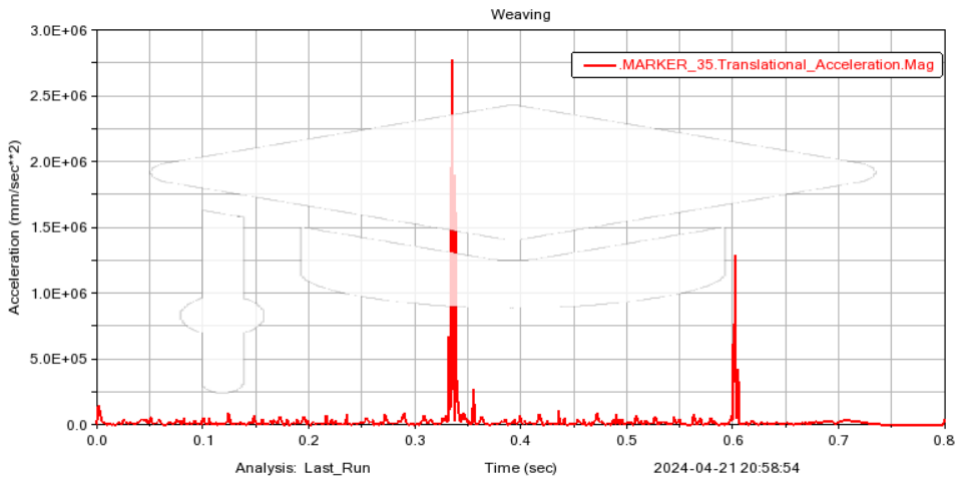

Figure 10: Acceleration vs Time

4.4 Comment

As indicated by the displacement plots, for the majority of the time in the cycle, the point P remains idle. The picking action is quick and the point P comes back to its idle position as soon the shuttle leaves point P. From the trace we can see that Y displacement is very low compared to the X displacement. This is similar to the expected motion of the shuttle. Also the velocity peaks at around time t = 0.7. This is around the time, the shuttle leaves the point P. Therefore the mechanism can impart high momentum to the shuttle. However, there are unexpected peaks in the acceleration plots. The vibrations in the acceleration plot can be due to the vibrations from the torsional spring.

5 Dynamic Analysis of Original Mechanism: Simulation in Software

5.1 Total Mass

The total mass of the mechanism is 19.982 kg.

5.2 Torque/Force

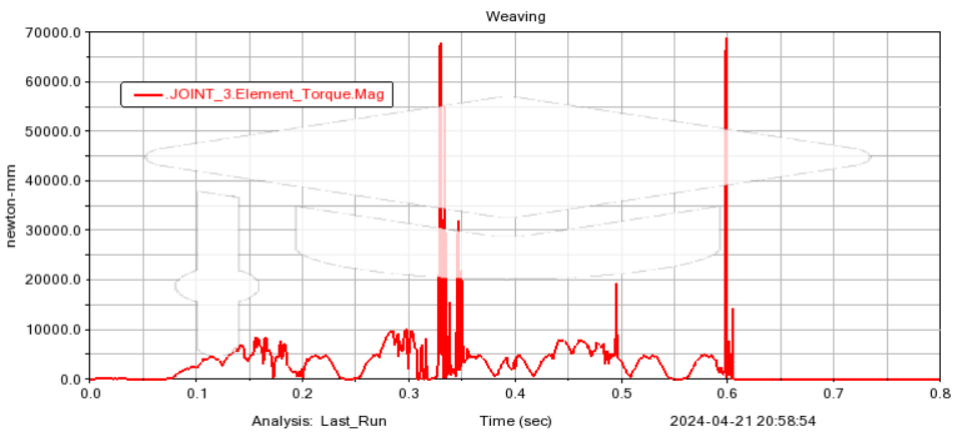

Figure 11: Torque vs Time

The average torque was found to be 3.143 Nm.

5.3 Power

Multiplying average torque with angular velocity 75 rpm (7.854 rad/s), we get average power, $P_{avg} = 24.688$ W.
Also, the maximum and minimum values of torque were 68.919 Nm and 0 Nm. Therefore, the maximum and minimum values of power are 541.29 W and 0 W respectively.
While the average power needed by the motor is about 24.688 W, the motor should be able to support a maximum power of 541.29 W.

6 Alternate Linkage

It is generally difficult to convert cam mechanisms to closed-loop kinematic chains. However, a crank rocker mechanism can be used as an alternative. The issue with this mechanism is that, it cannot stay idle for any duration and cannot achieve large output speed in a small amount of time. To solve this issue, instead of giving constant angular velocity to the crank a sinusoidal velocity can be given with the help of servo motors. But, for this project, constant angular speed of 75 rpm is used which is the same as that for the original mechanism.
Hence the 4 links are:

1. Rocker (Output) AB
2. Connecting rod BC
3. Crank (input) CD
4. Fixed link: Frame of the machine

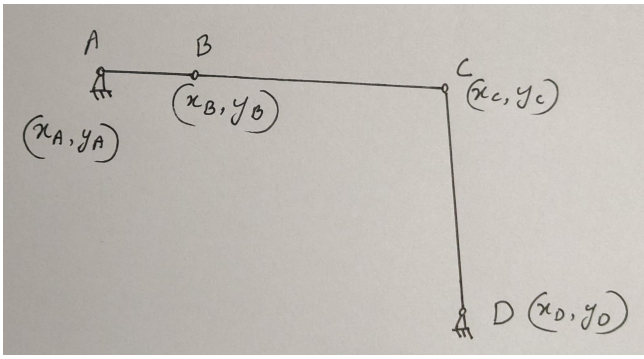

Figure 12: Alternate linkage

7 Kinematic Analysis of Alternate Linkage: Manual Calculation

7.1 Velocity Analysis

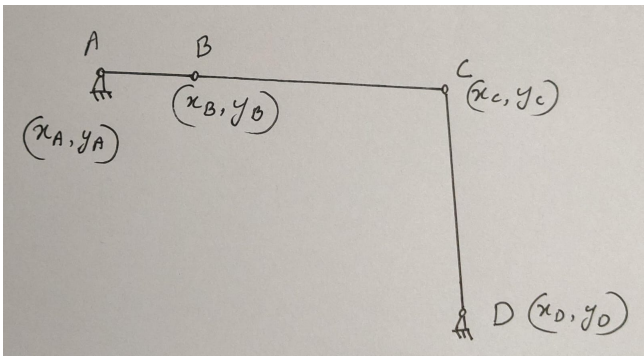

Figure 13: Alternate linkage

The input link AB rotates by θ and the output link CD rotates by ϕ. Coordinates of A and D are fixed. The coordinate of point B can be written in terms of coordinates of A and θ. Similarly, coordinates of C can be written in terms of coordinates of D and ϕ.
We know that the length of BC is constant. Applying the distance constraint, we obtain an equation in terms of coordinates of A, coordinates of D, θ and ϕ. That is, ϕ is a function of θ. Once ϕ is known, the coordinates of point P can be computed. Differentiating the X and Y coordinates of point P with respect to t will give the velocity of point P in X and Y directions. Squaring the 2 velocity components, adding and taking their square roots gives the speed at point P.

7.2 Acceleration Analysis

Similarly, differentiating the X and Y components of velocities of point P with respect to t will give the acceleration of point P in X and Y directions. Squaring the 2 acceleration components, adding and taking their square roots gives the absolute acceleration at point P.

8 Kinematic Analysis of Alternate Linkage: Simulation in Software

8.1 Modeling the alternate mechanism

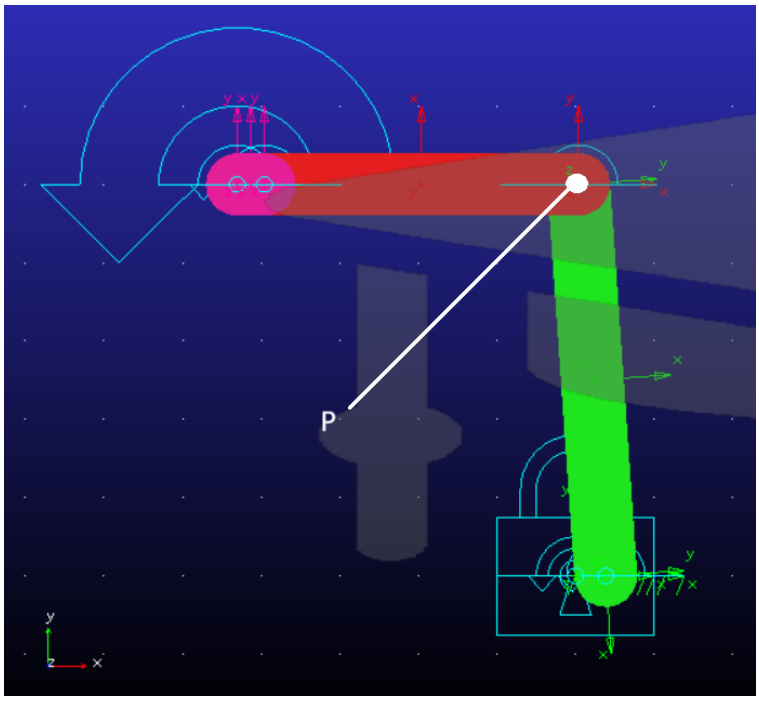

Figure 14: Front view of alternate mechanism

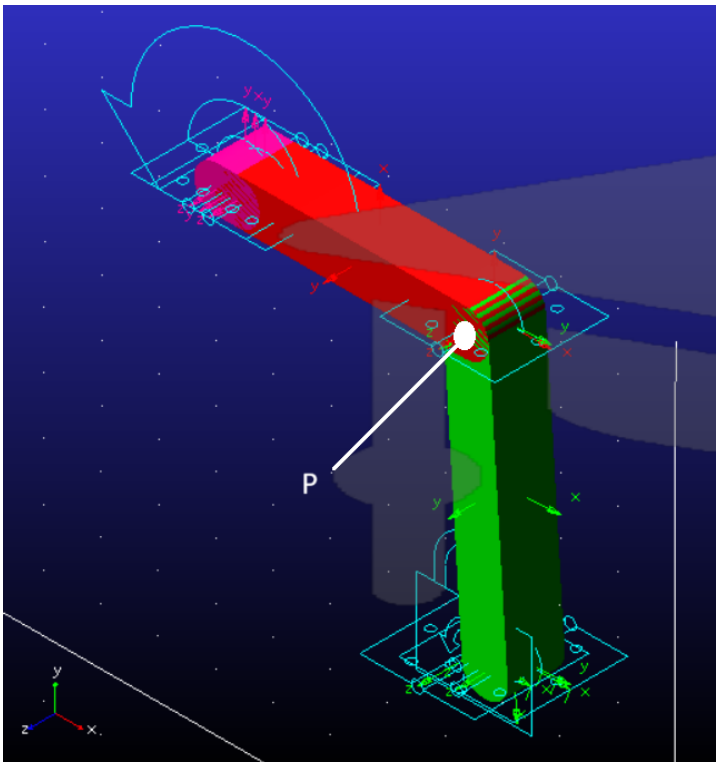

Figure 15: Isometric view of alternate mechanism

8.2 Displacement

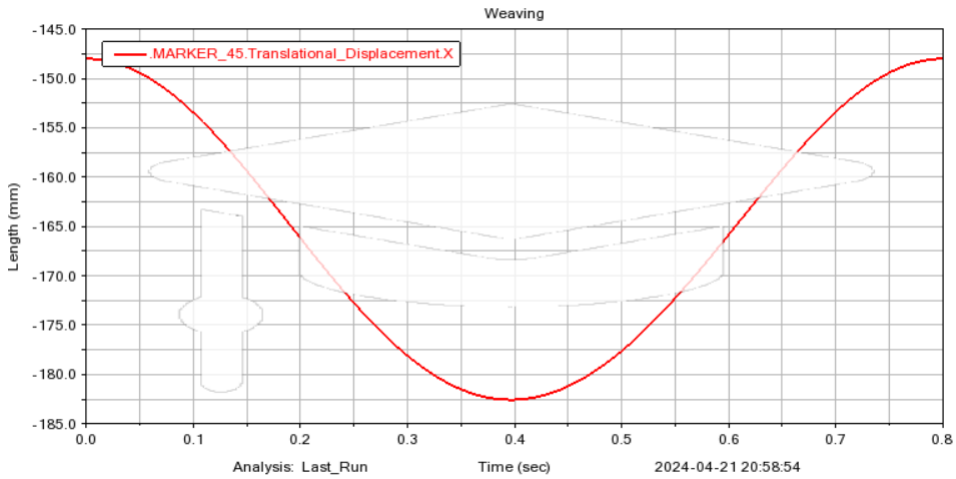

Figure 16: X displacement vs Time: Alternate mechanism

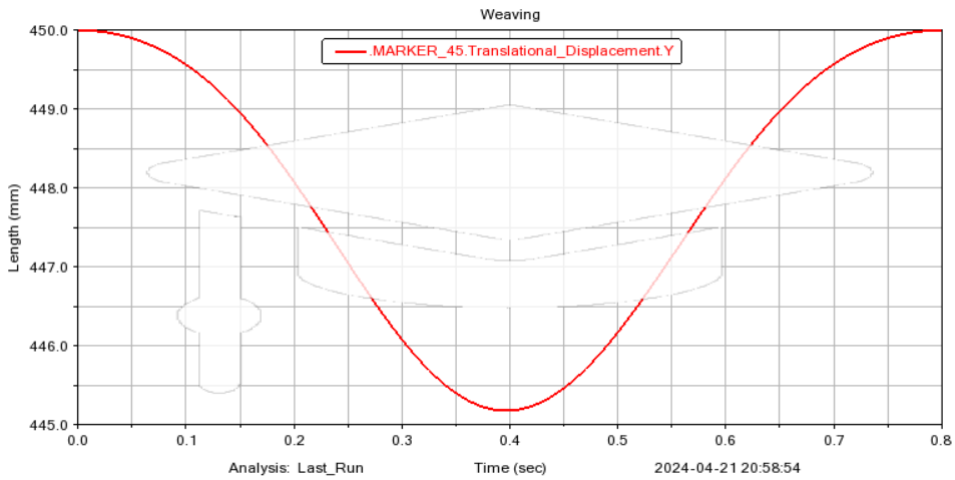

Figure 17: Y displacement vs Time: Alternate mechanism

8.3 Trace

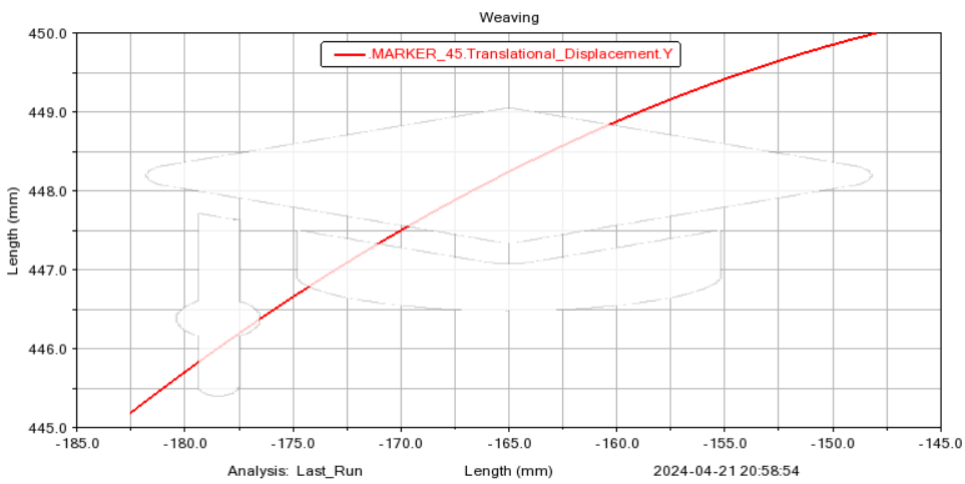

Figure 18: Trace of point P of alternate mechanism

9 Dynamic Analysis of Alternate Linkage: Simulation in Software

9.1 Total Mass

The total mass of the mechanism is 8.746 kg.

9.2 Torque/Force

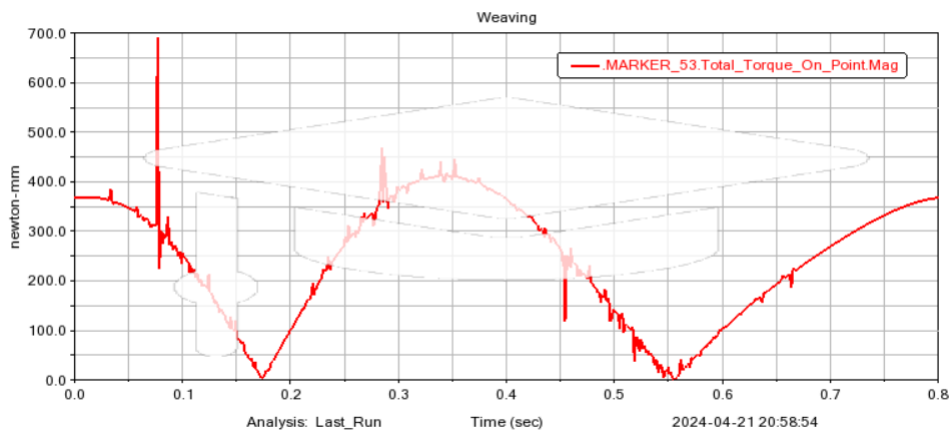

Figure 19: Torque vs Time

The average torque was found to be 0.24 Nm.

9.3 Power

Multiplying average torque with angular velocity 75 rpm (7.854 rad/s), we get average power, $P_{avg} = 1.8866$ W.
Also, the maximum and minimum values of torque were 0.6917 Nm and 0.0004 Nm. Therefore, the maximum and minimum values of power are 5.433 W and 0.0035 W respectively.

While the average power needed by the motor is about 1.8866 W, the motor should be able to support a maximum power of 5.433 W.

10 Comparison of Original and Alternate Mechanism

10.1 Displacement Comparison

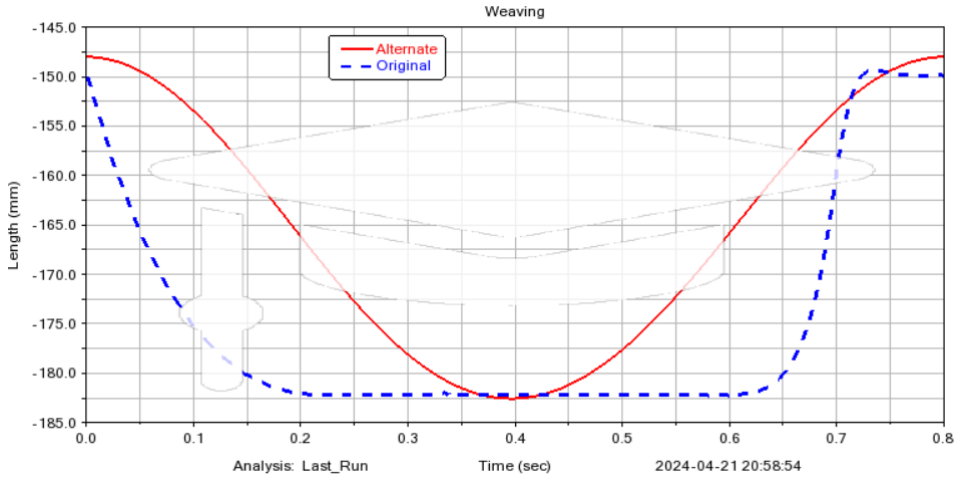

Figure 20: Superimposed plot: X displacement vs Time

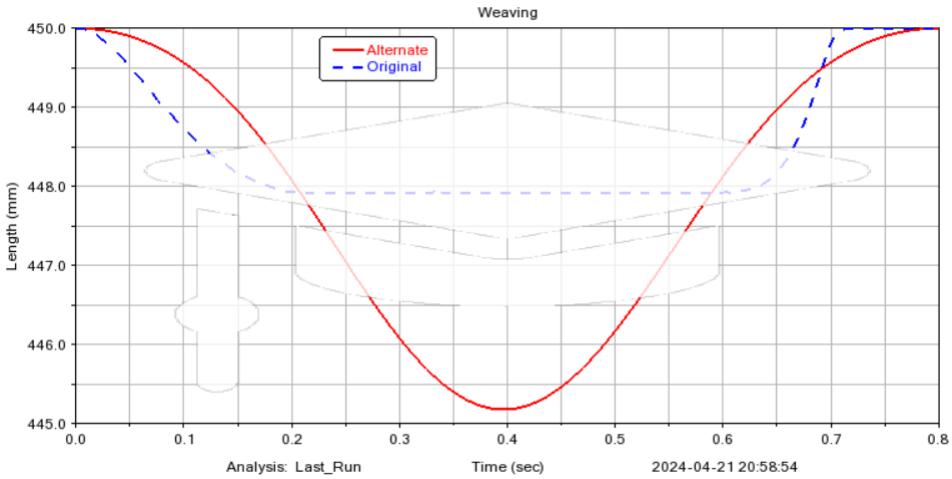

Figure 21: Superimposed plot: Y displacement vs Time

10.2 Trace Comparison

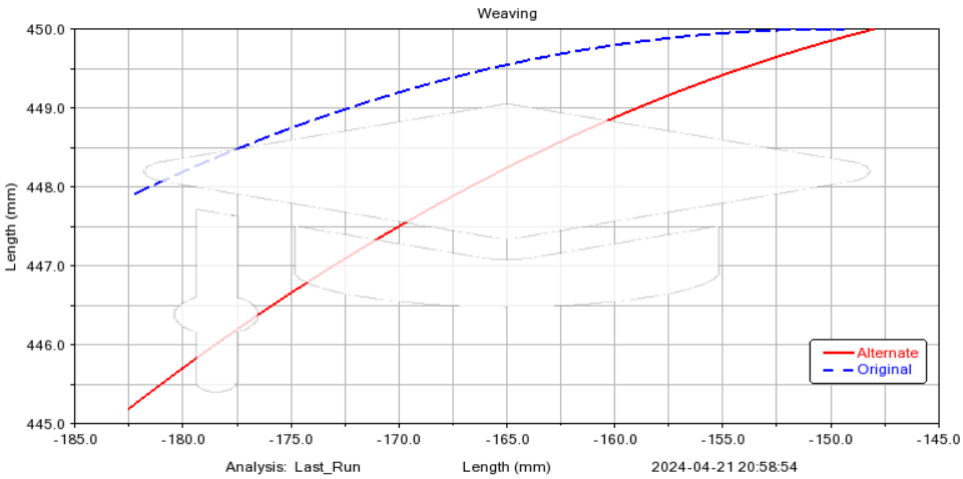

Figure 22: Superimposed plot: Trace(Y displacement vs X displacement)

10.3 Torque/Force Comparison

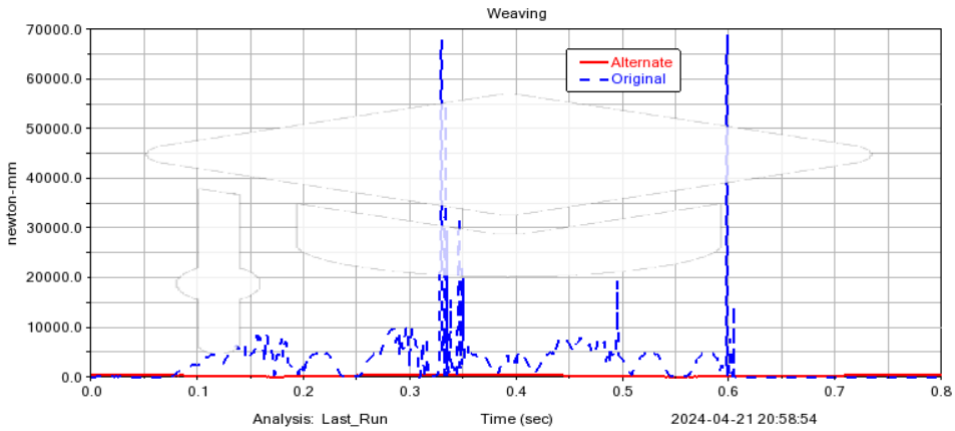

Figure 23: Superimposed plot: Torque vs Time

10.4 Power Comparison

For the original mechanism, the average power is 24.688 W and the power ranges from 0 W to 541.29 W. For the alternate mechanism, the average power is 1.8866 W and the power ranges from 0.0035 W to 5.433 W.

For the same value of speed, the original utilizes higher power than the alternate mechanism. This power is used to impart kinetic energy to the shuttle. Hence higher value of power is ideal. Also, due to the presence of the torsional spring, energy can be stored in the spring and released at the right time when the shuttle is in contact with point P. There is no storage of energy in the alternate mechanism.

11 Comments

11.1 Error Analysis

For the X displacement curve, the point P in the alternate mechanism does not remain idle. The trough is wider for the original mechanism while the crest is wider for the alternate mechanism. Also, there is a sharper incline and decline for the original mechanism. the same can be said for the Y displacement curve except that point P moves almost twice the Y displacement as in the original mechanism.
The torque required to drive the input component in the original mechanism is 13 times as compared to the alternate mechanism. Also, the torque plot is smoother for the alternate mechanism as compared to the original mechanism. There are lots of peaks and vibrations in the torque plot of the original mechanism as it is due to the presence of the cam and torsional spring.

11.2 Index of Merit

The original mechanism is qualitatively better at doing the picking motion. This is because it can impart high momentum in a very short time to the shuttle. The idle time for the picking mechanism is also necessary so that it only comes in contact with the shuttle at the right time. There is no idle time in the alternate mechanism and it can only impart low momentum to te shuttle.
However, there is smooth functioning for the alternate mechanism and this is good for the machine's health. Additionally, there will be less wear and tear for the alternate mechanism due to a lower amount of vibrations. But since the alternate mechanism fails to perform the exact function, the original mechanism has a better index of merit.

References

[1] Javed Ayub. *Picking Mechanism.* URL: `https://www.youtube.com/watch?v=mntCCnsMPPc&ab_channel=JAVEDAYUB`.

[2] Crystalline Textile Solution. *Projectile Loom.* URL: `https://crystallinetextilesolution.com/projectile-loom/`.