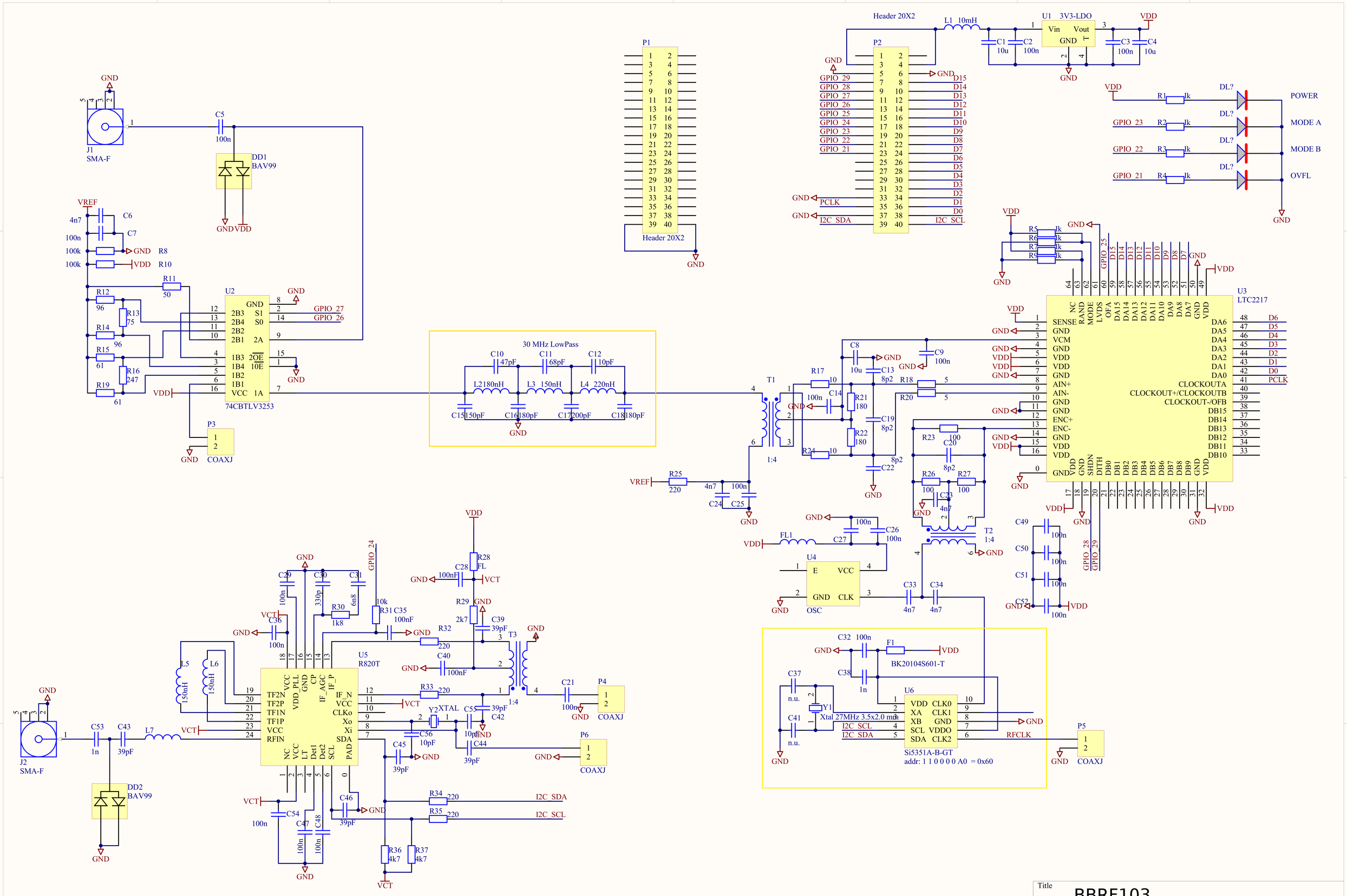

Title	BBRF103	
Size A3	Number	Revision 1
Date: 15/03/2017		Sheet of
File: C:\CAD\ltc2217\Sheet1.SchDoc		Drawn By: Oscar Steila