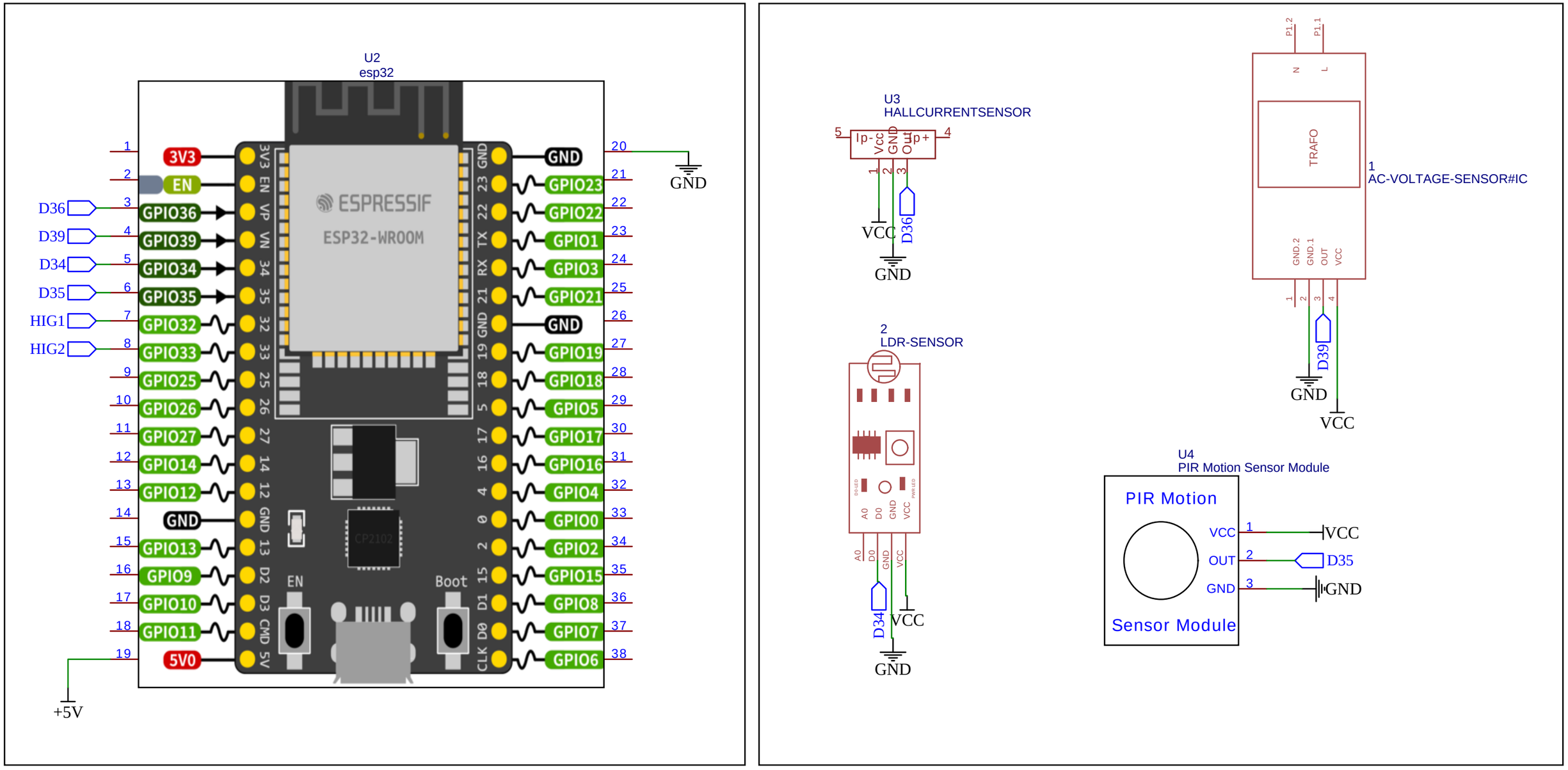

TITLE: Sheet_1		REV: 1.0
嘉立创EDA	Company: ABK ELECTRONICS	Sheet: 1/1
	Date: 2023-05-28 Drawn By: ARPPITH B KRISHNA	