Exercise 10 - GD&T (All Dimensions are in millimeter)

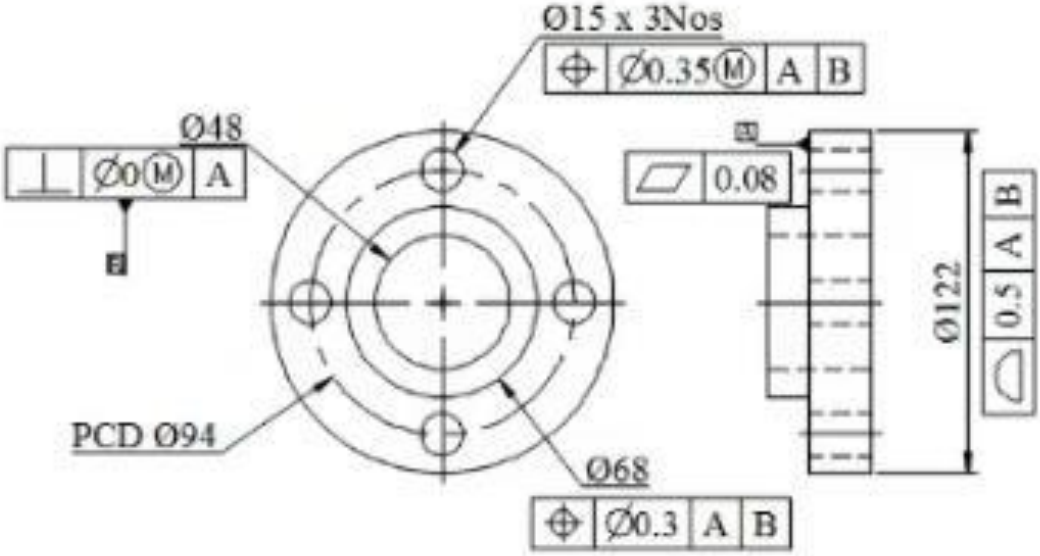

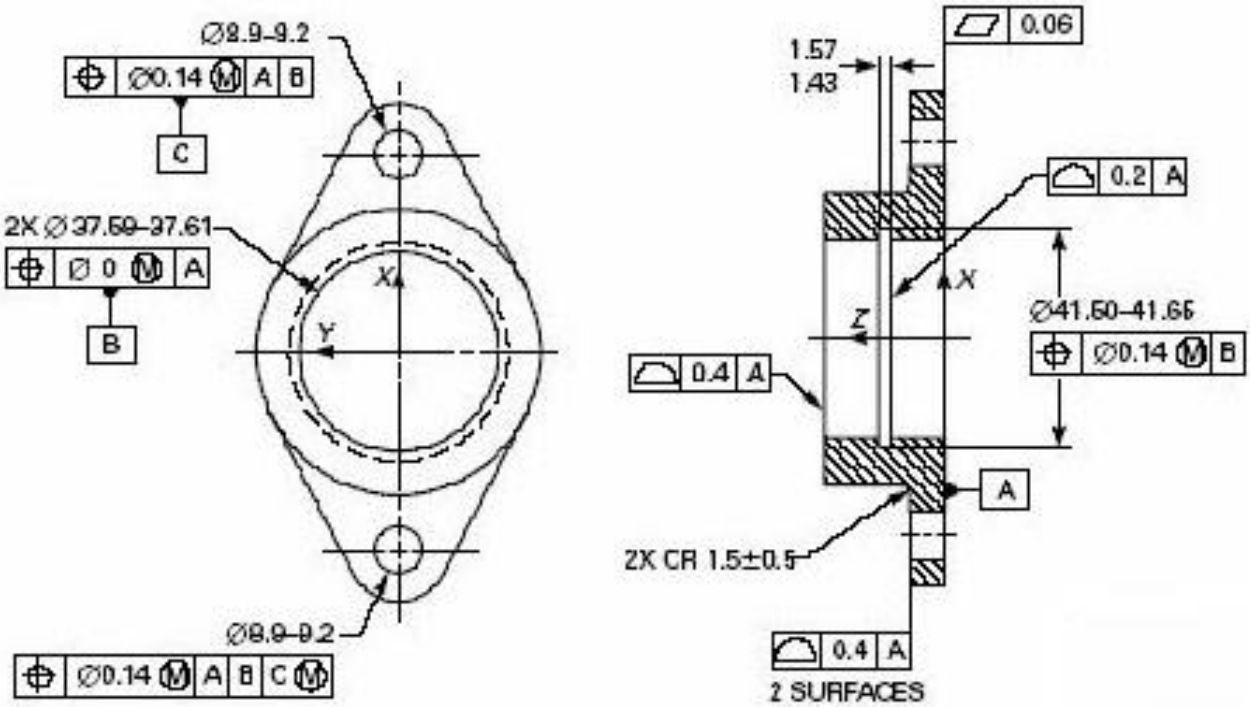

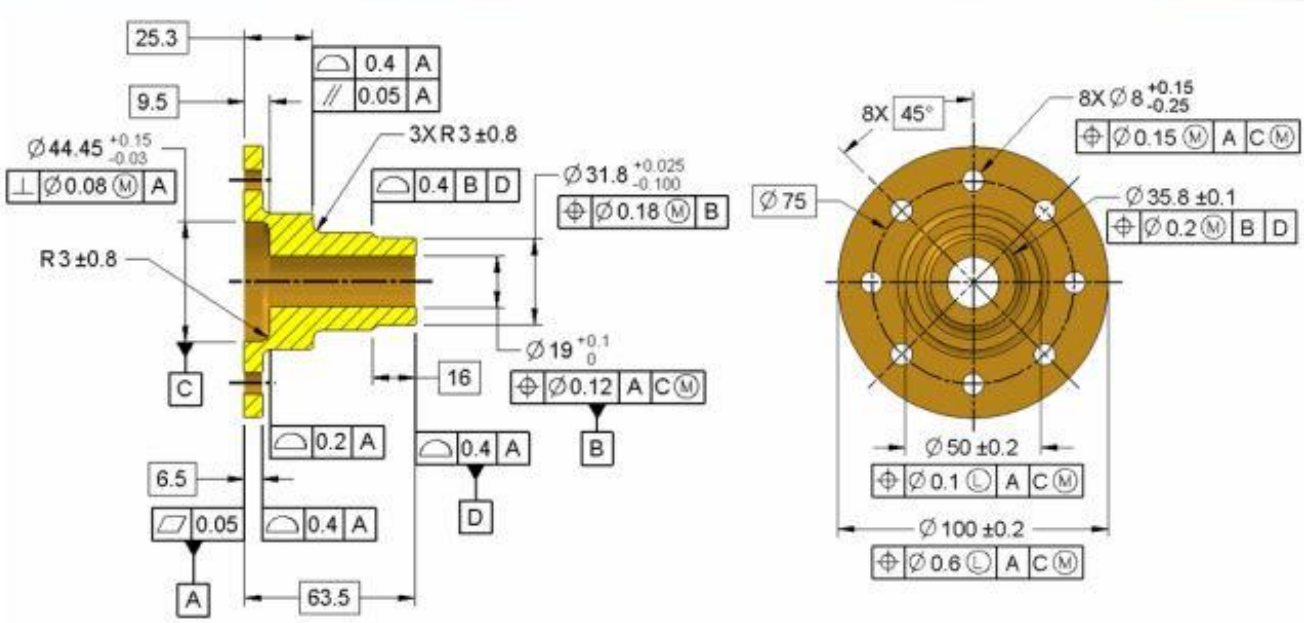
25.3
9.5
0.4 A
0.05 A
3X R 3 ±0.8
Ø44.45 +0.15 -0.03
Ø0.08 M A
0.4 B D
Ø31.8 +0.025 -0.100
Ø0.18 M B
R 3 ±0.8
Ø19 +0.1 0
16
Ø0.12 A C M
C
B
0.2 A
0.4 A
6.5
0.05
0.4 A
D
A
63.5
8X 45°
8X Ø 8 +0.15 -0.25
Ø0.15 M A C M
Ø75
Ø35.8 ±0.1
Ø0.2 M B D
Ø50 ±0.2
Ø0.1 L A C M
Ø100 ±0.2
Ø0.6 L A C M