MULTIPLE ACCESS

6.1 INTRODUCTION

Satellites are always built with the intention that many users will share the bandwidth allocated to the satellite, allowing many separate communication links to be established through the satellite's transponders. In a large geostationary satellite operated by an international carrier, the satellite can carry tens of thousands of simultaneous telephone conversations between people in many different parts of the world. A domestic satellite carrying television program material can broadcast its signals to thousands of cable television companies serving millions of homes. The ability of the satellite to carry many signals at the same time is known as *multiple access*. Multiple access allows the communication capacity of the satellite to be shared among a large number of earth stations, and to accommodate the different mixes of communication traffic that are transmitted by the earth stations.

The basic form of multiple access employed by all communications satellites is the use of many *transponders*. A large GEO satellite may have a communication bandwidth of over 2000 MHz within an allocated spectrum of 500 MHz. Through *frequency reuse* with multiple antenna beams and *orthogonal polarization*, the spectrum can be reused several times over—as many as seven times in the case of INTELSAT IX satellites. The frequency spectrum used by the satellite is divided into smaller bandwidths which are allocated to transponders, allowing separate communication links to be established via the satellite on the basis of transmit frequency. Transponder bandwidths of 36, 54, and 72 MHz have been commonly employed on GEO satellites. The individual transponders may carry one signal, a single analog television program, for example, or hundreds of signals, as with mobile satellite telephone systems. The use of multiple transponders to divide up a frequency band is not considered as multiple access, although the reason for their use is to make it easier for different earth stations to share the available frequency spectrum efficiently.

The signals that earth stations transmit to a satellite may differ widely in their character—voice, video, data, facsimile—but they can be sent through the same satellite using multiple access and *multiplexing* techniques[1,2]. Multiplexing is the process of combining a number of signals into a single signal, so that it can be processed by a single amplifier or transmitted over a single radio channel. Multiplexing can be done at baseband or at a radio frequency. The corresponding technique that recovers the individual signals is called *demultiplexing*. Multiplexing is a key feature of all commercial long-distance communication systems, and is part of the multiple access capability of all satellite communication systems.

The designer of a satellite communication system must make decisions about the form of multiple access to be used. The multiple access technique will influence the capacity and flexibility of the satellite communication system, its cost, and its ability to earn revenue. The basic problem in any multiple access system is how to permit a changing group of earth stations to share a satellite in such a way that satellite communication

Scanned by CamScanner

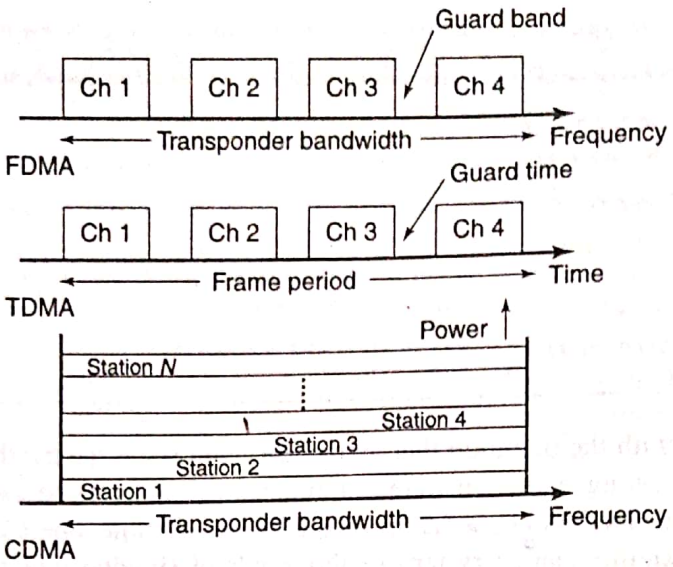

FIGURE 6.1 Multiple access techniques: FDMA, TDMA, and CDMA. Note that in the direct sequence form of CDMA shown here, all the channels overlap in both time and frequency.

capacity is maximized, bandwidth is used efficiently, flexibility is maintained, and cost to the user is minimized while revenue to the operator is maximized. The multiple access system should also allow for changing patterns of traffic over the 10 or 15 years of the expected lifetime of the satellite. Usually, all of these requirements cannot be satisfied at the same time and some may have to be traded off against others.

There are three basic multiple access techniques, illustrated in Figure 6.1. In *frequency division multiple access* (FDMA) all users share the satellite at the same time, but each user transmits at a unique allocated frequency. This approach to sharing the frequency spectrum is familiar to us all, as it is the way that radio broadcasting has always shared the air waves. Each radio station is allocated a frequency and a bandwidth, and transmits its signals within that piece of the frequency spectrum. FDMA can be used with analog or digital signals. In *time division multiple access* (TDMA) each user is allocated a unique time slot at the satellite so that signals pass through the transponder sequentially. Because TDMA causes delays in transmission, it is used only with digital signals. In *code division multiple access* (CDMA) all users transmit to the satellite on the same frequency and at the same time. The earth stations transmit orthogonally coded spread spectrum signals that can be separated at the receiving earth station by correlation with the transmitted code. CDMA is inherently a digital technique. In each of the multiple access techniques, some unique property of the signal (frequency, time, or code) is used to label the transmission such that the wanted signal can be recovered at the receiving terminal in the presence of all other signals.

The distinction between multiplexing and multiple access is sometimes blurred. Multiplexing applies to signals that are generated at one location, whereas multiple access refers to signals from a number of different geographical locations. For example, an earth station might use *time division multiplexing* (TDM) to create a high-speed digital data stream from many digital speech channels delivered to that earth station, and then modulate the data stream onto an RF carrier and transmit the carrier to the satellite. At the satellite, the carrier can share a transponder using time division multiple access (TDMA) or frequency division multiple access (FDMA) with other carriers from earth stations anywhere within the satellite's coverage zone. The resulting signal is called TDM-TDMA or TDM-FDMA. Note the distinction between TDM and TDMA: signals at one earth station are combined by multiplexing, and then share a satellite transponder with signals from other earth stations by multiple access.

Scanned by CamScanner

In all three of the classic multiple access techniques, some resource is shared. If the proportion allocated to each earth station is fixed in advance, the system is called *fixed access* (FA) or *preassigned access* (PA). If the resource is allocated as needed depending on changing traffic conditions, the multiple access technique is called *demand access* (DA). Demand access blurs some of the distinctions between FDMA and TDMA, since stations in an FDMA-DA system transmit only when they have traffic. Demand access with FDMA is widely used in VSAT systems, where earth stations may have traffic to send only intermittently[3]. Fixed assignment would be wasteful of transponder capacity, so demand assignment is used. Similarly, a group of earth stations may access part of the bandwidth of a transponder using TDMA, while other TDMA groups of earth stations share different sections of the transponder bandwidth. This approach has been used in both VSAT and mobile satellite systems. (See Chapter 9.) Demand assignment can also be used with CDMA to reduce the number of signals in the transponder at any one time. The Globalstar LEO mobile satellite system uses CDMA with demand assignment[4].

Systems which combine both FDMA and TDMA techniques are sometimes called *hybrid multiple access* schemes or *multifrequency TDMA* (MF-TDMA). In the sections that follow, we will first discuss FDMA, TDMA, and CDMA as fixed assignment schemes, and then cover demand access and hybrid multiple access.

6.2 FREQUENCY DIVISION MULTIPLE ACCESS (FDMA)

Frequency division multiple access was the first multiple access technique used in satellite communication systems. When satellite communications began in the 1960s, most of the traffic carried by satellites was telephony. All signals were analog, and analog multiplexing was used at earth stations to combine large numbers of telephone channels into a single baseband signal that could be modulated onto a single RF carrier. Individual telephone channels can be shifted in frequency from baseband to a higher frequency so that they can be stacked into a group of channels using *frequency division multiplexing* (FDM). The process begins by limiting individual telephone channels to the frequency range 300–3400 Hz, and then frequency shifting 12 channels to the frequency range 60–108 kHz with 4-kHz spacing between channels by generating single sideband suppressed carrier signals with 12 carrier frequencies spaced 4 kHz apart. The 12 channels occupying 60–108 kHz are known as a *basic group*. Five basic groups can be frequency shifted to the range 60–300 kHz to make a 60-channel *supergroup* occupying a baseband bandwidth of 240 kHz. Supergroups can be stacked in the baseband to make up single signals that consist of 300, 600, 900, or 1800 multiplexed telephone channels.

The analog FDM technique is now obsolete in the United States and many other countries, but it was the primary method of multiplexing telephone channels for transmission over terrestrial cable or microwave links for about 50 years. Early satellite systems used FDM to multiplex up to 1800 telephone channels into a wide baseband occupying up to 8 MHz, which was modulated onto an RF carrier using *frequency modulation* (FM). Appendix B describes the process of voice multiplexing using FDM techniques, and provides some details of satellite transmission of analog signals using FDM-FM-FDMA.

The FDM-FM RF carrier was transmitted to the satellite, where it shared a transponder with other carriers using FDMA. The technique is known as FDM-FM-FDMA, and was the preferred method for the transmission of telephone channels over Intelsat satellites for more than 20 years. The main advantage of FDMA is that filters can be used to separate signals. Filter technology was well understood when satellite

Scanned by CamScanner

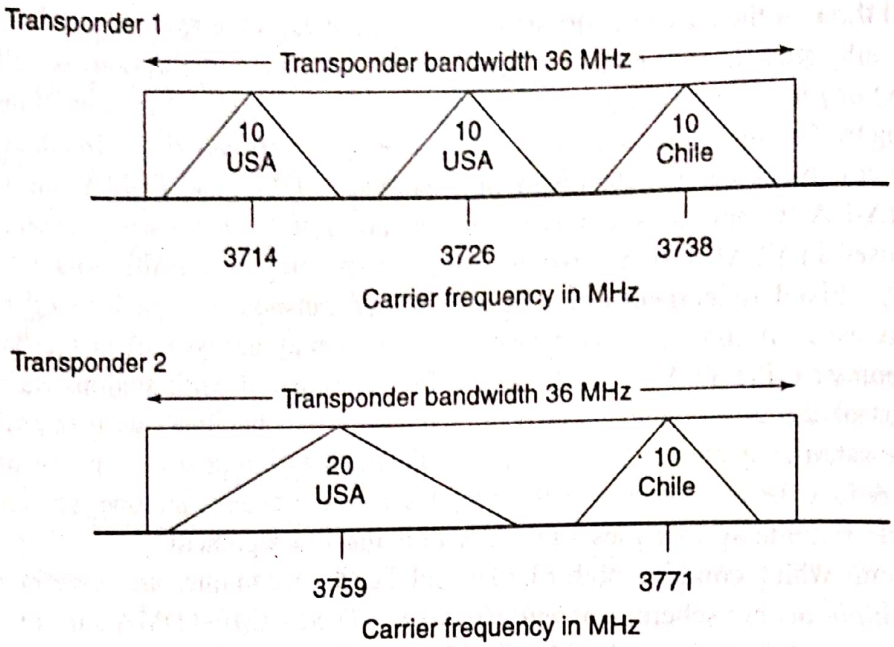

FIGURE 6.2 Frequency plan for two C-band transponders using FDMA. The triangles are symbols representing the bandwidth occupied by the signals, not power spectral densities. The places and figures within the triangles are the transmitting station location and carrier RF bandwidth. Frequencies shown are for the downlink from the satellite.

communications began, and microwave filters were used in earth stations to separate the FDMA signals within a given transponder. In a fixed assignment system, each transmitting earth station was allocated a frequency and bandwidth for each group of signals it wished to send.

Figure 6.2 shows a typical fixed assignment FDMA plan for two C-band transponders. The triangles represent RF carriers with the transmitting earth station and RF bandwidth shown inside the triangle. Frequencies shown are for the downlink from the satellite. Within each transmission, signals (primarily telephone channels) for different destinations are multiplexed using FDM. Typical Intelsat FDM carriers with a bandwidth of 10 MHz carried 132 to 252 telephone channels. If a small group of channels is intended for a given earth station, the entire carrier must be received and demultiplexed to recover those channels. Channels sent by the same carrier but intended for other earth stations are discarded. The 36 MHz transponder bandwidth can be used to send one or two television signals instead of hundreds of telephone channels.

The use of microwave filters to separate channels made the fixed assignment approach to FDMA very inflexible. Changing the frequency assignment or bandwidth of any one transmitting earth station required retuning of the microwave filters at several receiving earth stations. The fixed assignment FDM-FM-FDMA scheme illustrated in Figure 6.2 also makes inefficient use of transponder bandwidth and satellite capacity.

As an example, suppose an earth station in the west of the United States uses a Pacific Ocean GEO satellite to send telephone channels to earth stations in Korea, Japan, and Chile. The time difference between North America and the Pacific Rim countries means that the channels will be busy for only a few hours per day, and at a different time of day than the U.S.–Chile links. With fixed assignment, the frequencies and satellite capacity cannot be reallocated between routes, so much of the satellite capacity remains idle. Estimates of average loading of Intelsat satellites using fixed assignment are typically around 15%. It is not possible to achieve 100% loading of satellites used for international

Scanned by CamScanner

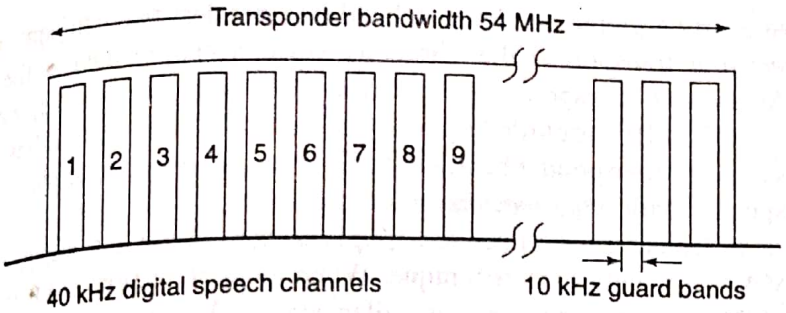

FIGURE 6.3 Illustration of a Ku-band transponder bandwidth filled with a large number of FDMA-SCPC digital speech channels. RF bandwidth of each channel is 40 kHz with 10 kHz guard bands between channels.

traffic, or even for domestic traffic in many cases. Demand assignment and single channel per carrier (SCPC) techniques allow higher loadings and therefore give satellite operators increased revenue. There has been a steady move away from fixed assignment systems as a result.

Every earth station that operates in an FDMA network must have a separate IF receiver for each of the carriers that it wishes to receive. SCPC systems can have a very large number of carriers in one transponder; as a result, FDMA earth stations tend to have a very large number of IF receivers and demultiplexers which select individual carriers using narrowband IF filters. Figure 6.3 shows how the intermediate frequency bandwidth of a receiving earth station could be configured to receive 1000 digital speech channels, each with a bandwidth of 40 kHz from a 54 MHz wide Ku-band transponder. The 10-kHz frequency spaces between the channels are called *guard bands*. Guard bands are essential in FDMA systems to allow the filters in the receivers to select individual channels without excessive interference from adjacent channels. All filters have a *roll-off* characteristic, which describes how rapidly a filter can change from near zero attenuation in its pass band to high attenuation in the stop band. Typically, guard bands of 10 to 25% of the channel bandwidth are needed to minimize adjacent channel interference.

FDM-FM-FDMA was a telephone transmission technique well suited to analog telephone signals. Telephony has largely become digital, and frequency division multiplexing has been replaced by time division multiplexing. Digital speech is now used throughout telephone systems, so multiple telephone channels are always transmitted as a high-speed digital signal. The T1 or DS-1 carriers are examples of lower speed digital multiplexed carriers. Optical networks carry OC–48 digital signals at rates up to 2.7 Gbps and beyond. Appendix B discusses the techniques used in FDM-FM-FDMA systems, and the calculation of system capacity using this multiple access scheme. Apart from the analog nature of FDM-FM-FDMA which has rendered it obsolete, it is a rather inflexible way to allocate satellite transponder capacity and is not easily adapted to demand access.

FDMA is widely used as a method of sharing the bandwidth of satellite transponders. Ideally, a satellite would carry a very large number of transponders, each of which could be allocated to a single RF carrier. In the case of telephony, each transponder would have a bandwidth exactly matched to the RF spectrum of the transmitted telephone channel, with tight filtering to ensure that each signal can be separated from adjacent signals. This approach is impractical: thousands of transponders would be needed and the satellite could be used only for telephony. The builders and operators of satellites have

Scanned by CamScanner

historically shown a strong preference for wideband transponders that can carry any type of traffic—the *bent pipe* transponder that can carry voice, video, or data as the marketplace demands. As a result, transponders have always had wide bandwidths, with bandwidths of 36, 54, and 72 MHz commonly employed. When an earth station has a carrier that occupies less than the transponder bandwidth, FDMA can be used to allow that carrier to share the transponder with other carriers.

Allocating a wideband transponder to a single narrow bandwidth signal is clearly wasteful, so FDMA is a widely used technique. When an earth station sends one signal on a carrier, the FDMA access technique is called *single channel per carrier* (SCPC). Thus a system in which a large number of small earth stations, such as mobile telephones, access a single transponder using FDMA is called a single channel per carrier frequency division multiple access scheme. Not surprisingly, this lengthy descriptor is abbreviated to SCPC-FDMA. Hybrid multiple access schemes can use time division multiplexing of baseband channels which are then modulated onto a single carrier. A number of earth stations can share a transponder using frequency division multiple access, giving a system known as TDM-SCPC-FDMA. Note that the sequence of abbreviations is baseband multiplexing technique first, then multiple access technique next. TDM-SCPC-FDMA is used by VSAT networks in which the earth stations carry more than one baseband signal.

FDMA has a disadvantage in satellite communications systems when the satellite transponder has a nonlinear characteristic. Most satellite transponders use high-power amplifiers which are driven close to *saturation*, causing nonlinear operation. A transponder using a *traveling wave tube amplifier* (TWTA) is more prone to nonlinearity than one with a *solid state high-power amplifier* (SSHPA). Equalization at the transmitting station, in the form of predistortion of the transmitted signal, can sometimes be employed to linearize the transponder when fixed assignment is used. Linearization of solid-state and TWT HPAs on the satellite is also possible. Nonlinearity of the transponder HPA causes a reduction in the overall $(C/N)_0$ ratio at the receiving earth station when FDMA is used because intermodulation (IM) products are generated in the transponder. Some of the IM products will be within the transponder bandwidth and will cause interference. The IM products are treated as though they were thermal noise, adding to the total noise in the receiver of the receiving earth station.

Intermodulation

Intermodulation products are generated whenever more than one signal is carried by a nonlinear device. Sometimes filtering can be used to remove the IM products, but if they are within the bandwidth of the transponder they cannot be filtered out. The saturation characteristic of a transponder can be modeled by a cubic curve to illustrate the generation of *third-order* intermodulation. Third-order IM is important because third-order IM products often have frequencies close to the signals that generate the intermodulation, and are therefore likely to be within the transponder bandwidth.

To illustrate the generation of third-order intermodulation products, we will model the nonlinear characteristic of the transponder HPA with a cubic voltage relationship and apply two unmodulated carriers at frequencies f_1 and f_2 at the input of the amplifier

$$V_{out} = AV_{in} + b(V_{in})^3 \tag{6.1}$$

where $A \gg b$.

The amplifier input signal is

$$V_1 \cos \omega_1 t + V_2 \cos \omega_2 t \tag{6.2}$$

Scanned by CamScanner

The amplifier output signal is

$$\begin{aligned} V_{out} &= AV_{in} + b(V_{in})^3 \\ &= \underbrace{AV_1 \cos\omega_1 t + AV_2 \cos\omega_2 t}_{\text{linear term}} + \underbrace{b(V_1 \cos\omega_1 t + V_2 \cos\omega_2 t)^3}_{\text{cubic term}} \end{aligned} \tag{6.3}$$

The linear term simply amplifies the input signal by a voltage gain A. The cubic term, which will be denoted as V_{3out}, can be expanded as

$$\begin{aligned} V_{3out} &= (V_1 \cos\omega_1 t + V_2 \cos\omega_2 t)^3 \\ &= b[V_1^3 \cos^3\omega_1 t + V_2^3 \cos^3\omega_2 t + \\ &\quad 2V_2^2 \cos^2\omega_2 t \times V_2 \cos\omega_2 t + 2V_2^2 \cos^2\omega_2 t \times V_1 \cos\omega_1 t] \end{aligned} \tag{6.4}$$

The first two terms contain frequencies f_1, f_2, $3f_1$, and $3f_2$. The triple frequency components can be removed from the amplifier output with band-pass filters. The second two terms generate the third-order IM frequency components.

We can expand the cosine squared terms using the trig identity $\cos^2 x = \frac{1}{2}[\cos 2x + 1]$. Hence the IM terms of interest become

$$\begin{aligned} V_{IM} &= bV_1^2 \times V_2[\cos\omega_2 t \times (\cos 2\omega_1 t + 1)] + \\ &\quad bV_2^2 \times V_1[\cos\omega_1 t \times (\cos 2\omega_2 t + 1)] \\ &= bV_1^2 \times V_2[\cos\omega_2 t \cos 2\omega_1 t + \cos\omega_2 t] + \\ &\quad bV_2^2 \times V_1[\cos\omega_1 t \cos 2\omega_2 t + \cos\omega_1 t] \end{aligned} \tag{6.5}$$

The terms at frequencies f_1 and f_2 add to the wanted output of the amplifier, so the third-order intermodulation products are generated by the $f_1 \times 2f_2$ and $f_2 \times 2f_1$ terms.

Using another trig identity

$$\cos x \cos y = \cos(x + y) + \cos(x - y)$$

The output of the amplifier contains IM frequency components given by

$$\begin{aligned} V'_{IM} &= bV_1^2 \times V_2[\cos(2\omega_1 t + \omega_2 t) + \cos(2\omega_1 t - \omega_2 t)] \\ &\quad + bV_2^2 \times V_1[\cos(2\omega_2 t + \omega_1 t) + \cos(2\omega_2 t - \omega_1 t)] \end{aligned} \tag{6.6}$$

We can filter out the sum terms in Eq. (6.6), but the difference terms, with frequencies $2f_1 - f_2$ and $2f_2 - f_1$ may fall within the transponder bandwidth. These two terms are known as the third-order intermodulation products of the high-power amplifier, because they are the only ones likely to be present at the output of a transponder which incorporates a narrow bandpass filter at its output. Thus the third-order intermodulation products that are of concern are given by V_{3IM} where

$$V_{3IM} = bV_1^2 V_2 \cos(2\omega_1 t - \omega_2 t) + bV_2^2 V_1 \cos(2\omega_2 t - \omega_1 t) \tag{6.7}$$

The magnitude of the IM products depends on the parameter b, which describes the nonlinearity of the transponder, and the magnitude of the signals. The wanted signals at the transponder output, at frequencies f_1 and f_2, have magnitudes AV_1 and AV_2. The wanted output from the amplifier is

$$V_{out} = AV_1 \cos\omega_1 t + AV_2 \cos\omega_2 t$$

The total power of the wanted output from the HPA, referenced to a 1 ohm load, is therefore

$$P_{out} = \tfrac{1}{2}A^2V_1^2 + \tfrac{1}{2}A^2V_2^2 = A^2(P_1 + P_2)\ \text{W} \tag{6.8}$$

where P_1 and P_2 are the power levels of the wanted signals. The power of the IM products at the output of the HPA is

$$P_{IM} = 2 \times (\tfrac{1}{2}b^2V_1^6 + \tfrac{1}{2}b^2V_2^6) = b^2(P_1^3 + P_2^3)\ \text{W} \tag{6.9}$$

Scanned by CamScanner

It can be seen that IM products increase in proportion to the cubes of the signal powers, with power levels that depend on the ratio $(b/A)^2$. The greater the nonlinearity of the amplifier (larger b/A ratio), the larger the IM products.

Intermodulation Example

Consider the case of a 36-MHz bandwidth C-band transponder which has an output spectrum for downlink signals in the frequency range 3705–3741 MHz. The transponder carries two unmodulated carriers at 3718 and 3728 MHz with equal magnitudes at the input to the HPA. Using Eq. (6.7), the output of the HPA will contain additional frequency components at frequencies

$$f_{31} = (2 \times 3718 - 3728) = 3708 \text{ MHz}$$
$$f_{32} = (2 \times 3728 - 3718) = 3738 \text{ MHz}$$

Both of the IM frequencies are within the transponder bandwidth and will therefore be present in an earth station receiver that is set to the frequency of this transponder. The magnitude of the IM products will depend on the ratio b/A, a measure of the nonlinearity of the HPA, and on the actual level of the two signals in the transponder.

Now consider the case where the two signals carry modulation which spreads the signal energy into a bandwidth of 8 MHz around each carrier. Carrier 1 has frequencies 3714 to 3722 MHz and carrier 2 has frequencies 3726 to 3734 MHz. Denoting the band of frequencies occupied by the signals as f_{nlo} to f_{nhi}, the intermodulation products cover the frequency bands

$$(2f_{1lo} - f_{2hi}) \quad \text{to} \quad (2f_{1hi} - f_{2lo}) \quad \text{and} \quad (2f_{2lo} - f_{1hi}) \quad \text{to} \quad (2f_{2hi} - f_{1lo}).$$

The IM products are spread over bandwidths $(2B_1 + B_2)$ and $(2B_2 + B_1)$.

Hence the third-order IM products for this example cover these frequencies:

3706 – 3730 MHz and 3716 – 3740 MHz with bandwidths of 24 MHz.

The location of the 8 MHz wide signals and 24 MHz wide IM products is illustrated in Figure 6.4. The intermodulation products now interfere with both signals, and also cover the empty frequency space in the transponder.

Third-order IM products grow rapidly as the output of the transponder increases toward saturation. Equation (6.9) shows that IM power increases as the cube of signal power: in decibel units, every 10 dB increase in signal power causes a 30 dB increase in IM product power. Consequently, the easiest way to reduce IM problems is to reduce the level of the signals in the HPA. The output power of an operating transponder is related to its

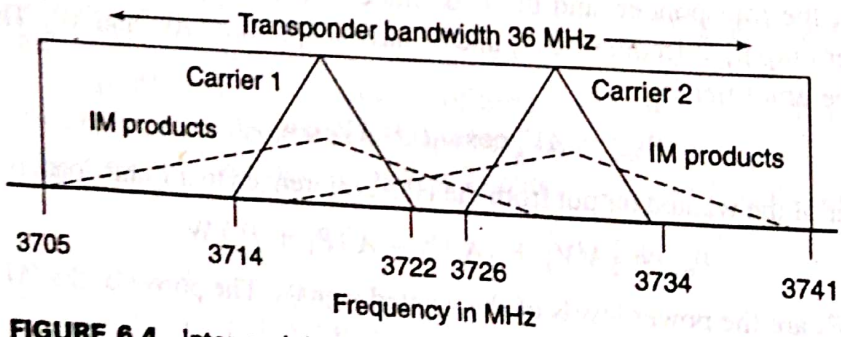

FIGURE 6.4 Intermodulation between two C-band carriers in a transponder with third-order nonlinearity.

Scanned by CamScanner

saturated output power by *output backoff*. Backoff is measured in decibel units, so a transponder with a 50 W rated (saturated) output power operating with an output power of 25 W has output backoff of 17 dBW − 14 dBW = 3 dB. Intermodulation products are reduced by 9 dB when 3 dB backoff is applied, so any nonlinear transponder carrying more than one signal will usually have some backoff applied. Since a transponder is an amplifier, the output power level is controlled by the input power, and there is a saturated input power level corresponding to the saturated output level. When the transponder is operated with output backoff, the power level at its input is reduced by the *input backoff*. Because the transponder characteristics are not linear, input backoff is always larger than output backoff. Figure 6.5 illustrates the operating point and input and output backoff for a transponder with a nonlinear TWTA. The nonlinearity of the transponder causes the input and output backoff values to be unequal. In the example shown in Figure 6.5, the transponder saturates at an input power of −100 dBW. The transponder is operated at an input power of −102.2 dBW, giving an input backoff of −2.2 dB. The corresponding output backoff is 1.0 dB, giving an output power of 16 dBW (40 W), 10 W below the saturated output power of 50 W (17 dBW).

Note that the TWTA has slightly different characteristics when operated with a single carrier and multiple carriers. The generation of intermodulation products when multiple carriers are present robs the wanted output of some of the transponder output power. For the nonlinearity shown in Figure 6.5, the reduction in output power is 0.6 dB at saturation.

In the example above, both carriers had equal power. If the powers are unequal, the weaker signal may be swamped by intermod products from the stronger carrier. This can be seen from Eq. (6.9); the IM products that tend to affect Carrier 1 have voltages proportional to the square of the voltage of Carrier 2.

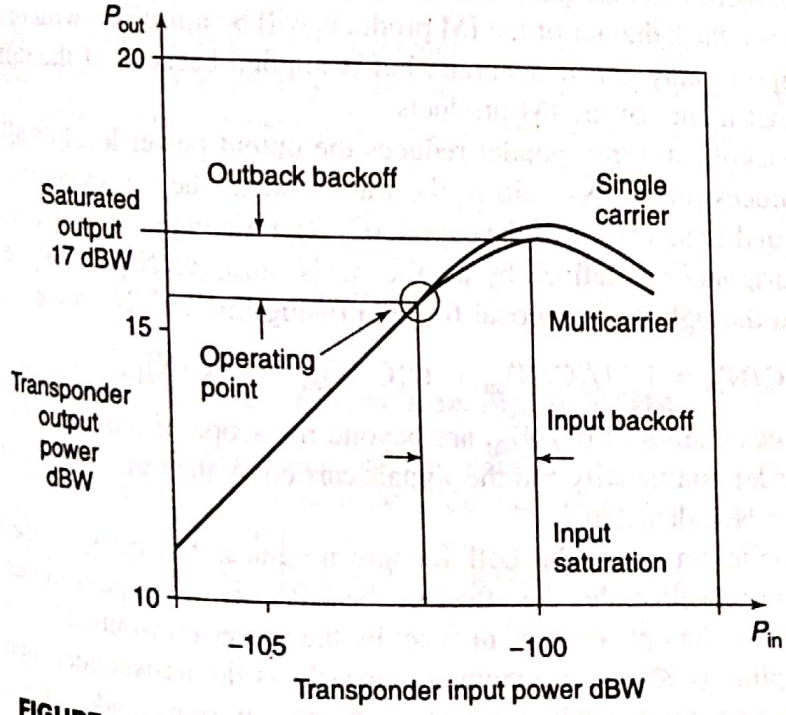

FIGURE 6.5 Typical input–ouput characteristic of a transponder using a traveling wave tube amplifier (TWTA). To maintain quasi-linear operation and minimize intermodulation problems with multiple carriers, the transponder must be operated below its saturated output power level. In this example, the saturated output power from the transponder is 50 W (17 dBW) with a single carrier. The saturated output power is slightly lower with multiple carriers because some output power is converted to intermodulation products.

Scanned by CamScanner

Operation of a nonlinear transponder with multiple carriers requires careful balancing of the power levels of each carrier so that intermodulation products are evenly spread across the transponder's bandwidth. Judicious spacing of the carriers can be used to place the highest intermods in gaps between carriers. The process is known as *loading* the transponder. Sophisticated computer programs are used by satellite operators to optimize the backoff level of a transponder such that intermodulation is minimized while output power is maximized. When a very large number of carriers access a transponder using FDMA, as might happen with a network of VSAT stations or a transponder used with mobile satellite telephones, the transponder must operate in a *quasi-linear* region of its characteristics. Quasi-linear means almost linear, either by equalization or by the application of a large output backoff.

Earth station HPAs can also cause intermodulation if they carry multiple carriers and operate close to saturation. In large earth stations where multiple carriers are more likely to be transmitted, the HPA is often rated at a much higher level than the expected transmit power. This allows substantial backoff to be used, keeping the amplifier in its linear region.

In the above analysis of third-order intermodulation, only two carriers were considered. If there are three (or more) carriers present in a nonlinear transponder, intermodulation products at frequencies such as $f_1 + f_2 - f_3$ can be generated that are likely to be within the transponder bandwidth. When many carriers are present, as with a transponder carrying narrowband SCPC signals, there will be a very large number of IM products, making quasi-linear operation essential.

Calculation of C/N with Intermodulation

Intermodulation between carriers in a nonlinear transponder adds unwanted products into the transponder bandwidth that are treated as though the interference were Gaussian noise. For wideband carriers, the behavior of the IM products will be noiselike; with narrowband carriers, the assumption may not be accurate, but is applied because of the difficulty of determining the exact nature of the IM products.

The output backoff of a transponder reduces the output power level of all carriers, which therefore reduces the (C/N) ratio in the transponder. The transponder C/N ratio appears as $(C/N)_{up}$ in the calculation of the overall $(C/N)_0$ ratio in the earth station receiver. IM noise in the transponder is defined by another C/N ratio, $(C/N)_{IM}$, which enters the overall $(C/N)_0$ ratio through the reciprocal formula (using linear C/N power ratios)

$$(C/N)_0 = 1/[1/(C/N)_{up} + 1/(C/N)_{dn} + 1/(C/N)_{IM}] \tag{6.10}$$

Techniques for the calculation of $(C/N)_{IM}$ are beyond the scope of this text. Full knowledge of the transponder nonlinearity and the signals carried by the transponder is required to permit $(C/N)_{IM}$ to be calculated[5,6].

There is an optimum output backoff for any nonlinear transponder operating in FDMA mode. Figure 6.6 illustrates the effect of the HPA operating point on each C/N ratio in Eq. (6.10) when the operating point is set by the power transmitted by the uplink earth station. The uplink $(C/N)_{up}$ ratio increases linearly as the transponder input power is increased, leading to a corresponding nonlinear increase in transponder output power. As the nonlinear region of the transponder is reached, the downlink $(C/N)_{dn}$ ratio increases less rapidly than $(C/N)_{up}$ because the nonlinear transponder is going into saturation. Intermodulation products start to appear as the nonlinear region is approached, increasing rapidly as saturation is reached. With a third-order model for nonlinearity, the intermodulation products increase in power at three times the rate at which the input power to

Scanned by CamScanner

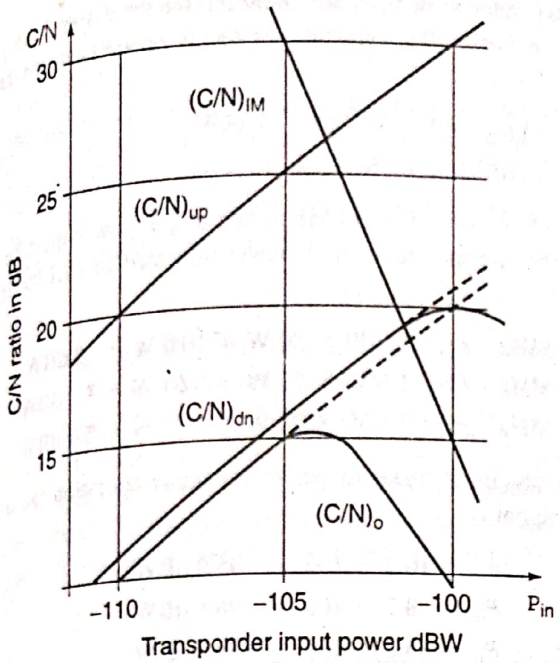

FIGURE 6.6 C/N ratios for a link using the nonlinear transponder illustrated in Figure 6.5. Overall $(C/N)_0$ at the receiving earth station is the combination of the three C/N ratios shown in this figure. As the power level at the input of the transponder is increased, $(C/N)_{up}$ in the transponder increases linearly, but $(C/N)_{dn}$ in the earth station receiver increases less rapidly as the transponder saturates. Third-order intermodulation products are generated in the transponder as it saturates, causing overall $(C/N)_0$ to peak at an input level of −104 dBW. This is the optimum operating point for this transponder. The dashed lines show C/N ratios for a transponder that does not saturate.

the transponder is increases, causing $(C/N)_{IM}$ to decrease rapidly as saturation is approached. When all three C/N ratios are combined through Eq. (6.10), the overall $(C/N)_0$ ratio in the receiving earth station receiver has a maximum value at an input power level of −104 dBW in the example in Figure 6.6. This is the optimum operating point for the transponder. The optimum operating point may be many decibels below the saturated output level of the transponder under some conditions[5].

VSAT networks and mobile satellite telephones often use single channel per carrier (SCPC) FDMA to share transponder bandwidth. Because the carriers are narrowband, in the 10 to 128 kHz range typically, a 36 or 54 MHz transponder may carry many hundreds of carriers simultaneously. The balance between the power levels of the carriers may not be maintained, especially in a system with mobile transmitters that can be subject to fading. The transponder must operate in a linear mode for such systems to be feasible, either by the use of a linear transponder or by applying large output backoff to force operation of the transponder into its linear region.

EXAMPLE 6.2.1 *Power Sharing in FDMA*

Three identical large earth stations with 500 W saturated output power transmitters access a 36 MHz bandwidth transponder using FDMA. The transponder saturated output power is 40 W and it is operated with 3 dB output backoff when FDMA is used. The gain of the transponder is 105 dB in its linear range. The bandwidths of the earth station signals are

Station A:	15 MHz
Station B:	10 MHz
Station C:	5 MHz

Find the power level at the output of the transponder, and at the input to the transponder, in dBW, for each earth station signal, assuming that the transponder is operating in its linear region with 3 dB output backoff. Each earth station must transmit 250 W to achieve an output power of 20 W from the transponder. Find the transmit power for each earth station when the transponder is operated with FDMA by the three earth stations.

Scanned by CamScanner

The output power of the transponder must be shared between the three signals in proportion to their bandwidths. The output backoff of 3 dB means that the output power from the transponder is P_t where

$$P_t = 10 \log_{10} 40 - 3 = 16 - 3 \text{ dBW}$$
$$= 13 \text{ dBW} = 20 \text{ W}$$

The total bandwidth used is 15 + 10 + 5 = 30 MHz. The output power must be shared in proportion to bandwidth used, so the transponder output power allocated to each earth station's signal is

Station A: B = 15 MHz $P_t = 15/30 \times 20 \text{ W} = 10.0 \text{ W} = 10 \text{ dBW}$
Station B: B = 10 MHz $P_t = 10/30 \times 20 \text{ W} = 6.67 \text{ W} = 8.2 \text{ dBW}$
Station C: B = 5 MHz $P_t = 15/30 \times 20 \text{ W} = 3.33 \text{ W} = 5.2 \text{ dBW}$

The transponder gain is 105 dB, in its linear range, so for linear operation the transponder input power for each earth station signal is

Station A: $P_{in} = 10.0 - 105 = -95.0 \text{ dBW}$
Station B: $P_{in} = 8.2 - 105 = -96.8 \text{ dBW}$
Station C: $P_{in} = 5.2 - 105 = -99.8 \text{ dBW}$

The EIRP at each earth station must be set to give the correct input power at the input to the transponder. A single earth station must transmit 250 W = 24 dBW to achieve a transponder output of 20 W. For the transponder output power levels of each signal calculated above, the earth station transmitter powers are

Station A: $P_t = 24.0 - 3.0 = 21.0 \text{ dBW} = 126 \text{ W}$
Station B: $P_t = 24.0 - 4.8 = 19.2 \text{ dBW} = 83 \text{ W}$
Station C: $P_t = 24.0 - 7.8 = 16.2 \text{ dBW} = 42 \text{ W}$ ∎

EXAMPLE 6.2.2 *Channel Capacity with Demand Access FDMA*

A large number of satellite telephones can access a single transponder on an LEO satellite using FDMA-DA. Data transmitted from the satellite on initial access by the telephone is used to set the transmit frequency and output power of the satellite telephone. The telephones transmit BPSK signals in L band with an occupied bandwidth of 12 kHz and an output power level between 0.05 and 0.5 W, such that the power level at the input to the transponder is always −144 dBW for any uplink signal. The resulting C/N ratio in clear air conditions for any one signal in the transponder is 16 dB. The transponder has a bandwidth of 1.0 MHz, a gain of 134 dB, and a maximum permitted output power of 5 W. The center frequencies of the telephone transmitters are spaced 16 kHz apart to provide a 4 kHz guard band between each signal.

Determine the maximum number of satellite telephones which can simultaneously access the transponder. Is the transponder power or bandwidth limited? If the transponder is power limited, what change could be made to increase the number of signals the transponder carries? What effect would the change have on overall $(C/N)_0$ for the link?

If the transponder is bandwidth limited, the maximum number of signals, N_{max}, that it could carry is the available bandwidth divided by the signal bandwidth plus the guard band width

$$N_{max} = 1000 \text{ kHz}/16 \text{ kHz} = 62$$

The value of N_{max} must be rounded down to the next lowest integer because we cannot send fractional signals.

The power level of each signal at the input to the transponder is −144 dBW. The gain of the transponder is 134 dB, so the output power for each signal is

$$P_t = -144 + 134 = -10 \text{ dBW} = 0.1 \text{ W}$$

Scanned by CamScanner

If we have 62 signals, each at a power level of 0.1 W, the total power at the output of the transponder is 6.2 W. This exceeds the maximum permitted output power of the transponder, which was set at 5.0 W. Hence the maximum number of satellite telephones that can simultaneously access the transponder is 50, and the transponder is power limited.

We can increase the number of signals in the transponder to 62, which is the maximum possible number of telephones that can share the transponder at the same time because of the bandwidth limit, by reducing the input power level by $10 \log_{10}(62/50) = 0.9$ dB. Then the output power from the transponder, per signal, is

$$P_t = -144.8 + 134 = -10.9 \text{ dBW} = 0.081 \text{ W}$$

We can now transmit 62 signals from the transponder with a total output power level of $62 \times 0.081 = 5.0$ W, which meets the power limitation for the transponder.

The C/N ratio in the transponder will be reduced by 0.9 dB because the input signal is 0.9 dB weaker. Hence $(C/N)_{up} = 16 - 0.9 = 15.1$ dB. The transponder now transmits 0.9 dB less power per signal, which will reduce the $(C/N)_{dn}$ ratio at the receiving earth station by 0.9 dB. Hence the overall $(C/N)_0$ ratio for the link will be reduced by 0.9 dB when the number of satellite telephones sharing the transponder is increased from 50 to 62. ■

6.3 TIME DIVISION MULTIPLE ACCESS (TDMA)

In time division multiple access a number of earth stations take turns transmitting bursts of RF signals through a transponder. Since all practical TDMA systems are digital, TDMA has all the advantages over FDMA that digital signals have over analog. TDMA systems, because the signals are digital and can be divided by time, are easily reconfigured for changing traffic demands, are resistant to noise and interference, and can readily handle mixed voice, video, and data traffic. One major advantage of TDMA when using the entire bandwidth of a transponder is that only one signal is present in the transponder at one time, thus overcoming many of the problems caused by nonlinear transponders operating with FDMA. However, using all of the transponder bandwidth requires every earth station to transmit at a high bit rate, which requires high transmitter power, and TDMA is not well suited to narrowband signals from small earth stations. Nonlinearity in the transponder can cause an increase in intersymbol interference with digital carriers; equalizers can be used at the receiving earth stations to mitigate the effect.

Many of the concepts developed in Chapter 5 for time division multiplexing (TDM) also apply to TDMA. The difference between TDM and TDMA is that TDM is a baseband technique used at one location (for example, a transmitting earth station) to multiplex several digital bit streams into a single higher speed digital signal. Groups of bits are taken from each of the bit streams and formed into baseband packets or frames that also contain synchronization and identification bits. At a receiving earth station, the high-speed bit stream must first be recovered using the techniques discussed in Chapter 5, which requires demodulation of the RF carrier, generation of a bit clock, sampling of the received waveform, and recovery of the bits. The synchronization bits or words in the packets or frames must then be found so that the high-speed bit stream can be split into its original lower speed signals. The clock frequency for the bit stream is fixed, and the frame length is usually constant. Packet lengths can vary, however, which is the main difference between frames and packets. The entire process requires considerable storage of bits so that the original signals can be rebuilt, leading to delays in transmission. In a GEO satellite system, the largest delay is always the transmission time to the satellite and back to earth, typically 240 ms. The transmission delay is unavoidable, but any additional delays should be minimized.

TDMA – for digital signals
FDMA – for Analog "

Scanned by CamScanner

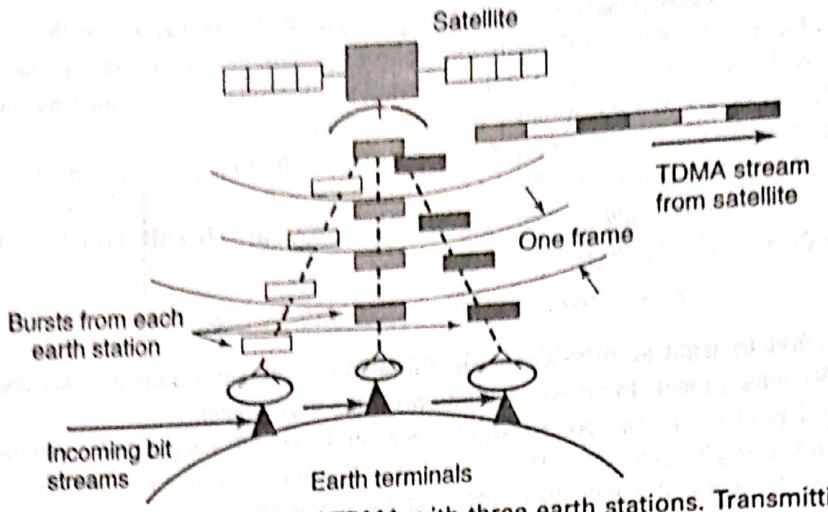

FIGURE 6.7 Illustration of TDMA with three earth stations. Transmitting earth stations must time their burst transmissions so that they arrive at the satellite in the correct sequence. The signal transmitted by the satellite is a continuous sequence of bursts separated by short guard times.

TDMA is an RF multiple access technique that allows a single transponder to be shared in time between RF carriers from different earth stations. In a TDMA system, the RF carrier from each earth station sharing a transponder is sent as a burst at a specific time. At the satellite, bursts from different earth stations arrive sequentially, so the transponder carries a near continuous signal made up of a sequence of short bursts coming from different earth stations. The principle of TDMA is illustrated in Figure 6.7.

The burst transmission is assembled at a transmitting earth station so that it will correctly fit into the TDMA frame at the satellite. The frame has a length from 125 μs to many milliseconds, and the burst from the earth station must be transmitted at the correct time to arrive at the satellite in the correct position within the TDMA frame. This requires synchronization of all the earth stations in a TDMA network, adding considerable complexity to the equipment at the transmitting station. Each station must know exactly when to transmit, typically within a microsecond, so that the RF bursts arriving at the satellite from different earth stations do not overlap. (A time overlap of two RF signals is called a *collision* and results in data in both signals being lost. Collisions must not be allowed to occur in a TDMA system.)

A receiving earth station must synchronize its receiver to each of the sequential bursts in the TDMA signal and recover the transmission from each uplink earth station. The uplink transmissions are then broken down to extract the data bits, which are stored and reassembled into their original bit streams for onward transmission. The individual transmissions from different uplink earth stations are usually sent using BPSK or QPSK and will inevitably have small differences in carrier and clock frequencies, and different carrier phases. The receiving earth station must synchronize its PSK demodulator to each burst of signal within a few microseconds, and then synchronize its bit clock in the next few microseconds so that a bit stream can be recovered. In high-speed TDMA systems, operating at 120 Mbps, for example, these are demanding requirements.

Bits, Symbols, and Channels

A potential source of confusion in the discussion of TDMA systems is that QPSK (or possibly QAM) modulation is typically used by transmitting earth stations, and data rates can

Scanned by CamScanner

then be described either by bit rate or symbol rate. Both bit rates and symbol rates need to be used in the discussion of digital radio transmission and TDMA systems, so the reader must be clear on the distinction between a bit and a symbol.

A bit is the fundamental unit in digital transmission. Data are generated by terminals (e.g., a personal computer) as bits, or by conversion of an analog speech or video signal to digital form as a serial bit stream. The bit stream is described by its bit rate, in bits per second, bps, thousands of bits per second, kbps, or millions of bits per second, Mbps. (Note that the k and M prefixes are in units of 10^3 and 10^6, not the binary digital version of 1024 and 1,048,576.) The bit stream must be modulated onto an RF carrier for transmission to the satellite. Phase shift keying is invariably used as the modulation technique. In *binary phase shift keying*, BPSK, the logical data states of the bits, 1 and 0, are converted into two opposite phase states of the RF carrier, say 0° and 180°. In *quadrature phase shift keying*, QPSK, two bits at a time are converted into one of four phase states of the RF carrier (see Chapter 5 for details of QPSK). The state of the RF carrier is called a *symbol*, and the symbol rate is in units of bauds, or symbols per second. For BPSK, bit rate and baud rate are the same. For QPSK, the baud rate (symbol rate) is one half the bit rate. The importance of symbol rate in any digital radio system is that it is the symbol rate, not the bit rate, that determines the bandwidth of the RF signal, and consequently the bandwidth of the filters in the receiver.

Occasionally, QAM modulation may be used on a satellite link. In QAM, carrier symbols are generated from the four phase states of QPSK, but can also have different amplitudes. This allows one symbol to convey more than 2 bits, which reduces the RF bandwidth required for a given bit rate. However, an increased $(C/N)_0$ ratio is required in the receiver to recover bits from QAM signals, so QAM can only be used in satellite links with higher than usual $(C/N)_0$ ratios.

Baud Rate = $\frac{\text{Bit Rate}}{\log_2 M}$ = Symbol rate

TDMA Frame Structure

A TDMA frame contains the signals transmitted by all of the earth station in a TDMA network. It has a fixed length, and is built up from the burst transmissions of each earth station, with *guard times* between each burst. The frame exists only in the satellite transponder and on the downlinks from the satellite to the receiving earth stations. Figure 6.8 shows a simplified diagram of a TDMA frame for four transmitting earth stations. Each station transmits a preamble that contains synchronization and other data essential to the operation of the network before sending data. The earth station's transmission is followed by a guard time to avoid possible overlap of the following transmission. In GEO satellite systems, frame lengths of 125 μs up to 20 ms have been used, although 2 ms has been widely used by stations using Intelsat satellites. Earth stations must be able to join the network, add their bursts to the TDMA frame in the correct time sequence, and leave the network

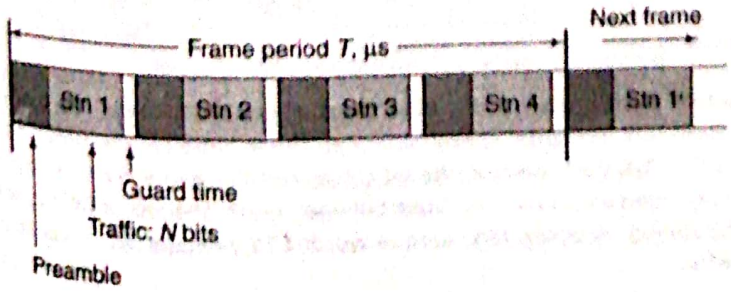

FIGURE 6.8 TDMA frame with four transmitting earth stations.

Bit rate = $\frac{\text{bits}}{\text{Symbol}} \times \frac{\text{Symbols}}{\text{sec}}$ $\frac{\text{bits}}{\text{Symbol}} \times \frac{\text{Symbol}}{\text{rate}}$

Scanned by CamScanner

without disrupting its operation. They must also be able to track changes in the timing of the frame caused by motion of the satellite toward or away from the earth station. Each earth station must also be able to extract the data bits and other information from burst transmissions of other earth stations in the TDMA network. The transmitted bursts must contain synchronization and identification information that help receiving earth stations to extract the required information without error.

These goals are achieved by dividing TDMA transmissions into two parts: a *preamble* containing all the synchronization and identification data, and a group of *traffic bits*. Synchronization of the TDMA network is achieved with the portion of the preamble transmitted by each earth station that contains carrier and bit clock synchronization waveforms. In some systems, a separate *reference burst* may be transmitted by one of the stations, designated as the master station. A reference burst is a preamble followed by no traffic bits. Traffic bits are the revenue producing portion of each frame, and the preamble and reference bursts represent *overhead*. The smaller the overhead, the more efficient the TDMA system, but the greater the difficulty of acquiring and maintaining network synchronization. The preamble of each station's burst transmission requires a fixed transmission time. A longer frame contains proportionally less preamble time than a short frame, so more revenue producing data bits can be carried in a long frame. Early TDMA systems were designed around 125 μs frames, to match the sample rate of digital speech in telephone systems, in exactly the same way that T1 24-channel systems operate. A digital telephone channel generates one 8-bit digital word every 125 μs (8 kHz sampling rate), so a 125-μs frame transmits one word from each speech channel. However, it is more efficient to lengthen the frame to 2 ms or longer so that the proportion of overhead to message transmission time is reduced. It must be remembered that a longer frame requires multiple 8-bit words when transmitting digital speech. For example, in a time period of 2 ms, a digital *terrestrial channel* will deliver sixteen 8-bit words, so a 2-ms TDMA frame requires sixteen 8-bit words from each terrestrial channel in each transmitted burst.

Figure 6.9 shows a typical TDMA frame with 2.0 ms duration used by some earth stations operating in TDMA through Intelsat satellites. All of the blocks at the start of the

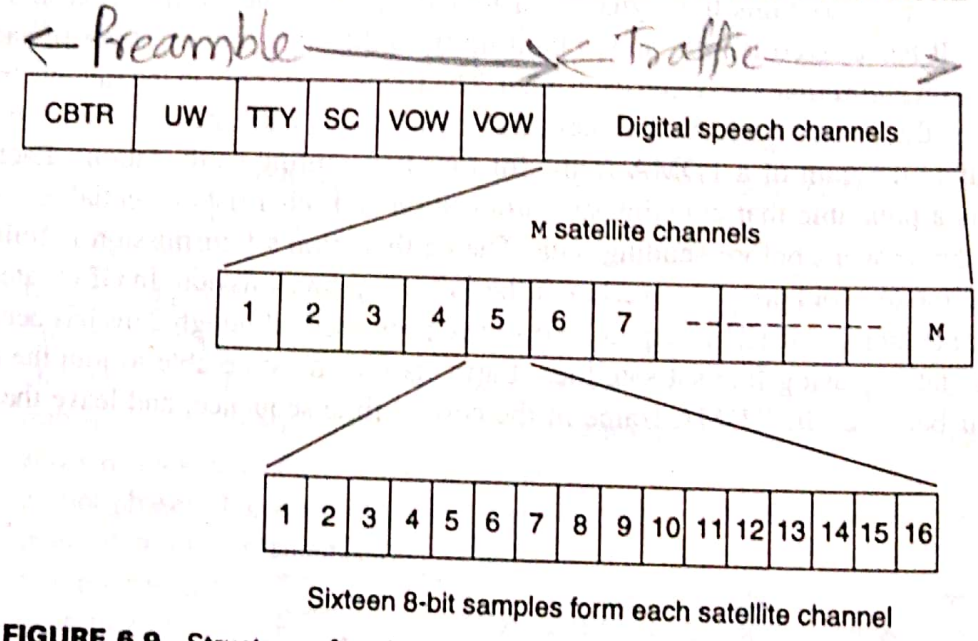

FIGURE 6.9 Structure of an Intelsat traffic data burst. A satellite channel is a block of sixteen 8-bit samples from one terrestrial speech channel. Other blocks in the traffic burst are used to synchronize the PSK demodulator, the bit clock, and the frame clock in the receiver (CBTR, UW) and to provide communication links between earth stations (TTY, SC, and VOW). CBTR, carrier and bit timing recovery; UW, unique word; TTY, teletype; SC, satellite channel; VOW, voice order wire.

Scanned by CamScanner

frame, labeled CBTR through VOW, are preamble. Speech channel data transmission begins with satellite channel 1 and continues as a serial bit stream through channel M. A satellite channel is made up of the number of bits delivered to the earth station by a single digital speech channel during one frame period. The frame can equally well send digital data of any form as a serial stream of bits occupying the space taken up by M satellite channels.

For the specific case of digital speech channels using serial transmission at a rate r_{sp}, the number of speech channels, n, that can be transmitted in a TDMA frame shared equally by N earth stations can be calculated from the duration of the frame, T_{frame} in seconds, the guard time and preamble length, t_g and t_{pre}, in seconds, and the transmitted bit rate of the TDMA system, R_b. The time, T_d, available in each station burst for transmission of data bits is

$$T_d = [T_{frame} - N(t_g + t_{pre})]/N \text{ seconds} \tag{6.11}$$

In 1 s, the total number of bits, C_b, transmitted by each earth station is

$$C_b = [T_{frame} - N(t_g + t_{pre})] \times R_b/T_{frame} \tag{6.12}$$

Since each digital speech channel requires a continuous bit rate of r_{sp} bps, the number of speech channels that can be carried by each earth station is given by n where

$$n = [T_{frame} - N(t_g + t_{pre})] \times \frac{R_b}{T_{frame} \times r_{sp}} \tag{6.13}$$

EXAMPLE 6.3.1 *TDMA in a Fixed Station Network*

A TDMA network of five earth stations shares a single transponder equally. The frame duration is 2.0 ms, the preamble time per station is 20 μs, and guard bands of 5 μs are used between bursts. Transmission bursts are QPSK at 30 Mbaud.

Calculate the number of 64 kbps voice channels that each TDMA earth station can transmit. If the earth stations send data rather than digital speech, what is the transmission rate of each earth station in Mbps? What is the efficiency of the TDMA system expressed as Efficiency = 100% × Message bits sent/Maximum possible number of bits that could be sent?

Using Eq. (6.11) we can find the data burst duration for each earth station, T_d, in microseconds

$$T_d = [2000 - 5 \times (5 + 20)]/5 = 375\ \mu\text{s}$$

A burst transmission rate of 30 Mbaud is 30 million symbols per second, and QPSK symbols carry 2 bits. Hence the transmitted bit rate in each burst is $R_b = 2 \times 30$ Mbps = 60 Mbps.

The capacity of each earth station in bits per second is C_b where

$$C_b = 375 \times 60 \times 10^6/2000 = 11.25 \text{ Mbps}$$

Since these bits are sent as 500 bursts each second, the number of message bits per burst is $11.25 \times 10^6/500 = 225{,}000$ kbits.

The number of 64 kbps digital speech channels that can be carried by one earth station is

$$n = 11{,}250{,}000/64{,}000 = 175(.781)$$

We have to discard the fractional channel since we can send only whole channels. The 0.781 fraction of a speech channel represents 50,000 bits per second that cannot be transmitted by each earth station, or 100 bits per burst. At a bit rate of 60 Mbps, 100 bits is equivalent to 1.67 μs, so the guard time per burst would increase from 5 to 6.67 μs when 175 speech channels are sent. ■

Scanned by CamScanner

It is always a good idea to check the answer to any problem against a reference value. If the earth stations transmitted without any guard times or preambles, the maximum number of 64-kbps speech channels that could be sent by each of the five earth stations using a transmission burst rate of 60 Mbps would be $n = R_b/(N \times r_s) = 60 \times 10^6/(5 \times 64 \times 10^3) = 187.5$. The calculated capacity per station of 175 channels is a little lower than the maximum number of 187 channels; the difference—12 channels in this case—is the number of speech channels lost by the need to include guard times and preambles in the TDMA frame structure.

If we send data rather than digital speech, each earth station can transmit 11.25 Mbps. Overhead accounts for the equivalent of 0.75 Mbps, leading to an efficiency of

$$\text{Efficiency} = 100\% \times 11.25/12.0 = 93.75\%$$

Example 6.3.1 shows that there are diminishing returns to be obtained by increasing the duration of the frame beyond 2.0 ms in this system. There is a 6.25% loss of potential data transmission time when the 2.0-ms frame length of Example 6.3.1 is used with the other parameters of this TDMA system. Doubling the frame length to 4.0 ms would reduce the loss to about 3%, but would add additional delay, and increase the complexity of the earth station equipment. In this case, a 2.0 ms frame period appears to be a good compromise between delay, complexity, and efficiency.

Scanned by CamScanner

Satellite Switched TDMA

One advantage that TDMA has when used with a baseband processing transponder is satellite switched TDMA. Instead of using a single antenna beam to maintain continuous communication with its entire coverage zone, the satellite has a number of narrow antenna beams that can be used sequentially to cover the zone. A narrow antenna beam has a higher gain than a broad beam, which increases the satellite EIRP and therefore increases the capacity of the downlink. Uplink signals received by the satellite are demodulated to recover the bit streams, which are structured as a sequence of packets addressed to different receiving earth stations. The satellite creates TDMA frames of data that contain packets addressed to specific earth stations, and switches its transmit beam to the direction of the receiving earth station as the packets are transmitted. Note that control of the TDMA network timing could now be on board the satellite, rather than at a master earth station.

In the above example, the VSAT earth station could transmit data to a baseband processing satellite using SCPC-FDMA to permit the use of a small antenna and low power transmitter. The satellite could then use satellite switched TDMA to send that data to multiple earth stations, creating a mesh VSAT network. It is difficult to create a mesh VSAT network using SCPC-FDMA. Baseband processors are considered in more detail in the next section.

ONBOARD PROCESSING

The discussion of multiple access so far has assumed the use of a bent pipe transponder, which simply amplifies a signal received from earth and retransmits it back to earth at a different frequency. The advantage of a bent pipe transponder is flexibility. The transponder can be used for any combination of signals that will fit within its bandwidth. The disadvantage of the bent pipe transponder is that it is not well suited to uplinks from small earth stations, especially uplinks operating in Ka band. Consider a link between a small transmitting earth station and a large hub station via a bent pipe GEO satellite transponder. There will usually be a small rain fade margin on the uplink from the transmitting station because of its low EIRP. When rain affects the uplink, the C/N ratio in the transponder will fall. The overall C/N ratio in the hub station receiver cannot be greater than the C/N ratio in the transponder, so the bit error rate at the hub station will increase quickly as rain affects the uplink. The only available solution is to use forward error correction

Scanned by CamScanner

coding on the link, which lowers the data throughput but is actually needed for less than 5% of the time.

The problem of uplink attenuation in rain is most severe for 30/20 GHz uplinks with small margins. Outages are likely to be frequent unless a large rain fade margin is included in the uplink power budget. *Onboard processing* or *a baseband processing transponder* can overcome this problem by separating the uplink and downlink signals and their C/N ratios. The baseband processing transponder can also have different modulation schemes on the uplink and downlink to improve spectral efficiency, and can dynamically apply forward error control to only those links affected by rain attenuation. All LEO satellites providing mobile telephone service use onboard processing, and Ka-band satellites providing Internet access to individual users also use onboard processing.

Baseband Processing Transponders

A baseband processing transponder has a receiver and transmitter similar to those found in an earth station. The received signal from the uplink is converted to an intermediate frequency and demodulated to recover the baseband signal, which is then processed and reassembled. The baseband signal is modulated onto a carrier at a downlink frequency and transmitted back to earth. The signals are invariably digital, although that is not a requirement of a baseband processing transponder. The advantage of this process is that uplink and downlink signal formats need not be the same, and that different forms of error correction can be applied to the uplink and downlink. The C/N ratios of the uplink and downlink are not tied together through the reciprocal formula (Eq. 6.10). If the C/N on the uplink is low, because of an uplink rain fade, for example, bit errors will be present in the recovered data in the transponder. The BER will depend only on the uplink C/N ratio. If the C/N on the downlink is high, as is usually the case for all star networks working with a large hub earth station, no additional bit errors will occur on the downlink.

Separation of the uplink and downlink signals allows different modulation methods to be used, as well as flexible error correction codes. In star networks, the C/N ratio of the uplink and downlink between the satellite and the hub station is usually high because of the large antenna gain and high transmit power of the hub station. The high C/N ratio can be traded for a high level modulation such as 16-QAM, which reduces the bandwidth required for the uplink and increases the spectral efficiency of the communication system. 16-QAM sends four bits per symbol, and requires only half the bandwidth of QPSK.

As an example, consider a system in which half rate forward error correction and QPSK is used on the uplink from a small earth terminal. For a message data rate of R_d bits per second, the transmitted bit rate will be $R_b = 2\,R_d$ bps. An RF bandwidth of $R_b/2 \times (1 + \alpha_{up}) = R_d(1 + \alpha_{up})$ Hz will be required on the uplink, where α_{up} is the roll-off parameter of the (assumed) RRC filter in the transmitter. On the downlink to the hub station, where the C/N ratio is high, 16-QAM can be used without forward error correction. The RF bandwidth required for the downlink will be $R_d/4 \times (1 + \alpha_{dn})$, where α_{dn} is the roll-off parameter of the RRC filter in the transponder transmitter section. If we assume the same roll-off parameter, α, in both the uplink and the downlink transmitters and receivers, the downlink requires only one-fourth of the uplink bandwidth to send the same number of bits. The fourfold reduction in downlink bandwidth represents a considerable improvement in the spectral efficiency of the satellite system.

Star networks with small uplink earth stations are widely used for VSAT systems and satellite links that carry Internet traffic. One hub station linked to an Internet Service Provider (ISP) can connect to hundreds of user earth stations located at the users' homes. This is a major growth area for Ka-band GEO satellites, a number of which are planned

Scanned by CamScanner

for launch in the 2002–2005 time frame. The user terminal is typically a 0.5- to 0.8-m antenna with a low power transmitter, 0.5–1 W output, that can send data to the satellite at rates up to 400 kbps. The uplink operates in the 30 GHz band with a small rain fade margin, resulting in low C/N at the transponder input and requiring the use of error correction on the uplink during rain fades. It may be possible to remove all or most of the error correction when the uplink is operating in clear air, allowing higher data speeds except during rain fades. Rain fading occurs for less than 5% of the time, and affects only a small number of users at any instant. Under most conditions, only a small number of users will suffer severe rain fading at the same time, so most of the links to the satellite will not need heavy error correction. This flexibility can increase the capacity of the satellite links by a factor of two relative to a bent pipe transponder, at the cost of considerably increased complexity in both the satellite and the user terminal.

Satellite Switched TDMA with Onboard Processing

Baseband processing is essential in satellites using satellite switched TDMA, because data packets must be routed to different antenna beams based on the address of the destination earth station. The data in such systems is always sent in packets which contain a header and a traffic section. The header contains the address of the originating station and the address of the destination earth station. When satellite switched TDMA is used, the transponder must extract the destination information and use it to select the correct downlink beam for that packet. The satellite is operating much like a router in a terrestrial data transmission system. Switched beam operation of an uplink from a small earth station is more difficult to achieve because it requires synchronization of the earth station transmit time with the satellite beam pointing sequence, in much the same way that a TDMA uplink operates. However, the uplink can operate in a small bandwidth which overcomes the chief disadvantage of classic TDMA—the requirement for high burst rate transmissions and high transmit power.

Satellite switched TDMA can greatly increase the throughput of a transponder. Consider, for example, a satellite providing Internet access to individual users in the United States. The uplink and downlink beams at the satellite must provide coverage over an area approximately 6° by 3°, as seen from the satellite. Antenna gain and beamwidth are related by the approximate relationship $G = 33{,}000/(\text{product of beamwidths in degrees})$. This limits the maximum achievable satellite antenna gain to approximately 32.5 dB.

A satellite with switched beam capability can have much narrower beams with higher gain than a satellite with a single fixed beam. The limitation on gain is the diameter of the antenna, which must fit inside the launch vehicle shroud. For launchers available in 2000, this limit is about 3.5 m. At 20 GHz, the uplink frequency for Ka band, an antenna with a circular aperture of diameter $D = 3.5$ m and aperture efficiency of $\eta_A = 65\%$ has a gain $G = \eta_A (\pi D/\lambda)^2 = 55.4$ dB, and its beamwidth is approximately 75 λ/D degrees $= 0.32°$. The corresponding downlink antenna for 30 GHz that has a beamwidth of 0.32° and a gain of 55.4 dB has a diameter of 2.33 m. The switched beam satellite has an antenna gain almost 23 dB higher than the single beam satellite, which can be traded directly for reduction in uplink or downlink transmit power, and uplink or downlink data rate. However, the satellite must generate at least 170 beams to cover all of the United States with 0.32° beams, with a consequent increase in satellite antenna complexity.

Satellite switched TDMA and multiple beam antennas are a feature of most of the proposed Ka-band Internet access satellites[13,14]. The Astrolink satellites, for example, have

Scanned by CamScanner

105 spot beams for links to small user terminals. The satellite uplink (30 GHz) antenna has a diameter of 2.5 m and the downlink antenna has a diameter of 3.25 m. There are five spot beams for links to hub stations; the large antennas used by the hub stations allow a lower gain antenna with a broader beam to be used on the satellite.

Coverage of the United States with multiple beams is not always provided uniformly. Differences in population densities and the frequency of heavy rainfall make it advantageous to provide more system capacity to metropolitan areas, and also to provide higher link margins to areas with more frequent heavy rainfall, such as Florida and the southeastern states. In the most sophisticated of large GEO satellites, a steerable phased array antenna can be used, with control of beam pointing from the ground via the satellite's telemetry and command link. The antenna beams can then be moved to provide coverage of areas with highest demand for traffic. The growth of the terrestrial optical fiber network will eventually fulfill the need for high-speed access to the Internet. Where direct access to an ISP is available via optical fiber, the transmission rate is likely to be higher and the cost to the user is likely to be lower. As the fiber network spreads through metropolitan areas, an Internet access satellite can concentrate its service on less well populated and rural areas. A steerable beam antenna allows the geographical capacity of the satellite to be reconfigured throughout its lifetime.

Scanned by CamScanner

throughout its lifetime.

6.5 DEMAND ACCESS MULTIPLE ACCESS (DAMA)

Demand access can be used in any satellite communication link where traffic from an earth station is intermittent. An example is an LEO satellite system providing links to mobile telephones. Telephone voice users communicate at random times, for periods ranging from less than a minute to several minutes. As a percentage of total time, the use of an individual telephone may be as little as 1%. If each user were allocated a fixed channel, the utilization of the entire system might be as low as 1%, especially at night when demand for telephone channels is small. Demand access allows a satellite channel to be allocated to a user on demand, rather than continuously, which greatly increases the number of simultaneous users who can be served by the system. The two-way telephone channel may be a pair of frequency slots in a DA-SCPC system, a pair of time slots in a TDM or TDMA system, or any combination or FDMA, TDM, and TDMA. Most SCPC-FDMA systems use demand access to ensure that the available bandwidth in a transponder is used as fully as possible.

In the early days of satellite communication, the equipment required to allocate channels on demand, either in frequency or time, was large and expensive. The growth of cellular telephone systems has led to the development of low cost, highly integrated controllers and frequency synthesizers that make demand access feasible. Cellular telephone systems use demand access and techniques similar to those used by satellite systems in the allocation of channels to users. The major difference between a cellular system and a satellite system is that in a cellular system the controller is at the base station to which the user is connected by a single hop radio link. In a satellite communication system, there is always a two hop link via the satellite to a controller at the hub earth station. Controllers are not placed on the satellites largely because of the difficulties in determining which links are in use, and who will be charged for the connection. As a result, all connections pass through a controlling earth station that can determine whether to permit the requested connection to be made, and who should be charged. In international satellite communication systems issues such as *landing rights* require the owner of the system to ensure

that communication can take place only between users in preauthorized countries and zones. The presence of the signals from all destinations at a central earth station also allows security agencies the option of monitoring any traffic deemed to be contrary to the national interest.

Demand access systems require two different types of channel: a common signaling channel (CSC) and a communication channel. A user wishing to enter the communication network first calls the controlling earth station using the CSC, and the controller then allocates a pair of channels to that user. The CSC is usually operated in random access mode (see Section 6.6) because the demand for use of the CSC is relatively low, messages are short, and the CSC is therefore lightly loaded, a requirement for any DA link. Packet transmission techniques are widely used in demand access systems because of the need for addresses to determine the source and destination of signals. Section 6.7 discusses the design of packets for use in satellite communication systems.

Bent pipe transponders are often used in demand access mode, allowing any configuration of FDMA channels to be adopted. There seem to be few standards for demand access systems in the satellite communication industry, with each network using a different proprietary configuration. Figure 6.11 shows a typical 54 MHz bandwidth Ku band transponder frequency plan for the inbound channels of a VSAT network using frequency division multiple access with single channel per carrier and demand access (FDMA-SCPC-DA) on the inbound link. The individual outbound RF channels are 45 kHz wide, to accommodate the occupied bandwidth of 64-kbps bit streams transmitted using QPSK and RRC filters with $\alpha = 0.4$. A *guard band* of 15 kHz is allowed between each RF channel, so one RF channel requires a total bandwidth of 60 kHz. A 54 MHz bandwidth transponder can accommodate 900 of these 60 kHz channels, but it is unlikely that all are used at the same time. Many VSAT systems are power limited, preventing the full use of the transponder bandwidth, and the statistics of demand access systems ensure that the likelihood of all the channels being used at one time is small. Considerable backoff is required in a bent pipe transponder with large numbers of FDMA channels, as discussed earlier in this chapter.

The outbound link of this particular VSAT network is a continuous TDM bit stream transmitted through a separate transponder. A second transponder is used to allow for the differences in transponder gain needed for the inbound and outbound channels of the VSAT system. In VSAT systems, the inbound and outbound channels are usually symmetric, offering the same data rate in opposite directions. Internet access systems are often

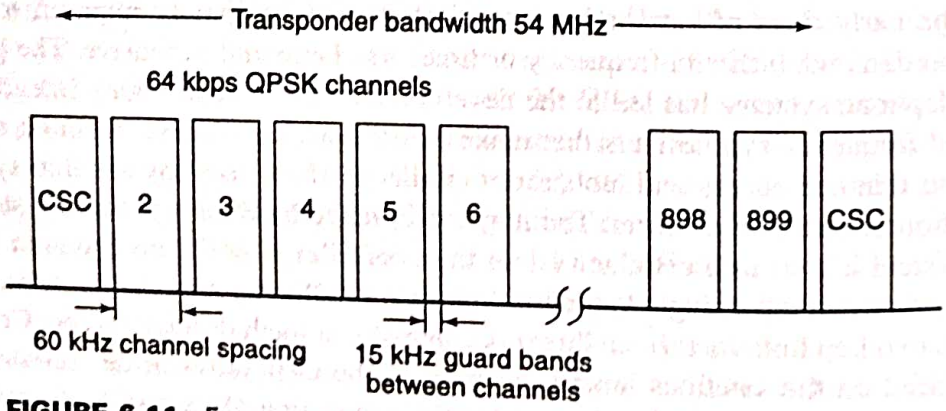

FIGURE 6.11 Frequency plan for a 54-MHz transponder carrying 900 demand access channels. Each channel has an occupied RF bandwidth of 45 kHz and carries one 64-kbps signal. Channel 1 and channel 900 are common signaling channels (CSC) used by the demand assignment system to set up access to the other 898 channels.

asymmetric, because requests for information can be short but the resulting replies may be lengthy. The packet length of the TDM signal in the outbound direction may be fixed, which suits a symmetrical network, or variable, which better suits an Internet channel capable of downloading large files or video from the Internet.

The common signaling channels (CSC) shown in the inbound transponder in Figure 6.11 are located at the ends of the transponder bandwidth. When a VSAT earth station wants to access the satellite, it transmits a *control packet* to the satellite on the CSC frequency and waits for a reply. The control packet is received by the hub earth station and decoded. The control packet contains the address of a terrestrial or satellite destination for the call, DA, the address of the station requesting the connection, RA, any other relevant data (such as a character, CP, to indicate that this is a control packet with no traffic data), and a cyclic redundancy check (CRC) that is used in the receiver to check for errors in the packet. The control station records both origination and destination station addresses and measures the duration of the connection in order to generate billing data. In a true demand access system, the control station allocates the VSAT an uplink frequency and a time slot of specified duration in the outbound TDM frame. If the hub station has a large volume of data to send to a particular VSAT station, it can allocate a longer time slot in the TDM frame to that station. This is important in Internet access systems where a large file of video or other multimedia data may have to be sent. The timeslots usually come in multiples of a fixed minimum duration so that clock rates and buffer sizes are compatible. If the system becomes busy and many stations are requesting large files, throughput to any one station will slow down toward the standard minimum rate, exactly as in a terrestrial Internet server.

The outbound link transmits a continuous bit stream so that receivers can maintain carrier phase and bit clock synchronization. The data is organized into a sequence of packets, addressed to the receiving stations, and organized into a frame. One frame contains one packet for each earth station, as illustrated in Figure 6.12. In many TDM systems there is always a time slot with addresses and other information for delivery of data to each earth station in the network, but there may be no data to send. In this case, the packet is assigned a special character to indicate no traffic.

Once an inbound frequency and an outbound time slot are allocated to the VSAT station, the connection can be completed and data transfer or voice communication can begin. The hub earth station designed to receive FDMA-SCPC signals has multiple receivers operating at different center frequencies and allocated to the many transponders on the satellite.

The block diagram of a receiver for one transponder with a bandwidth of 54 MHz is illustrated in Figure 6.13. The receiver amplifies and down-converts the received signal to an intermediate frequency of 700 MHz and then to a second IF at 70 MHz. Individual FDMA-SCPC channels within the band 43 to 97 MHz are down-converted to a standard IF frequency of 2 MHz in this example using local oscillators with frequencies 41 MHz through 95 MHz in steps of 60 kHz. There are a total of 900 such 2-MHz IF receivers to cover all the frequency slots in the transponder bandwidth.

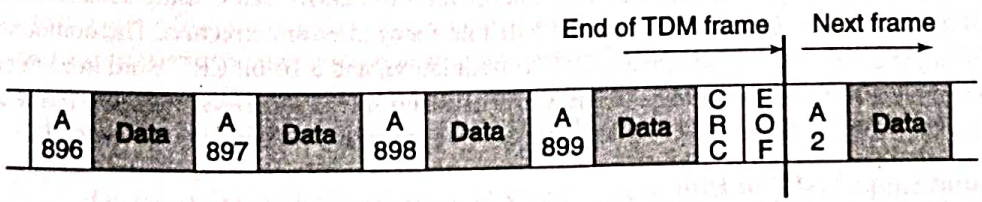

FIGURE 6.12 End of a TDM frame outbound to VSAT stations. A, station address; CRC, cyclic redundancy check; EOF, end of frame marker.

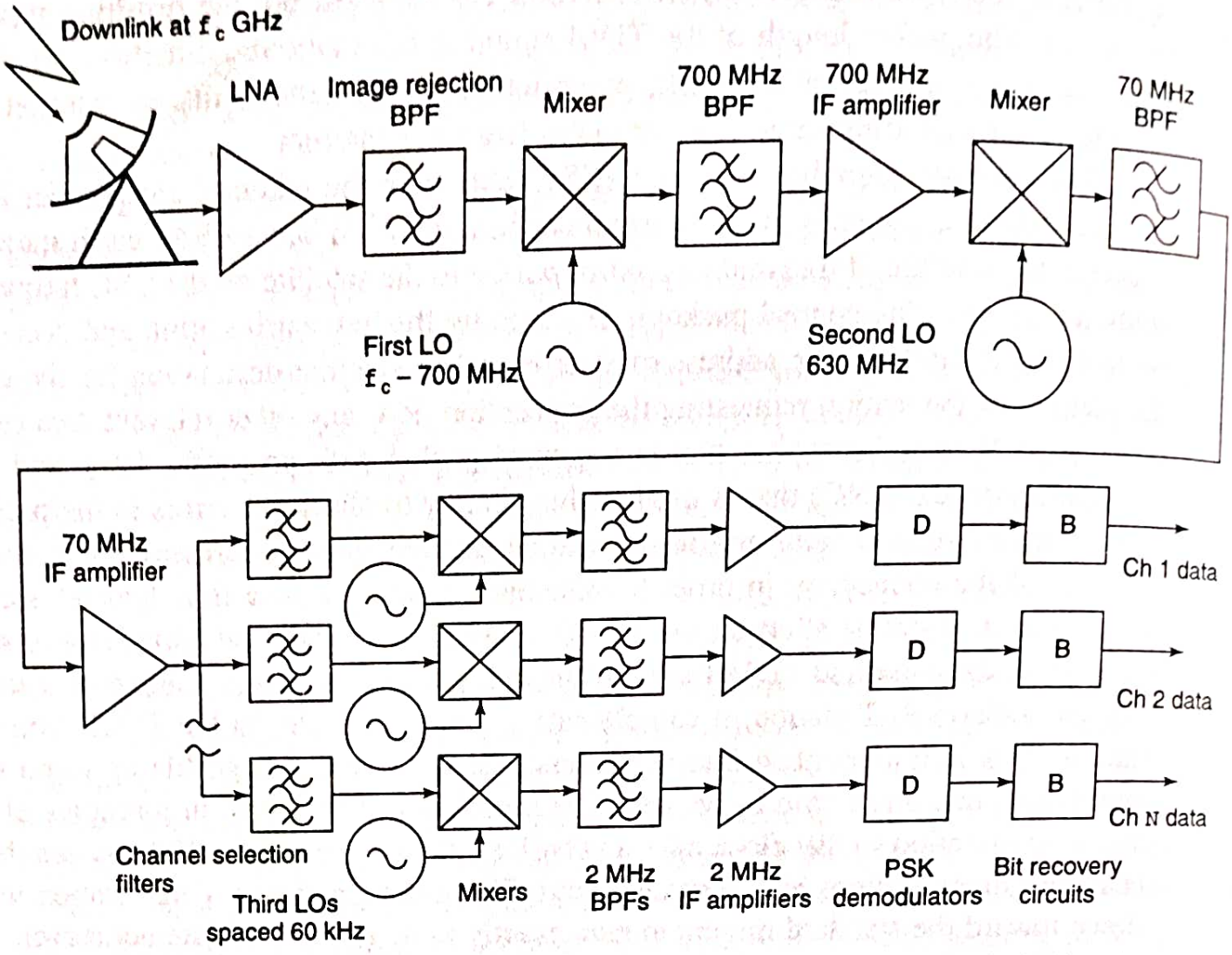

FIGURE 6.13 Receiver for FDMA-SCPC hub station. Channel selection is by bandpass filters in the 70 MHz IF section of the receiver and the third local oscillator. Each channel selection filter and third local oscillator is at a different frequency, spaced in 60 kHz increments across the IF band. D, demodulator; B, bit recovery circuit.

The hub earth station transmits a continuous TDM signal to all VSAT stations in the network. The symbol rate and the bandwidth of the TDM signal depends on the maximum bandwidth that the VSAT receiver can use, based on noise considerations. If the network is symmetrical and uses all 900 possible FDMA-SCPC channels at a bit rate of 64 kbps per channel, the TDM signal must have a bit rate of 900 × 64 kbps = 57.6 Mbps, ignoring packet overhead. This bit rate is likely to be much too high for a VSAT station, resulting in low C/N ratio in the receiver. The transponder can be partitioned to carry multiple groups of TDM signals with lower bit rates better suited to VSAT receivers.

6.8 CODE DIVISION MULTIPLE ACCESS (CDMA)

Code division multiple access is a scheme in which a number of users can occupy all of the transponder bandwidth all of the time. CDMA signals are encoded such that information from an individual transmitter can be recovered by a receiving station that knows the code being used, in the presence of all the other CDMA signals in the same bandwidth. This provides a decentralized satellite network, as only the pairs of earth stations that are communicating need to coordinate their transmissions. Subject to transponder power limitations and the practical constraints of the codes in use, stations with traffic can access a transponder on demand without coordinating their frequency (as in FDMA) or their time of transmission (as in TDMA) with any central authority. Each receiving station is allocated a CDMA code; any transmitting station that wants to send data to that earth station muat use the correct code. CDMA codes are typically 16 bits to many thousands of bits in length, and the bits of a CDMA code are called *chips* to distinguish them from the message bits of a data transmission. The CDMA chip sequence modulates the data bits of the original message, and the chip rate is always much greater than the data rate. This greatly increases the speed of the digital transmission, widening its spectrum in proportion to the length of the chip sequence. As a result, CDMA is also known as *spread spectrum*. *Direct sequence spread spectrum* (DS-SS) is the only type currently used in satellite communication; *frequency hopping* spread spectrum (FH-SS) is used in the Bluetooth system for multiple access in short range local area wireless networks[18].

CDMA was originally developed for military communication systems, where its purpose was to spread the energy of a data transmission across a wide bandwidth to make detection of the signal more difficult (called *low probability of intercept)*. Spreading the energy in a signal across a wide bandwidth can make the noise power spectral density (NPSD) in the receiver larger than the power spectral density (PSD) of the received signal. The signal is then said to be *buried in the noise*, a common feature of DS-SS signals,

Scanned by CamScanner

and the signal is much harder to detect than a signal with a PSD greater than the receiver's NPSD. The correlation process that recovers the original data bits from a DS-SS spread spectrum signal is also resistant to *jamming*, the deliberate transmission of a radio signal at the same frequency to blot out someone else's transmission. Both of these attributes are valuable in tactical military communication systems.

CDMA has become popular in cellular telephone systems where it is used to enhance cell capacity. However, it has not been widely adopted by satellite communication systems because it usually proves to be less efficient, in terms of capacity, than FDMA and TDMA. The Globalstar LEO satellite system was designed to use CDMA for multiple access by satellite telephones; the advantage of CDMA in this application is *soft handoff*. More details of the Globalstar system can be found with reference 4.

The GPS navigation system uses DS-SS CDMA for the transmission of signals that permit precise location of a receiver in three dimensions. Up to 12 GPS satellites could be visible to a receiver close to the earth's surface at any one time. CDMA is used to share a single RF channel in the receiver between all of the GPS satellite transmissions. Chapter 12 gives details of the GPS signal structure and describes the process of data recovery from the DS-SS satellite signals.

Spread Spectrum Transmission and Reception

This discussion of CDMA for satellite communications will be restricted to direct sequence systems, since that is the only form of spread spectrum that has been used by commercial satellite systems to date. The *spreading codes* used in DS-SS CDMA systems are designed to have good autocorrelation properties and low cross-correlation. Various codes have been developed specifically for this purpose, such as Gold and Kasami codes[1].

The DS-SS codes will all be treated as *pseudonoise* (PN) sequences in this discussion. Pseudonoise refers to the spectrum of code, which appears to be a random sequence of bits (or chips) with a flat, noiselike spectrum. The generation of a DS-SS signal is illustrated in Figure 6.16. We will begin by assuming that the system uses baseband signals. Most DS-SS systems generate spread spectrum signals using BPSK modulated versions of the data stream, but it is easier to see how a DS-SS system operates if the signals are first considered at baseband. In Figure 6.16, a bit stream containing traffic data at a rate

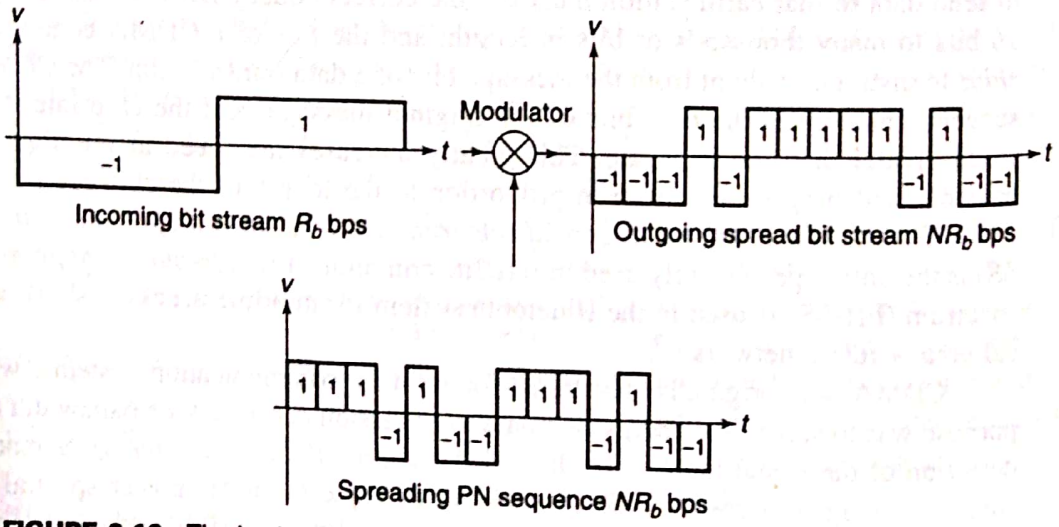

FIGURE 6.16 The basic principle of a direct sequence spread spectrum (CDMA) system. Each incoming message data bit is multiplied by the same PN sequence. In this example the message sequence is −1 +1 and the PN sequence is +1 +1 +1 −1 +1 −1 −1.

Scanned by CamScanner

R_b, converted to have levels of +1 and −1 V corresponding to the logical states 1 and 0, is multiplied by a PN sequence, also with levels +1 and −1 V, at a rate $M \times R_b$ chips per second. Each data bit results in the transmission of a complete PN sequence of length M chips.

In the example shown in Figure 6.16, the seven chip spreading code sequence is 1110100, which is converted to +1 +1 +1 −1 +1 −1 −1. The spreading sequence multiplies the data sequence 0 1, represented as −1 +1, leading to the transmitted sequence −1 −1 −1 +1 −1 +1 +1 +1 +1 +1 −1 +1 −1 −1 shown at the right in Figure 6.16. Recovery of the original data stream of bits from the DS-SS signal is achieved by multiplying the received signal by the same PN code that was used to generate it. The process is illustrated in Figures 6.17 and 6.18.

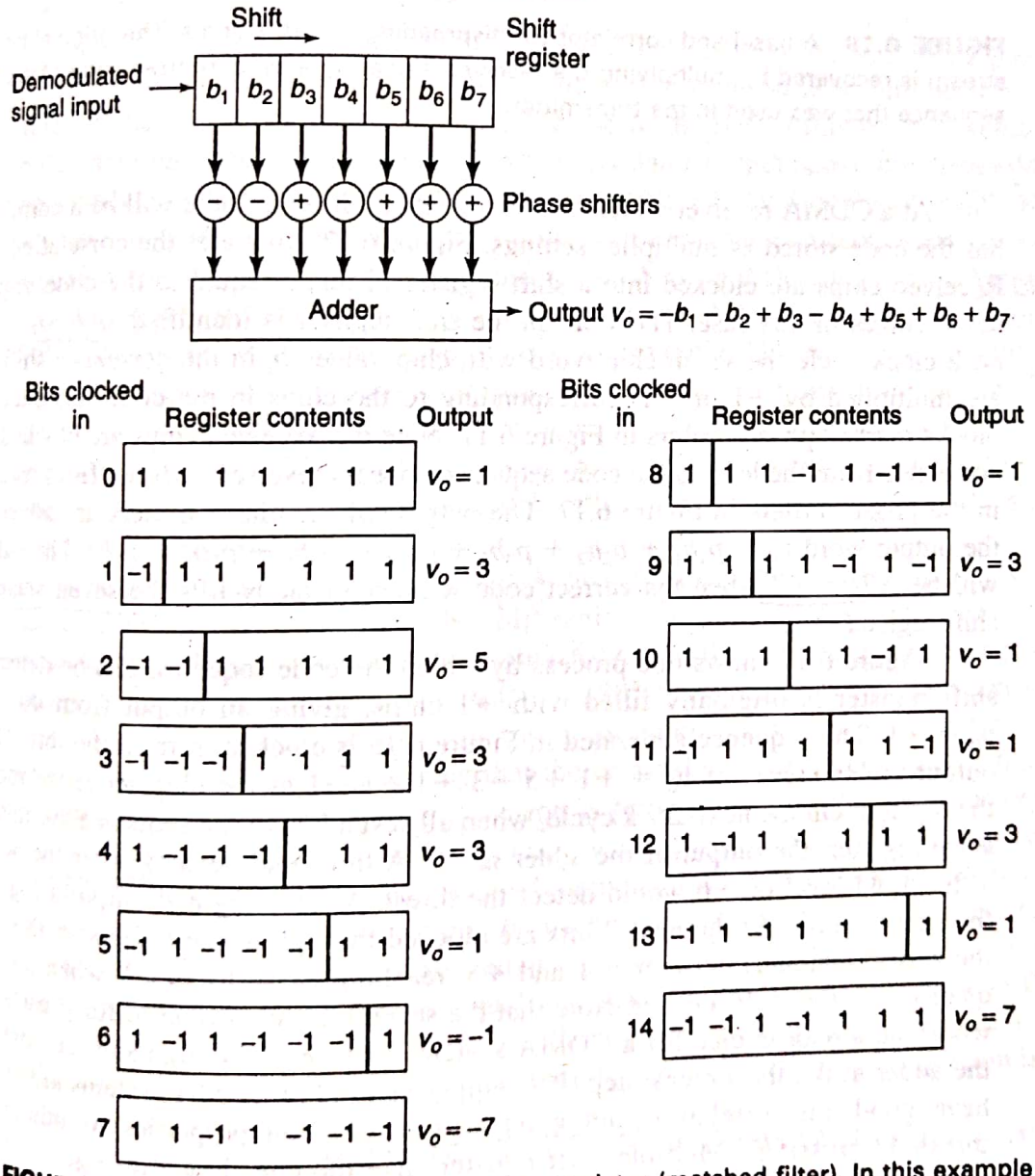

FIGURE 6.17 Data bit recovery using an IF correlator (matched filter). In this example the PN sequence is seven bits long for illustration. The CDMA chips from the receiver are clocked into the shift register serially and the shift register contents passed through phase shifters and added. The phase shifters convert −1 chips to +1 when the correct code is in the shift register such that all the voltages add to a maximum when the received sequence is correct. This figure shows the shift register contents and adder output for the chip sequence in Figure 6.16. Note that a high spurious output of 5 occurs at the third clock step, indicating that the seven bit sequence used here for illustration has poor autocorrelation properties.

Scanned by CamScanner

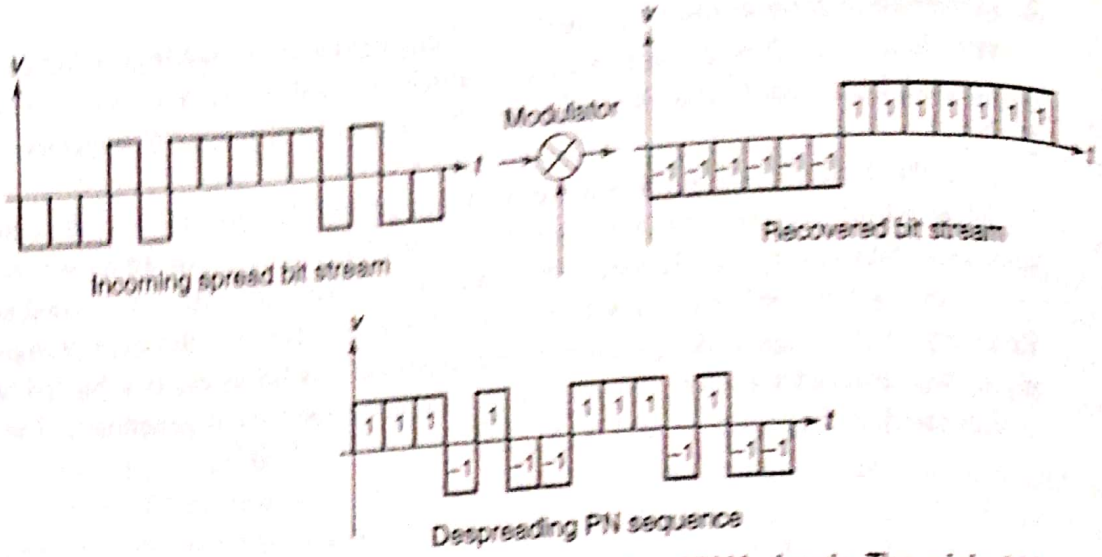

FIGURE 6.18 A baseband correlator for dispreading CDMA signals. The original bit stream is recovered by multiplying the received signal by a synchronized copy of the PN sequence that was used in the transmitter.

At a CDMA receiver which knows the seven bit code, there will be a correlator that has the code stored as multiplier settings. Figure 6.17 illustrates the correlation process. Received chips are clocked into a shift register of length equal to the code sequence—seven stages in this case. The word in the shift register is identified as $b_1\ b_2 \ldots b_7$. At each clock cycle the seven chip word with chip values b_i in the correlator shift register are multiplied by $+1$ or -1, corresponding to the chips in the code sequence, by the blocks marked phase shifters in Figure 6.17. Note that received chips are clocked into the correlator from the left, so the code sequence appears reversed (written from right to left) in the phase shifters in Figure 6.17. The outputs of the phase shifters are added to give the output word $v_0 = p_1b_1 + p_2b_2 + p_3b_3 + p_4b_4 + p_5b_5 + p_6b_6 + p_7b_7$. The value of v_0 will be $+7$ or -7 when the correct code sequence exactly fills the seven stages of the shift register.

Figure 6.17 shows one process by which the code sequence can be detected. The shift register is originally filled with $+1$ chips, giving an output from the adder of $v_0 = +1$. The sequence generated in Figure 6.16 is clocked in from the left. The adder output yields values of $v_0 = +1\ +5\ +3\ +3\ +1\ -1$ as the chip sequence moves into the register. On the next clock cycle, when all seven bits of the sequence are in the seven stage register, the output of the adder is -7. A threshold detector after the adder with a threshold level of -6 would detect the threshold crossing and output a logical 0 for the first data bit. As the next 7 bits are clocked through the shift register, the output of the adder fluctuates between -1 and $+5$, reaching $v_0 = +7$ or -7 when the code sequence fills the shift register. Note that the seven bit sequence used for illustration here would be a poor choice for a CDMA system because of the high spurious output from the adder at the third clock step. PN sequences used in CDMA systems are required to have good autocorrelation and good cross-correlation properties to minimize false threshold crossings. Multiple shift registers like the one shown in Figure 6.17 can be operated in parallel with each input delayed by an increment of one bit. If there are N shift registers, N possible code positions are tested at each chip clock cycle giving faster code acquisition.

When the code sequence is long, the multistage shift register detector shown in Figure 6.17 becomes unwieldy. Chip-by-chip multiplication is used instead. The multiplier has inputs b_i and p_i, where b_i is the received chip and p_i is a stored PN sequence chip.

Scanned by CamScanner

The output of the multiplier is then integrated over the duration of the code sequence to yield a value $+N$ or $-N$ where N is the number of chips in the PN sequence. The process is illustrated in Figure 6.18 for the seven chip code of Figure 6.16. The incoming signal at the left side of the figure is multiplied by the despreading code sequence to give the output at the right of the figure. In practice, a low pass filter is used instead of an integrator to avoid the need to synchronize discharge (dumping) of the integrator contents when a bit is detected. If the correct code is present in the input signal, the output of the multiplier is $+1$ or -1 as each chip is present in the multiplier. In a practical DS-SS CDMA system, there will be several other CDMA signals present at the correlator input as well as the wanted code. The integrated value of the multiplier output for cross-correlation of any other code with the stored code will yield a value $+1$ or -1 if the codes have ideal cross-correlation properties. Given a sufficiently large value for M (i.e., a long PN code sequence), it is possible to detect the bits of the wanted code in the presence of a large number of unwanted CDMA signals.

The seven chip code used to illustrate DS-SS code correlation is not a good code for a CDMA system. It exhibits poor autocorrelation because at one position in the shift register the adder output is $+5$, too close to the peak value of $+7$. Noise added to the incoming code could easily push the correlator output above the threshold causing a detected bit error. Ideally, we would like to have CDMA codes of length M chips that have autocorrelation values of $+1$ or -1 everywhere except when the code is aligned correctly, when the value should be M. When a different code is clocked into the shift register in Figure 6.17, the cross-correlation should be $+1$ or -1 on all clock cycles. Very few known codes have these ideal properties. There are Barker codes with sequence lengths up to 23 chips that meet these requirement, but practical DS-CDMA systems normally use longer codes with nonideal correlation properties. For example, GPS satellites use 1023 chip Gold codes for the C/A (course acquisition) code sequence that are built up from maximal length sequences which are easy to generate with a shift register.

Practical CDMA systems use BPSK waveforms and correlate the received signals at IF rather than baseband. The shift register shown in Figure 6.17 is typically a single stage multiplier, as shown in Figure 6.18, and the incoming signal and the PN sequence are BPSK waveforms with 0° or 180° phase shifts. Multiplication of two identical, cophased BPSK waveforms yields an output of $+1$. If the phase of the input waveform is reversed (indicating that the original data bit was a 0 rather than a 1) the output is -1. Coherent phase detection is required so that the IF waveforms can be added in phase, but the correlation principle is the same. The main difficulty in DS-SS CDMA receivers is that the received signal is buried in the noise, so the usual techniques for carrier recovery cannot be used. Baseband correlation is rarely used in DS-SS CDMA systems because the signals entering the correlator have C/N ratios less than 0 dB (*negative C/N*), so the signals always look like noise. A complete DS-SS receiver and correlator for the GPS C/A DS-SS signal is described in Chapter 12. The GPS C/A code sequence is 1023 chips in length, so chip-by-chip multiplication is used in the receiver.

The bandwidth occupied by the original data signal with bit rate R_b, if transmitted using BPSK and $\alpha = 0.4$ square root raised cosine (RRC) filters, would be $1.4\ R_b$ Hz. The spread spectrum signal occupies a bandwidth $M \times 1.4\ R_b$ Hz, and must be received through an IF RRC filter with a noise bandwidth of $M \times R_b$ Hz. Suppose that a BPSK receiver with the appropriate RRC filter with noise bandwidth R_b Hz receives the BPSK signal with C/N = 11 dB. If we do not change the power level of the original BPSK signal by the process of spreading it into a bandwidth of $1.4\ M\ R_b$ Hz, the C/N in the spread

Scanned by CamScanner

spectrum receiver will be $11 - 10 \log_{10} M$ dB. If M is large (e.g., 1023 as in the GPS C/A code) the CDMA signal will have a C/N ratio in the receiver much less than 0 dB; −19.1 dB for the GPS C/A signal example. The despreading process using a correlator to recover the original signal adds a *processing gain* equal to the numerical value M to the $(C/N)_{SS}$ ratio of the received spread spectrum signal. Hence the signal-to-noise $(S/N)_{out}$ ratio in the spread spectrum receiver after the correlator is given by

$$(S/N)_{out} = (C/N)_{SS} + 10 \log_{10} M \tag{6.14}$$

This S/N ratio must be sufficiently high for the receiver to recover the bits of the transmitted signal with a reasonable bit error rate. For example, if a BER no larger than 10^{-6} is required, $(S/N)_{out}$ must be greater than 11.0 dB, allowing a 0.4-dB implementation margin with no forward error correction.

Scanned by CamScanner