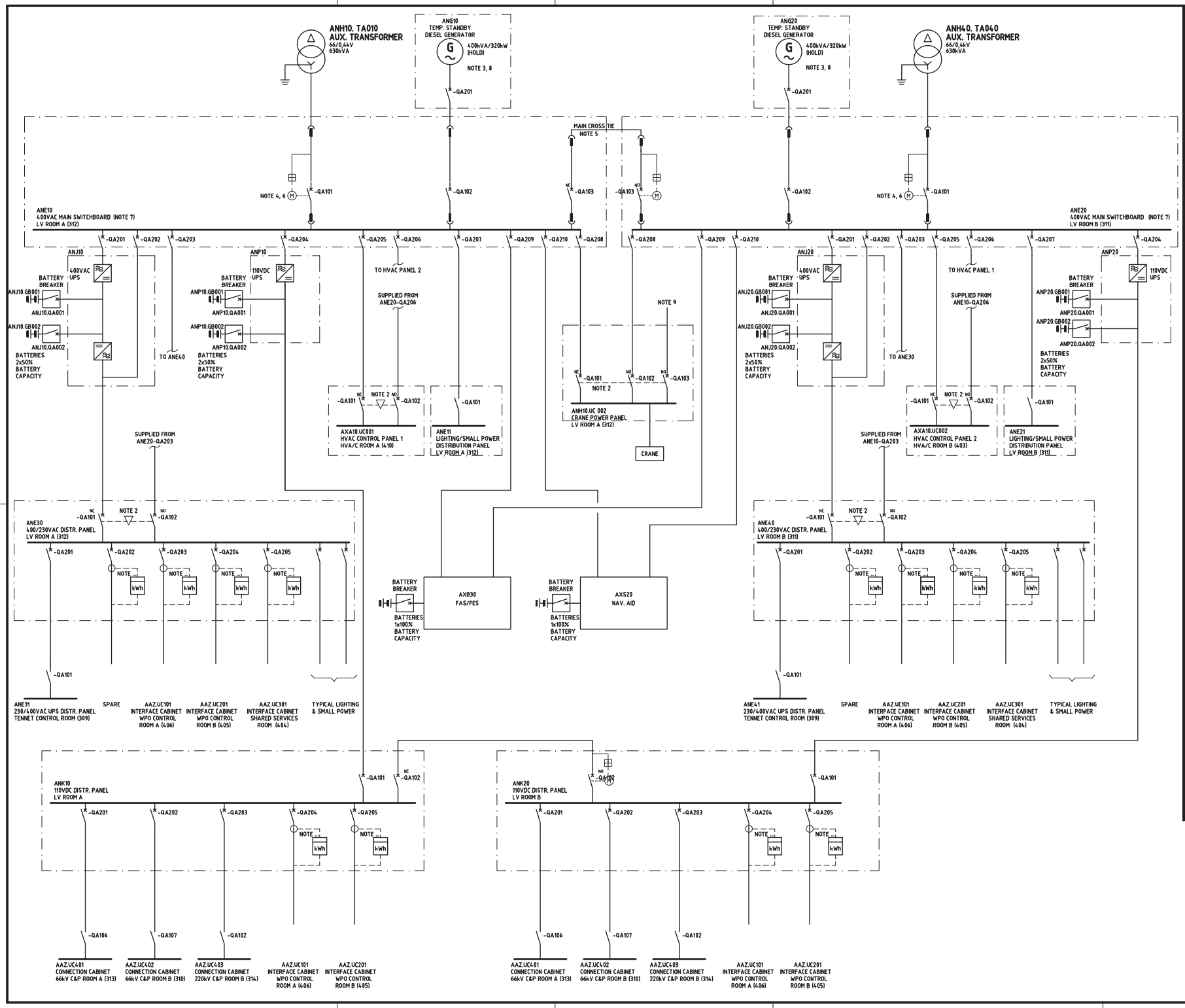

NOTES

1. DIGITS BESIDE BREAKERS INDICATES THE ACTUAL CIRCUIT NUMBER.
2. ONLY 1 OF THE INCOMERS CAN BE CLOSED AT THE SAME TIME AND NO TRIP ON THE INCOMING FEEDERS DUE TO SHORT CIRCUIT.
3. START POINT OF GENERATOR TO BE EARTHED.
4. ONLY SWITCH WHEN VOLTAGE ON INCOMING SIDE OF BREAKER IS AVAILABLE.
5. THE CROSS TIE CAN ONLY BE CLOSED WHEN ONE OF THE MAIN SWITCHBOARDS HAS NO VOLTAGE, OR WITH SYNCHRONISED GENERATOR SUPPLY TO EACH MAIN SWITCHBOARD AND NO TRIP ON THE INCOMING FEEDERS DUE TO SHORT CIRCUIT.
6. MID METERS ON AUX TRANSFORMER INCOMERS.
7. SECTIONAL SWITCHBOARD.
8. GENERATORS CAN SYNC TO GRID, GENERATORS CAN BE USED IN SYNCHRONOUS MODE (LOAD SHARING)
   THIS WILL BE A REMOTE MANUAL ACTION VIA AUX SCADA.
9. CRANE TO BE SUPPLIED FROM SUPPLY VESSEL DURING BLACK START OPERATION.

LEGEND

- CONVERTER (CHARGER)
- INVERTER
- BATTERIES
- DISCONNECTOR
- MOLDED CASE CIRCUIT BREAKER / MINIATURE CIRCUIT BREAKER
- METERING FOR SPECIFIC EQUIPMENT
- TRANSFORMER

NC = NORMALLY CLOSED
NO = NORMALLY OPEN

REFERENCE DOCUMENTS