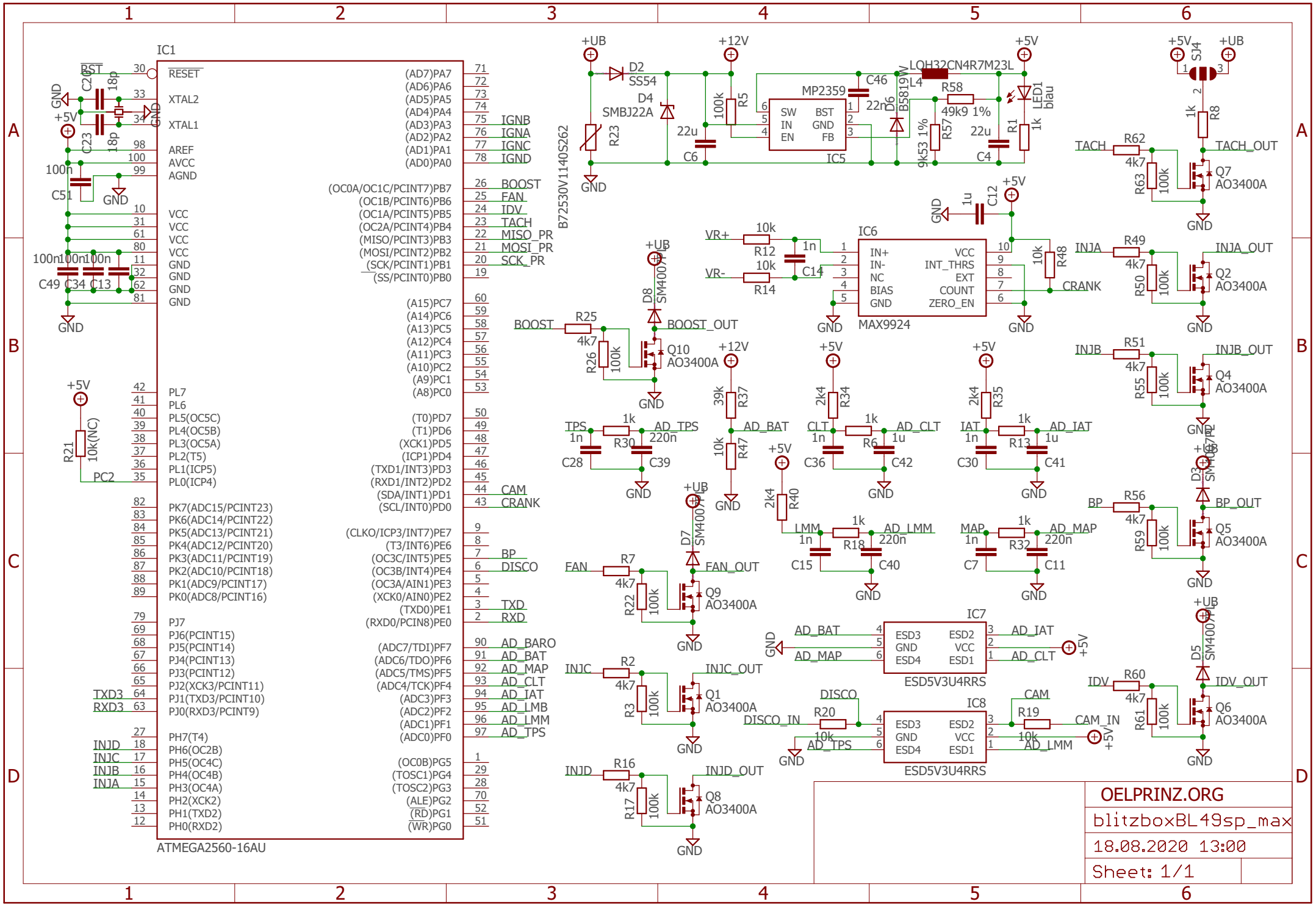
IC1
ATMEGA2560-16AU
RESET
XTAL2
XTAL1
AREF
AVCC
AGND
VCC
GND
PL7
PL6
PL5(OC5C)
PL4(OC5B)
PL3(OC5A)
PL2(T5)
PL1(ICP5)
PL0(ICP4)
PK7(ADC15/PCINT23)
PK6(ADC14/PCINT22)
PK5(ADC13/PCINT21)
PK4(ADC12/PCINT20)
PK3(ADC11/PCINT19)
PK2(ADC10/PCINT18)
PK1(ADC9/PCINT17)
PK0(ADC8/PCINT16)
PJ7
PJ6(PCINT15)
PJ5(PCINT14)
PJ4(PCINT13)
PJ3(PCINT12)
PJ2(XCK3/PCINT11)
PJ1(TXD3/PCINT10)
PJ0(RXD3/PCINT9)
PH7(T4)
PH6(OC2B)
PH5(OC4C)
PH4(OC4B)
PH3(OC4A)
PH2(XCK2)
PH1(TXD2)
PH0(RXD2)
(AD7)PA7
(AD6)PA6
(AD5)PA5
(AD4)PA4
(AD3)PA3
(AD2)PA2
(AD1)PA1
(AD0)PA0
(OC0A/OC1C/PCINT7)PB7
(OC1B/PCINT6)PB6
(OC1A/PCINT5)PB5
(OC2A/PCINT4)PB4
(MISO/PCINT3)PB3
(MOSI/PCINT2)PB2
(SCK/PCINT1)PB1
(SS/PCINT0)PB0
(A15)PC7
(A14)PC6
(A13)PC5
(A12)PC4
(A11)PC3
(A10)PC2
(A9)PC1
(A8)PC0
(T0)PD7
(T1)PD6
(XCK1)PD5
(ICP1)PD4
(TXD1/INT3)PD3
(RXD1/INT2)PD2
(SDA/INT1)PD1
(SCL/INT0)PD0
(CLKO/ICP3/INT7)PE7
(T3/INT6)PE6
(OC3C/INT5)PE5
(OC3B/INT4)PE4
(OC3A/AIN1)PE3
(XCK0/AIN0)PE2
(TXD0)PE1
(RXD0/PCIN8)PE0
(ADC7/TDI)PF7
(ADC6/TDO)PF6
(ADC5/TMS)PF5
(ADC4/TCK)PF4
(ADC3)PF3
(ADC2)PF2
(ADC1)PF1
(ADC0)PF0
(OC0B)PG5
(TOSC1)PG4
(TOSC2)PG3
(ALE)PG2
(RD)PG1
(WR)PG0
IGNB
IGNA
IGNC
IGND
BOOST
FAN
IDV
TACH
MISO_PR
MOSI_PR
SCK_PR
CAM
CRANK
BP
DISCO
TXD
RXD
AD_BARO
AD_BAT
AD_MAP
AD_CLT
AD_IAT
AD_LMB
AD_LMM
AD_TPS
TXD3
RXD3
INJD
INJC
INJB
INJA
RST
PC2
+UB
+12V
+5V
D2
SS54
D4
SMBJ22A
B72530V1140S262
MP2359
SW
IN
EN
BST
GND
FB
IC5
LQH32CN4R7M23L
L4
B5819W
D6
LED1
blau
SJ4
IC6
MAX9924
IN+
IN-
NC
BIAS
GND
VCC
INT_THRS
EXT
COUNT
ZERO_EN
VR+
VR-
IC7
ESD5V3U4RRS
IC8
ESD5V3U4RRS
ESD3
ESD2
ESD4
ESD1
DISCO_IN
AD_TPS
AD_MAP
AD_BAT
AD_IAT
AD_CLT
AD_LMM
CAM_IN
Q7
Q2
Q4
Q5
Q6
Q8
Q9
Q10
Q1
AO3400A
SM4007
D3
D5
D7
D8
OELPRINZ.ORG
blitzboxBL49sp_max
18.08.2020 13:00
Sheet: 1/1

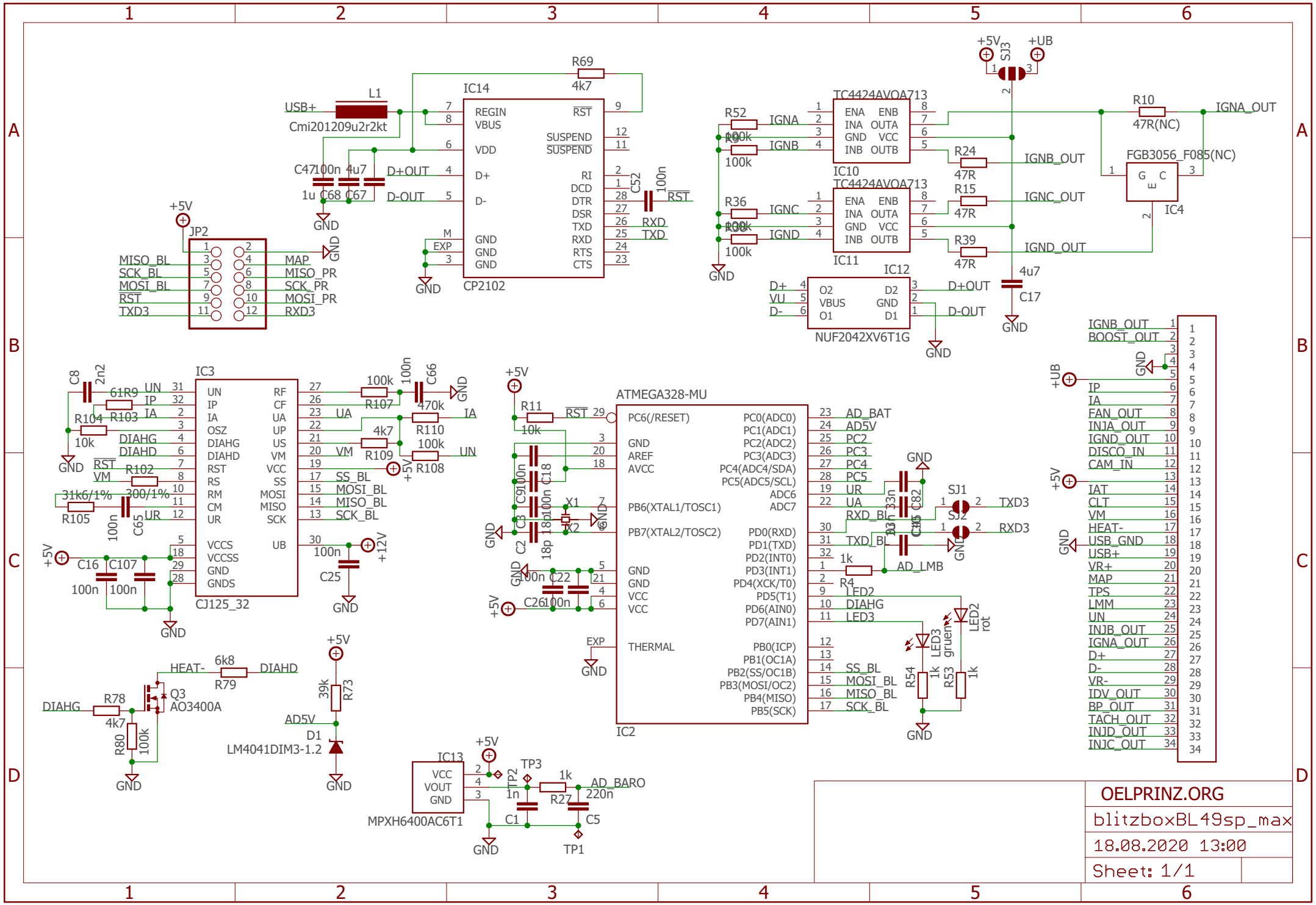
IC14
CP2102
REGIN
VBUS
VDD
D+
D-
GND
GND
GND
RST
SUSPEND
SUSPEND
RI
DCD
DTR
DSR
TXD
RXD
RTS
CTS
EXP
R69
4k7
L1
Cmi201209u2r2kt
USB+
C47 100n
4u7
1u C68
C67
D+OUT
D-OUT
C52 100n
RST
RXD
TXD
JP2
MISO_BL
SCK_BL
MOSI_BL
RST
TXD3
MAP
MISO_PR
SCK_PR
MOSI_PR
RXD3
IC10
TC4424AVOA713
IC11
TC4424AVOA713
ENA
INA
GND
INB
ENB
OUTA
VCC
OUTB
R52
100k
R36
100k
IGNA
IGNB
IGNC
IGND
R24
47R
R15
47R
R39
47R
IGNB_OUT
IGNC_OUT
IGND_OUT
R10
47R(NC)
IGNA_OUT
FGB3056_F085(NC)
IC4
SJ3
+5V
+UB
IC12
NUF2042XV6T1G
O2
VBUS
O1
D2
GND
D1
D+
VU
D-
D+OUT
D-OUT
4u7
C17
IC3
CJ125_32
UN
IP
IA
OSZ
DIAHG
DIAHD
RST
RS
RM
CM
UR
VCCS
VCCSS
GND
GNDS
RF
CF
UA
UP
US
VM
VCC
SS
MOSI
MISO
SCK
UB
C8 2n2
R103 61R9
R104 10k
R102 300/1%
R105 31k6/1%
C65 100n
C16 100n
C107 100n
R107 100k
C66 100n
R110 470k
R109 4k7
R108 100k
C25 100n
+12V
SS_BL
MOSI_BL
MISO_BL
SCK_BL
ATMEGA328-MU
IC2
PC6(/RESET)
GND
AREF
AVCC
PB6(XTAL1/TOSC1)
PB7(XTAL2/TOSC2)
GND
GND
VCC
VCC
THERMAL
PC0(ADC0)
PC1(ADC1)
PC2(ADC2)
PC3(ADC3)
PC4(ADC4/SDA)
PC5(ADC5/SCL)
ADC6
ADC7
PD0(RXD)
PD1(TXD)
PD2(INT0)
PD3(INT1)
PD4(XCK/T0)
PD5(T1)
PD6(AIN0)
PD7(AIN1)
PB0(ICP)
PB1(OC1A)
PB2(SS/OC1B)
PB3(MOSI/OC2)
PB4(MISO)
PB5(SCK)
AD_BAT
AD5V
PC2
PC3
PC4
PC5
UR
UA
RXD_BL
TXD_BL
AD_LMB
LED2
DIAHG
LED3
SS_BL
MOSI_BL
MISO_BL
SCK_BL
R11 10k
RST
X1
X2
C3 18p
C2 18p
C91 100n
C18 100n
C22 100n
C26 100n
C82 33n
C15 33n
SJ1
SJ2
TXD3
RXD3
R4 1k
LED2 rot
LED3 gruen
R54 1k
R53 1k
IGNB_OUT
BOOST_OUT
IP
IA
FAN_OUT
INJA_OUT
IGND_OUT
DISCO_IN
CAM_IN
IAT
CLT
VM
HEAT-
USB_GND
USB+
VR+
MAP
TPS
LMM
UN
INJB_OUT
IGNA_OUT
D+
D-
VR-
IDV_OUT
BP_OUT
TACH_OUT
INJD_OUT
INJC_OUT
HEAT-
6k8
R79
DIAHD
DIAHG
R78 4k7
Q3
AO3400A
R80 100k
39k
R73
AD5V
D1
LM4041DIM3-1.2
IC13
MPXH6400AC6T1
VCC
VOUT
GND
TP2 1n
TP3
1k
R27
AD_BARO
220n
C5
C1
TP1
OELPRINZ.ORG
blitzboxBL49sp_max
18.08.2020 13:00
Sheet: 1/1