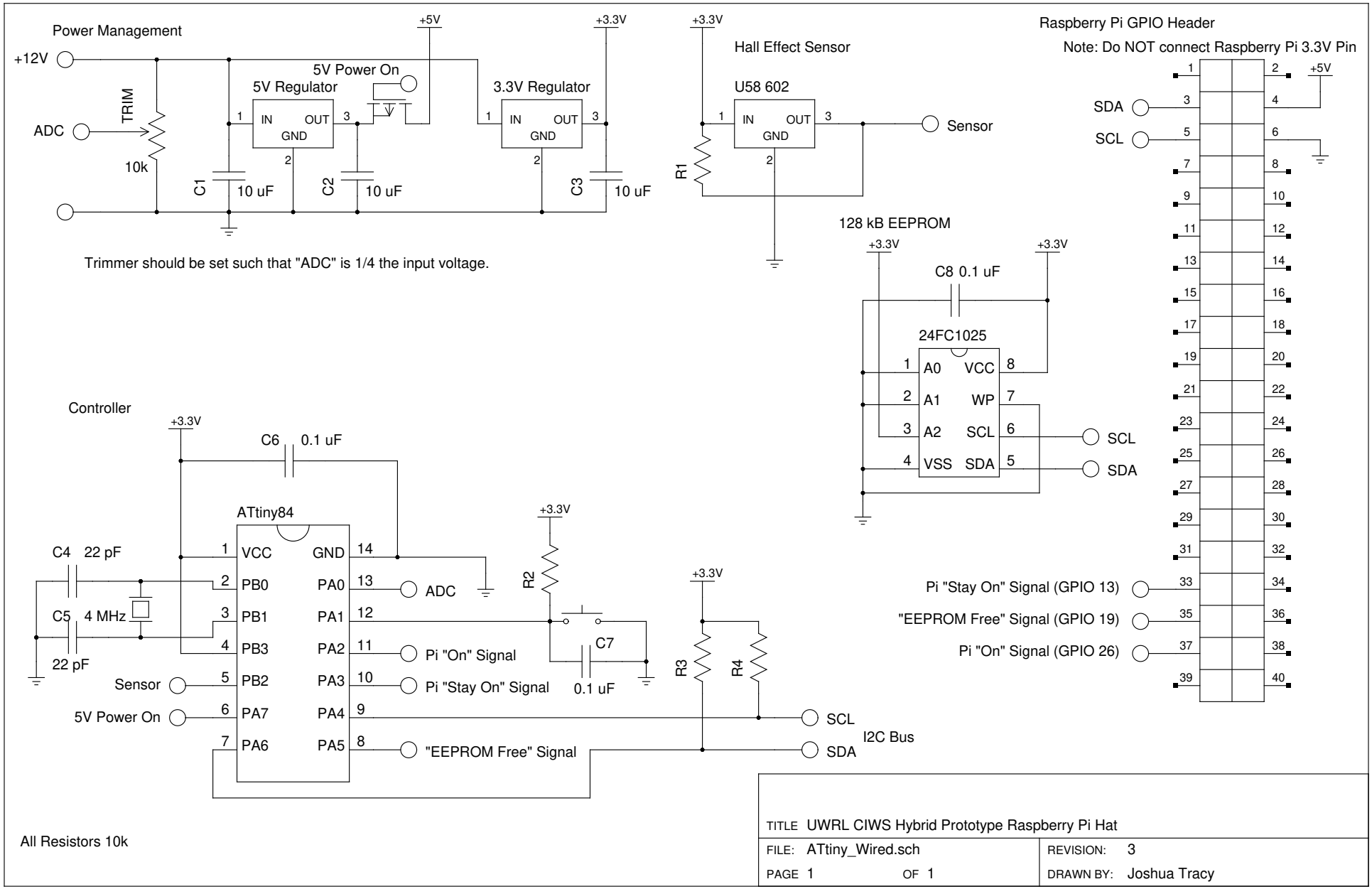

TITLE UWRL CIWS Hybrid Prototype Raspberry Pi Hat	
FILE: ATtiny_Wired.sch	REVISION: 3
PAGE 1 OF 1	DRAWN BY: Joshua Tracy