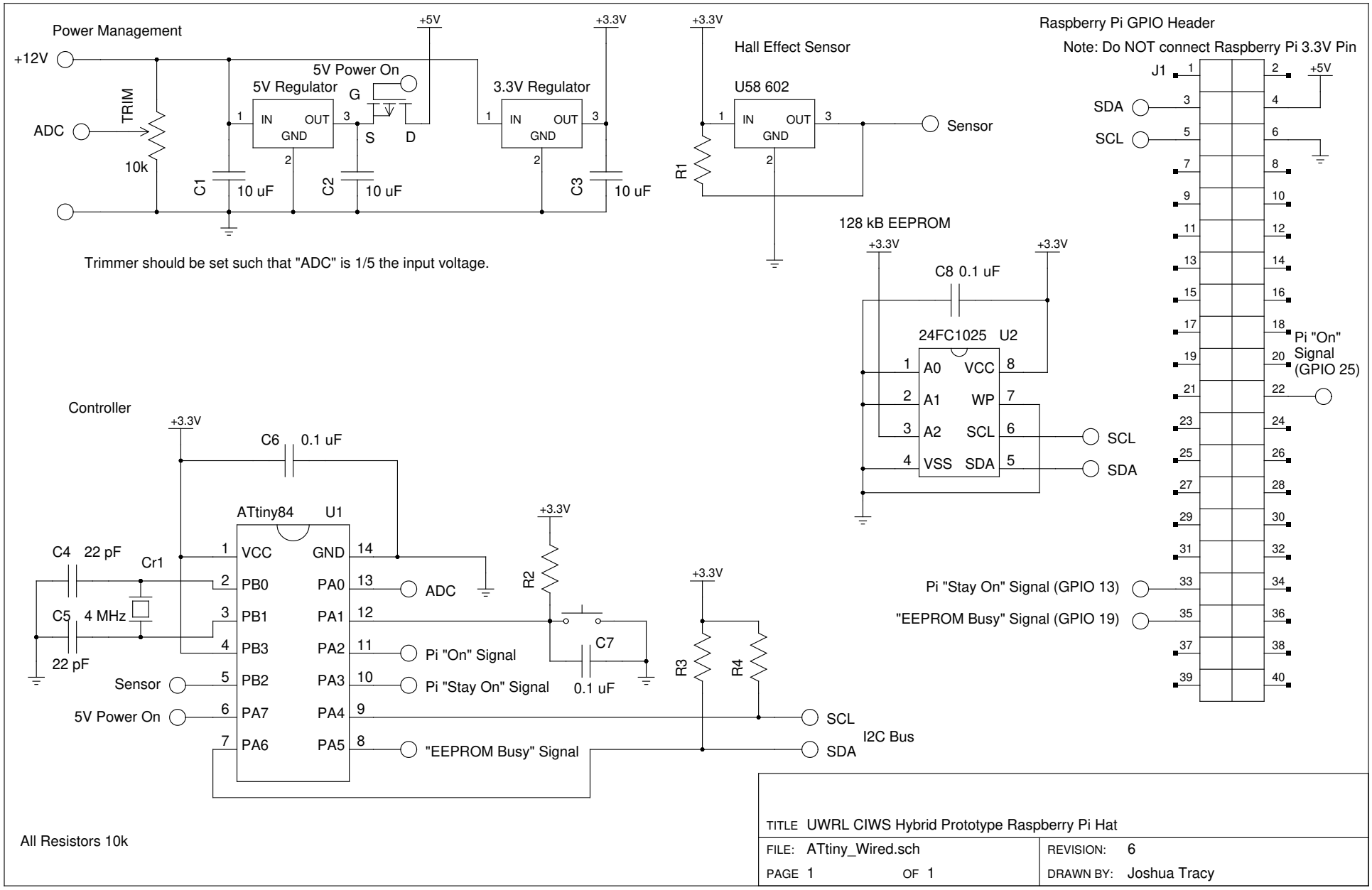

TITLE UWRL CIWS Hybrid Prototype Raspberry Pi Hat

FILE: ATtiny_Wired.sch

REVISION: 6

PAGE 1 OF 1

DRAWN BY: Joshua Tracy