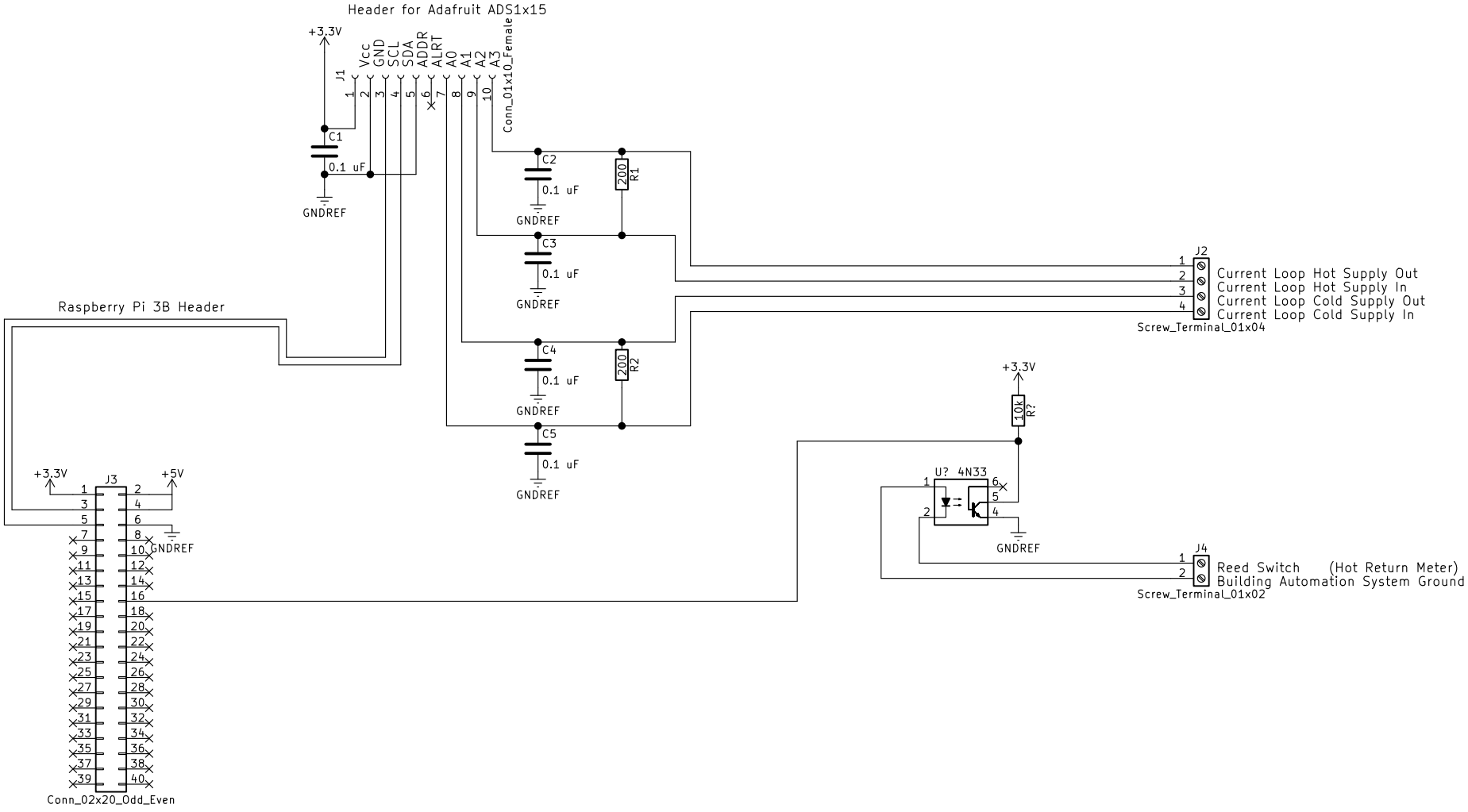

A "Hat" for the Raspberry Pi Embedded Computer, which allows the Raspberry Pi to read the 4 – 20 mA Current Loop outputs and pulsed output of USU Campus Residential Meters in the LLC Dorms. This version allows the Raspberry Pi to read data from the meters without interfering with the Building Automation System.

Sheet: /
File: CampusResidential.sch

Title: ***Campus Residential Integrateable Meter Hat***

Size: A4	Date:	**Rev:** 1
KiCad E.D.A. kicad 4.0.7		Id: 1/1