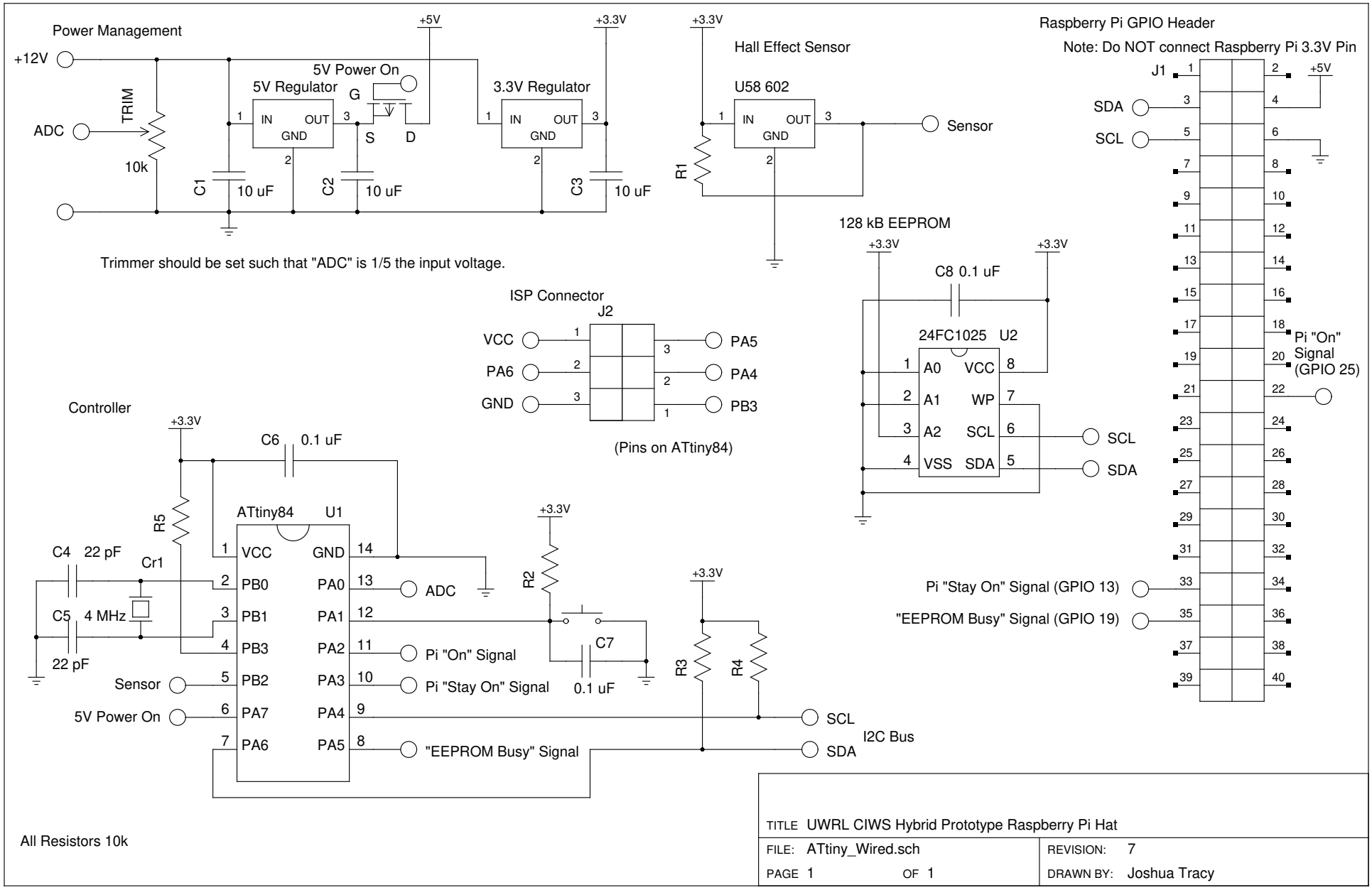
Power Management
+12V
ADC
TRIM
10k
5V Regulator
IN
OUT
GND
5V Power On
G
S
D
C1
10 uF
C2
10 uF
3.3V Regulator
C3
10 uF
+5V
+3.3V
Trimmer should be set such that "ADC" is 1/5 the input voltage.
Hall Effect Sensor
U58 602
R1
Sensor
Raspberry Pi GPIO Header
Note: Do NOT connect Raspberry Pi 3.3V Pin
J1
SDA
SCL
Pi "On" Signal (GPIO 25)
Pi "Stay On" Signal (GPIO 13)
"EEPROM Busy" Signal (GPIO 19)
128 kB EEPROM
C8 0.1 uF
24FC1025 U2
A0
A1
A2
VSS
VCC
WP
SCL
SDA
ISP Connector
J2
VCC
PA6
GND
PA5
PA4
PB3
(Pins on ATtiny84)
Controller
C6 0.1 uF
R5
ATtiny84 U1
VCC
PB0
PB1
PB3
PB2
PA7
PA6
GND
PA0
PA1
PA2
PA3
PA4
PA5
C4 22 pF
Cr1
C5 4 MHz
22 pF
Sensor
5V Power On
ADC
Pi "On" Signal
Pi "Stay On" Signal
"EEPROM Busy" Signal
R2
C7
0.1 uF
R3
R4
SCL
SDA
I2C Bus
All Resistors 10k
TITLE UWRL CIWS Hybrid Prototype Raspberry Pi Hat
FILE: ATtiny_Wired.sch
REVISION: 7
PAGE 1 OF 1
DRAWN BY: Joshua Tracy