SIR M. VISVESVARAYA INSTITUTE OF TECHNOLOGY

BENGALURU-562157

Department of Electronics and Communication Engineering

CERTIFICATE

Certified that the 8th Semester Internship titled **"Embedded System**" is a bonafide work carried out by **RISHABH SHARMA(1MV20EC096)** in partial fulfillment for the award of degree of Bachelor of Engineering in **Department of Electronics and Communication Engineering** of the Visvesvaraya Technological University, Belagavi, during the year 2022-23. The internship report has been approved as it satisfies the academic requirements with respect to the Internship work prescribed for Bachelor of Engineering Degree.

Signature of Guide	**Signature of HOD**	**Signature of Principal**
Name	**Name**	**Name**
Dr. Sashmita Mohapatra	Dr. Supriya V.G.	Prof. Rakesh S. G.
Professor	Professor & Head of Dept.	Principal
Dept. of ECE, Sir MVIT	Dept. of ECE, Sir MVIT	Dept. of ECE, Sir MVIT
Bengaluru-562157	Bengaluru-562157	Bengaluru-562157

External Viva

Name of the Examiners **Signature with Date**

1.

2.

ACKNOWLEDGEMENT

The joy and satisfaction that accompany the successful completion of any task would be incomplete without the blessings from the almighty and the people mentioned below who made it possible.

First and foremost, I offer my sincere phrases of thanks to **Prof. Rakesh S. G.,** Hon. Secretary, Sir MVIT, for providing help and support to carry out the internship.

I would like to express my gratitude to our **Principal, Prof. Rakesh S. G.** for providing me a congenial environment for engineering studies and also for having showed me the way to carry out this internship.

I consider it a privilege and honor to express my sincere thanks to **Dr. Supriya V.G.,** Professor and Head, Department of ECE for her support and invaluable guidance throughout the tenure of this internship.

I would like to thank my guide **Dr. Sashmita Mohapatra,** Professor, for the support, guidance, motivation, encouragement for the successful completion of this internship.

I would like to extend my gratitude to our internship coordinators **Mr. Chethan** for their support, encouragement and guidance during the entire internship.

I intend to thank all the teaching and non-teaching staffs of our Department of ECE for their immense help and co-operation.

Finally, I would like to express my gratitude to my parents and friends who always stood by me.

Rishabh Sharma

Subject Name/Code: Internship [18ECI85]

Semester: 8

COURSE OUTCOMES

At the end of Internship/ Professional Practice, Students will be able to:

CO1: Explore career alternatives prior to graduation.

CO2: Develop verbal and written communication skills, professional and interpersonal skills.

CO3: Acquire employment contacts leading directly to a full-time job following graduation from college.

CO4: Demonstrate effective management of personal behavior and practice ethical standards.

LIST OF TABLES

Table No.	Description	Page No.
4.1	Arduino UNO Pin Description	11
4.2	Arduino UNO Hardware Specification	12

LIST OF FIGURES

Fig No.	Description	Page No.
3.1	Block Diagram of Smart Parking system	7
4.1	Arduino UNO	10
4.2	IR Sensor	13
4.3	Servomotor	14
4.4	16X2 LCD Display	15
5.2	Flowchart	18
6.1.1	Activation Of Transmitters	19
6.1.2	When NO vehicles are present	20
6.1.3	When 1 slot is taken	20
6.1.4	When all slots are taken	21

CONTENTS

Description	Page. No.
Certificate	i
Acknowledgement	ii
Course Outcomes	iii
List of Figures	iv
Chapter 1: Company Profile	1
1.1 About the company	1
1.2 Service Provided	1
Chapter 2: Internship Details	2
2.1 Introduction	2
2.2 Problem Statement	4
2.3 Objective	4
2.4 Literature Survey	4
Chapter 3: Methodology	7
3.1 Block Diagram	7
3.2 Working Principle	8
3.3 Hardware Requirements	9
Chapter 4: Hardware Description	10
4.1 Arduino UNO	10
4.2 IR Sensor	12
4.3 Servo Motor	14
4.4 16×2 LCD display	15
Chapter 5: Software Description	16
5.1 Arduino Programming	16
5.2 Flowchart	18

Chapter 6: Results and Discussions 20

6.1 Results 20

6.2 Applications 21

6.3 Advantages 21

6.4 Disadvantages 21

6.5 Reflection Notes 22

Chapter 7: Conclusion and Future scope 23

7.1 Conclusion 23

7.2 Future Scope 23

References 24

CHAPTER 1

COMPANY PROFILE

Varcons Technologies Pvt Ltd
Communicate. Collaborate. Create

1.1 About the Company

Varcons Technologies is a leading provider of cutting-edge technologies and services, offering scalable solutions for businesses of all sizes. Founded by a group of friends who started by scribbling their ideas on a piece of paper, today we offer smart, innovative services to dozens of clients. They develop SaaS products, provide Corporate Seminars, Industrial trainings and much more.

Smart solutions are at the core of all that we do at VCT. Our main goal is to find smart ways of using technology that will help build a better tomorrow for everyone, everywhere. SaaS offers a variety of advantages over traditional software licensing models and We here at VCT tend to include the key features of SaaS in everything we build.

At VCT, they make sure every product/service that we offer is built keeping in mind the practical usability of the product/Service, they're a startup focused on Creativity and Customizability, and they also provide subscription models for Software that we have already built, Since the application is already configured, the user has a ready-to-use application. This not only reduces installation and configuration time but also cuts down the time wasted on potential glitches linked to software deployment.

1.2 Services Provided

1. Website as Software: They develop websites which behave and interact similar to Sophisticated Software.
2. Analytics and Research: They analyze the way customers interact the way with businesses by gathering, understanding and generating the report to make better market decisions.
3. Comprehensive Customer Support: With a comprehensive range of services. They offer a wide range of Products to customers in a manner in which they understand.
4. Smart Automation Tools: They create API's and tools that help automate any process with a host of features pertaining to the device.

CHAPTER 2

INTERNSHIP DETAILS

2.1 INTRODUCTION

Embedded system and its classification

An embedded system is a combination of computer hardware and software designed for a specific function. Embedded systems are used in different applications like automobiles, telecommunications, smart cards, missiles, satellites, computer networking and digital consumer electronics. Based on Performance it is divided into 3 types as follows:

- **Small Scale Embedded Systems:**

Small Scale Embedded Systems are designed using an 8-bit or 16-bit micro- controller. They can be powered by a battery. The processor uses very less/limited resources of memory and processing speed. Mainly these systems do not act as an independent system they act as any component of computer system but they did not compute and dedicated for a specific task.

- **Medium Scale Embedded Systems:**

Medium Scale Embedded Systems are designed using an 16-bit or 32-bit micro- controller. These medium Scale Embedded Systems are faster than that of small- Scale Embedded Systems. Java, C, C++ are the programming languages are used to develop medium scale embedded systems. Different type of software tools like compiler, debugger, simulator etc are used to develop these types of systems.

- **Sophisticated or Complex Embedded Systems:**

  Sophisticated or Complex Embedded Systems are designed using multiple32-bit or 64-bit micro-controller. These systems are developed to perform large scale complex functions. These systems have high hardware and software complexities. We use both hardware and software components to design final systems or hardware products.

OVERVIEW OF WORK

The internship mainly focuses on embedded system design, and sensor interfacing for application in home automation.

An automated car parking system is a process through which car parking can be done more efficiently and easily than manual method. The system will provide the user better services. The system counts the number of cars in the garage and checks if there's any vacancy. There's an entry and exit path. When vehicle enters, the display shows the number of cars inside. When any vehicle leaves, the count decreases and shown on display. If the garage is full. The display will show a message regarding that. This whole process includes the use of Arduino, Display and Sonar. The sonar detects whether the vehicle is entering or leaving. The report then showed on display.

The fundamental inspiration of this venture is to diminish the movement clog that happens in and around the urban zones which is brought on by vehicles looking for parking. In the daily papers, many articles with respect to the stopping issue all over India like Delhi, Mumbai, Chennai, Bangalore and numerous metropolitan urban areas. Developing populace has made numerous issues; stopping issue is one of the enormous issues in our everyday life.

In these modern days finding car parking is a big issue in congested cities. There are too many vehicles on the road but not enough parking spaces. One of the biggest problems is when we enter a parking area then we realize that there are no empty parking slots to park our cars. Another biggest problem is after entering in a big parking area we confused to find the empty parking slot to park our car. Sometimes maybe we all have been facing these two problems that wasted our important time. That's why we need efficient parking management systems in all parking areas that will provide confusion free and easy parking.

We will design "Smart car parking system project" to overcome this project helps the car's driver to park their car with minimum wastage of time with accurate information of the availability of the space to park.

2.2 PROBLEM STATEMENT

- In recent research in metropolitan cities the parking management problem can be viewed from several angles. High vehicle density on roads.
- This results in annoying issue for the drivers to park their vehicles as it is very difficult to find a parking slot. The drivers usually waste time and effort in finding parking space and end up parking their vehicles finding on streets.
- In worst case, people fail to find any parking space especially during peak hours and festive seasons.

2.3 OBJECTIVE

- Trouble to find Vacant Spaces, quickly finding an empty space during a multi-level parking garage is troublesome if not unthinkable, particularly on ends of the week or open occasions.
- Searching space to park the cars during weekends or open occasions can take over 10-15 minutes for around 66% of guests. Stadiums or shopping mall are swarmed at pinnacle periods, and trouble to find empty openings of these spots may be a noteworthy issue for clients.
- Inadequate car parking lot/ prompt activity blockage and drive disappointment. Our system solves all issue stated above.

2.4 LITERATURE SURVEY

[1] In the paper titled "Smart parking system using internet of things (IoT) technology," P. Nagendra describes a smart parking system based on IoT that allows users to locate available parking spots in real-time. The system uses sensors installed in parking spaces to detect the presence of vehicles and transmit the information to a centralized server. This data is then processed and made available to users through a mobile application, which they can use to find an available parking spot near their destination. The author discusses the benefits of this system, including improved traffic flow, reduced congestion, and increased convenience for drivers. The paper also highlights some of the challenges that need to be addressed for successful implementation of such systems, such as cost, interoperability, and privacy concerns. Overall, the paper presents a comprehensive overview of a smart parking system using IoT and its potential impact on urban transportation.

[2] The paper titled "Internet of Things: A Survey on Enabling Technologies, Protocols, and Applications" by Al-Fuqaha, Guizani, Mohammadi, Aledhari, and Ayyash is a comprehensive review of the Internet of Things (IoT) technology, its enabling technologies, protocols, and applications. The authors provide an overview of the IoT architecture and discuss various technologies that enable IoT such as RFID, NFC, ZigBee, and Bluetooth. The paper also covers

different protocols and communication technologies used in IoT such as MQTT, CoAP, and REST. The authors also provide a detailed review of various IoT applications in different domains such as healthcare, smart homes, and transportation. Overall, the paper presents a comprehensive survey of IoT technology and its potential applications and provides valuable insights into the emerging IoT ecosystem.

[3] In the paper titled "Design of Smart Parking System Based on IoT," Kim and Kim present a smart parking system that utilizes the Internet of Things (IoT) technology. The system is designed to address the problem of parking space shortages in urban areas by providing real-time information on parking availability to drivers. The authors propose a system architecture that consists of parking sensors, a cloud-based platform, and a mobile application for users. The parking sensors are installedin parking spaces and detect the presence of vehicles, which is then transmitted to the cloud platformthrough a wireless network. The cloud platform processes this information and provides real-time parking availability data to the mobile application, which can be used by drivers to find available parking spots near their destination. The paper provides a detailed description of the system architecture, including the design of the sensor network and the cloud-based platform. Overall, the paper presents an innovative solution to the problem of parking space shortages in urban areas and demonstrates the potential of IoT technology.

[4] The paper titled "Smart Parking System: A Review" by Khan and Hussain provides a comprehensive overview of the current state-of-the-art in smart parking systems. The authors review different approaches to smart parking systems, including sensor-based systems, camera-based systems, and machine learning-based systems. They also examine the different components of smart parking systems such as parking sensors, communication protocols, and data analytics techniques. The paper also covers the challenges faced in implementing smart parking systems, such as privacy concerns, interoperability issues, and system scalability. The authors provide an in-depth review of the existing literature on smart parking systems, which helps to identify the research gaps and future research directions. Overall, the paper provides a valuable resource for researchers and practitioners in the field of smart parking systems and highlights the potential impact of these systems on urban transportation.

[5] In the paper titled "A Survey on Smart Parking Systems Using IoT," Kalaivani and Radhakrishnan present a comprehensive survey of smart parking systems using IoT technology. The authors review the current state-of-the-art in smart parking systems and provide an overview of the architecture, components, and working principles of IoT-based smart parking systems. The paper also covers different types of sensors used in smart parking systems, such as ultrasonic sensors, infrared sensors, and magnetic sensors. The authors discuss the advantages and limitations of

different sensors and their suitability for different parking environments. The paper also reviews different communication protocols and data analytics techniques used in smart parking systems. The authors provide a detailed discussion of the challenges faced in implementing smart parking systems and potential solutions to overcome these challenges. Overall, the paper provides a valuable resource for researchers and practitioners in the field of smart parking systems and highlights the potential impact of these systems on urban transportation.

[6] The paper "Smart Parking System: A Review of the State-of-the-Art" by Masoud, Yasin, and Saad, published in the International Journal of Advanced Computer Science and Applications, provides a comprehensive review of the state-of-the-art in smart parking systems. The authors analyze various technologies, such as wireless sensor networks, image processing, and machine learning, used in smart parking systems. They also examine the challenges and opportunities in implementing these systems, such as privacy concerns and the need for efficient data management. The paper concludes with recommendations for future research in this area, including the use of cloud computing and the integration of smart parking systems with other smart city applications.

[7] The paper "Smart Parking System: A Review of Literature and Technologies" by Fouad, Zin, and Isa, presented at the 2018 IEEE International Conference on Innovative Research and Development, provides a comprehensive review of literature and technologies related to smart parking systems. The authors examine the evolution of smart parking systems, including their historical background and recent developments. They also analyze the technologies and components used in smart parking systems, such as sensors, communication protocols, and data analytics. Furthermore, the paper discusses the challenges and opportunities in implementing smart parking systems, such as the need for efficient parking space management and the potential for improving traffic flow in urban areas. The authors conclude with recommendations for future research in this field, emphasizing the importance of integrating smart parking systems with other smart city applications to achieve a more sustainable urban environment.

CHAPTER 3

METHODOLOGY

Methodology is a critical component of any research study, including the development of a smart parking system. In this chapter, the focus will be on the methodology employed to develop the system. The chapter will begin with an overview of the block diagram of the system, working principle and the hardware requirements of the system.

3.1 BLOCK DIAGRAM

Block Diagram of our proposed system is given below:

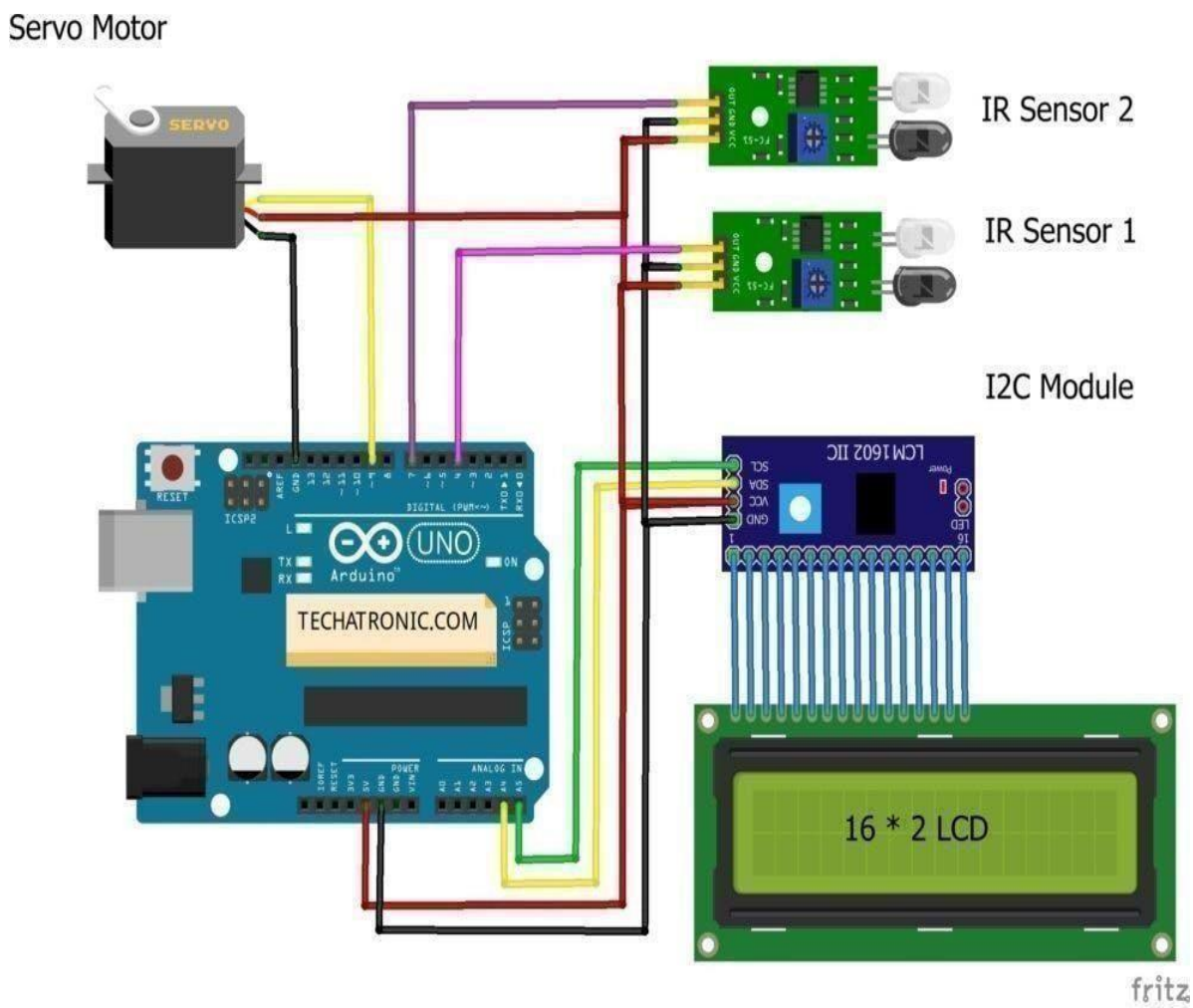

Fig 3.1: Block Diagram of Smart Parking System

3.2 WORKING PRINCIPLE

In the parking near us, the staff is present to manage the space and the entry-exit of the vehicles. But have you ever wondered what happens when humans are replaced by machines in the parking.

In this project, we are going to make an **automatic car parking system project** using **Arduino UNO**. For detecting the movement of vehicles, we are using IR sensors and to display the parking status we are using a 16×2 LCD.

Automatic Car Parking System Project Working:

- There are two parking slots in our project. If you want to increase the number of paring slots and modify the code accordingly.
- The system automatically detects whether the parking slot is empty or not. If the slot is empty in the **automated car parking** the new vehicles are allowed to enter else the entrance is blocked by the servo barrier in case the parking is full.
- The visitors can see the status for the availability of the free space outside the parking on a 16×2 LCD. They can also see on the LCD how many parking slots are free. The data keeps updating as the vehicles move in and out of the parking.
- Before starting, please check the address of the I2C module that you are using and modify the code accordingly.
- The visitors can see the status for the availability of the free space outside the parking on a 16×2 LCD. They can also see on the LCD how many parking slots are free. The data keeps updating as the vehicles move in and out of the parking.
- Before starting, please check the address of the I2C module that you are using and modify the code accordingly.
- Then connect the 5 volts pin of the Arduino with the VCC pin of the I2C module, the red wire of the servo motor, and the VCC pin of both the IR sensors.
- Join the SDA pin of the I2C module with the analog-4 pin of the Arduino and the SCL pin of the I2C module with the analog-5 pin of the Arduino in this **automatic car parking system project**.
- Connect the GND pin of the Arduino with the GND pin of the I2C module, the brown wire of the servo motor, and the GND pin of both the IR sensors. Attach the orange(signal) wire of the servo motor to the digital-9 pin of the Arduino.

- Now connect the pins of the I2C module with the pins of 16×2 LCD. You can check here the interfacing of 16×2 LCD with the I2C module. At last, connect the OUT pin of the first IR sensor with the digital-4 pin of the Arduino and the OUT pin of the second IR sensor with the digital-7 pin of the Arduino.

3.3 HARDWARE REQUIREMENTS

- Arduino Uno
- Two IR Sensors
- Servo motor
- Jumper wires and breadboard
- 16x2 LCD and I2C module
- USB cable for uploading the code

CHAPTER 4

HARDWARE DESCRIPTION

The hardware description of a smart parking system is a critical aspect of its development and implementation. This chapter describes the various hardware components that make up the smart parking system, including sensors, microcontrollers, and communication devices.

4.1 ARDUINO UNO

Arduino is a Microcontroller Development Board with ATmega328p Microcontroller works on 16 MHz, which helps to make the projects work. this was invented for the nontechnical persons who want to make theirsmall and basic projects with the help of technology. even Artists can also make art with the Arduino. it is likea brain that helps to automate **simple Arduino projects**. like if I want to make a 3d artist and I want to make the automatic movement in the art then I can do it with it and a stepper or servo motor.

Various types of Arduinos are:

- Arduino Uno
- Arduino Mega
- Arduino Nano
- Arduino Pico
- Arduino Due (84) MHz
- Arduino Leonardo

Fig. 4.1 : Arduino UNO

Arduino Hardware specification:

Arduino is an open-source development board with an Atmega328p microcontroller chip. which also can be programmed by the Keil Micro-Vision software

The required minimum voltage is 5v. having 14 Digital GPIO pins and 6 analog pins. 5v and 3.3v power pins with 3 ground pins onboard. Another SMD microcontroller inbuilt for boot the Arduino main chip. there is also two voltage regulator one is for 5v and another is for 3.3v. for SPI protocol there is MISO, MOSI, SCK, and SS pin which is pin 12, pin 11, pin 13 and pin 10 respectively. forI2C protocol there are SCL and SDA pins above the pin 13 & Vref. and you can also Interface the device with the serial communication by the pin Rx & Tx Which are given at pin 1 and pin 2. There are also some PWM pins on the board you can see all the detail in the given diagram.

Table 4.1: Arduino UNO pin descriptions

Pin Category	Pin Name	Details
Power	Vin, 3.3V, 5V, GND	Vin: Input voltage to Arduino when using an external power source. 5V: Regulated power supply used to power microcontroller and other components on the board. 3.3V: 3.3V supply generated by on-board voltage regulator. Maximum current draw is 50mA. GND: ground pins.
Reset	Reset	Resets the microcontroller.
Analog Pins	A0 – A5	Used to provide analog input in the range of 0-5V
Input/Output Pins	Digital Pins 0 - 13	Can be used as input or output pins.
Serial	0(Rx), 1(Tx)	Used to receive and transmit TTL serial data.
External Interrupts	2, 3	To trigger an interrupt.
PWM	3, 5, 6, 9, 11	Provides 8-bit PWM output.
SPI	10 (SS), 11 (MOSI), 12 (MISO) and 13 (SCK)	Used for SPI communication.
Inbuilt LED	13	To turn on the inbuilt LED.
TWI	A4 (SDA), A5 (SCA)	Used for TWI communication.
AREF	AREF	To provide reference voltage for input voltage.

Table 4.2: Arduino UNO hardware specification

Microcontroller	ATmega328P – 8 bit AVR family microcontroller
Operating Voltage	5V
Recommended Input Voltage	7-12V
Input Voltage Limits	6-20V
Analog Input Pins	6 (A0 – A5)
Digital I/O Pins	14 (Out of which 6 provide PWM output)
DC Current on I/O Pins	40 mA
DC Current on 3.3V Pin	50 mA
Flash Memory	32 KB (0.5 KB is used for Bootloader)
SRAM	2 KB
EEPROM	1 KB
Frequency (Clock Speed)	16 MHz

4.2 IR SENSOR

IR Sensor stands for Infrared Sensor.

- INFRARED, this term might be familiar with some people, but if you aren't. Then I may tell you that it is a type of light spectrum which is mostly used in transmission of data or better data transmission rate and wireless transmission. But here, or in this **Infrared sensor**, this is not used for transmission.
- In the IR sensor which is of course widely popular among electronic lovers and hobbyist is used as an **object detection sensor**.
- We can say that is it similar to Ultrasonic sensor but due to less range itis not as effective in distanceor object detection.
- **IR Sensor** is available in very different types and models also in various advanced feature.

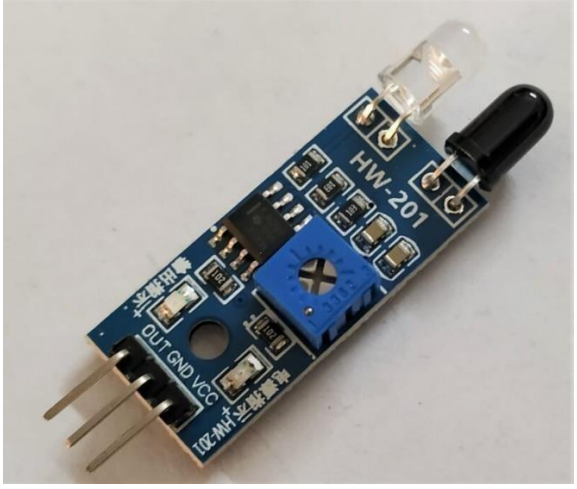

Fig 4.2: IR Sensor

IR Sensor Working

- The working of IR sensor seems to be easy but when it comes to types which I have mentioned in above text. Differs a little bit or one is directly opposite to other in terms of working of Inverting and Non-inverting comparator.
- In the above circuit diagram which I have attached, you can have the clear picture of the **circuit of the infrared sensor**. Due to not very effectiveness of analog value only digital value is taken into use.
- As soon as the power is delivered into the sensor, the IR LED which is connected to VCC with 100 Ω resistance in series start emitting IR light and can be received by the Photodiode.
- The inverting input is connected to 10KΩ potentiometer, which is used to adjust the voltage at the inverting input.
- The Non-inverting input is connected to the photodiode (with GND) and pulled up with 10 KΩ, which changes the voltage at the non-inverting input when IR light falls on the photodiode.
- The output of the comparator is connected to the D0 pin, which is pulled up with 10 KΩ.
- The switch LED is also connected to D0 pin, which indicated the obstacle onboard sensor.

4.3 SERVOMOTOR

Servo motors are used in every joint to perform precise angular movements. Today in the era of industry 4.0, we are using servo motors heavily, to meet the increasing demands of commercialization and industrialization. They are majorly used in sectors like:

1. In heavy Robotic Vehicles
2. In metal cutting and forming the machinery
3. In Antenna positioning etc.

- They are in general, **high efficiency and great precision** operational motors. They can easily turn to specified positions, using the positional feedback system discussed below.
- The servo arm maximum turn limit is 180 degrees and by connecting the servo with Arduino one can control the position of servo motors.
- A servo system is a closed-loop system where the feedback signal (output signal) in parameters like position, velocity, acceleration, etc. drives the motor. It converts the feedback electric signals to angular velocity or angular position.

Fig 4.3: Servomotor

4.4 16X2 LCD DISPLAY

- An LCD (Liquid Crystal Display) screen is an electronic display module and has a wide range of applications. It's having a Hitachi driver.
- 16×2 LCD display content 2 rows and 16 columns. where you can print 16 characters into one row. There are RW and RS pin. so, to **interface LCD with Arduino** you need to know some pin on the LCD.
- RS (Resistor selected, enables a user to select the instruction mode or the character mode)
- R/w (Read/write, enables a user to select the Read or Write mode)
- E (Enable, Enable driver to on the LCD)
- From D0 to D7 all pins are used for data transfer.

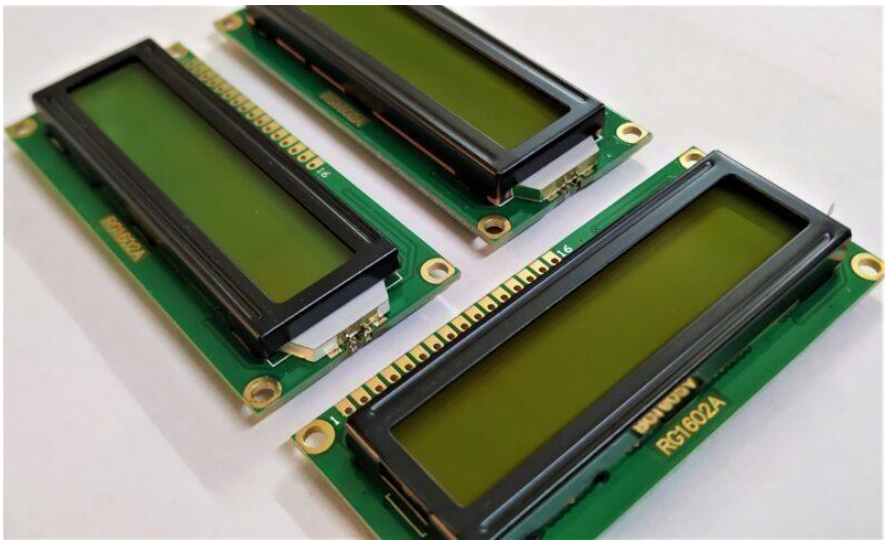

Fig 4.4: 16X2 LCD Display

LCD stands for liquid crystal display and there are crystals inside the display which illuminates the full display and the character as those which crystals are not illuminated. if you see the display carefully it works as reverse as other displays.

here the character is not illuminating they are inactive when we apply the signal to them. for example, if we are sending character A then the A-shaped crystal remains inactive, and the remaining crystal activates.

CHAPTER 5

SOFTWARE DESCRIPTION

The software component of the smart parking system is an integral part of the overall system. It provides the necessary functionality to manage the parking lot and enable users to locate and reserve available parking spaces. This chapter describes the software design and implementation of the smart parking system.

5.1 ARDUINO PROGRAMMING

Enter the Code here-

```
#include <Servo.h>
#include <Wire.h>
#include <LiquidCrystal.h> // Replace LiquidCrystal_I2C with LiquidCrystal

LiquidCrystal lcd(12, 11, 5, 4, 3, 2); // Initialize the LCD with the appropriate pins

Servo myservo;

#define ir_enter 2
#define ir_back  4

#define ir_car1 5
#define ir_car2 6
#define ir_car3 7
#define ir_car4 8

int S1 = 0, S2 = 0, S3 = 0, S4 = 0;
int flag1 = 0, flag2 = 0;
int slot = 6;

void setup() {
  Serial.begin(9600);
  // initialize digital pins as input.
  pinMode(ir_car1, INPUT);
  pinMode(ir_car2, INPUT);
  pinMode(ir_car3, INPUT);
  pinMode(ir_car4, INPUT);

  pinMode(ir_enter, INPUT);
  pinMode(ir_back, INPUT);

  myservo.attach(9); // Servo motor pin connected to D9
  myservo.write(90); // sets the servo at 0-degree position

  // Print text on display
  lcd.begin(16, 2); // Initialize the LCD with 16x2 character size
  lcd.setCursor(0, 0);
  lcd.print(" Smart Car Parking");
  lcd.setCursor(0, 1);
  lcd.print("    System    ");
```

```
  delay(2000);
  lcd.clear();

  Read_Sensor();

  int total = S1 + S2 + S3 + S4;
  slot = slot - total;
}

void loop() {
  Read_Sensor();

  lcd.setCursor(0, 0);
  lcd.print(" Slots: ");
  lcd.print(slot);
  lcd.print("  ");

  lcd.setCursor(0, 1);
  lcd.print("S1:");
  lcd.print(S1 == 1 ? "Full  " : "Empty ");
  lcd.print("S2:");
  lcd.print(S2 == 1 ? "Full  " : "Empty ");

  lcd.setCursor(0, 2);
  lcd.print("S3:");
  lcd.print(S3 == 1 ? "Full  " : "Empty ");
  lcd.print("S4:");
  lcd.print(S4 == 1 ? "Full  " : "Empty ");

  /* Servo Motor Control */
  if (digitalRead(ir_enter) == 0 && flag1 == 0) {
    if (slot > 0) {
      flag1 = 1;
      if (flag2 == 0) {
        myservo.write(180);
        slot = slot - 1;
      }
    } else {
      lcd.setCursor(0, 0);
      lcd.print("Parking Full “);
      delay(1500);
    }
  }

  if (digitalRead(ir_back) == 0 && flag2 == 0) {
    flag2 = 1;
    if (flag1 == 0) {
      myservo.write(180);
      slot = slot + 1;
    }
  }

  if (flag1 == 1 && flag2 == 1) {
    delay(1000);
    myservo.write(90);
    flag1 = 0, flag2 = 0;
  }
  delay(1);
```

```
}

void Read_Sensor() {
  S1 = 0, S2 = 0, S3 = 0, S4 = 0;
  if (digitalRead(ir_car1) == 0) { S1 = 1; }
  if (digitalRead(ir_car2) == 0) { S2 = 1; }
  if (digitalRead(ir_car3) == 0) { S3 = 1; }
  if (digitalRead(ir_car4) == 0) { S4 = 1; }
}
```

5.2 FLOWCHART

The flow chart includes how the system works. The program flowchart is given below:

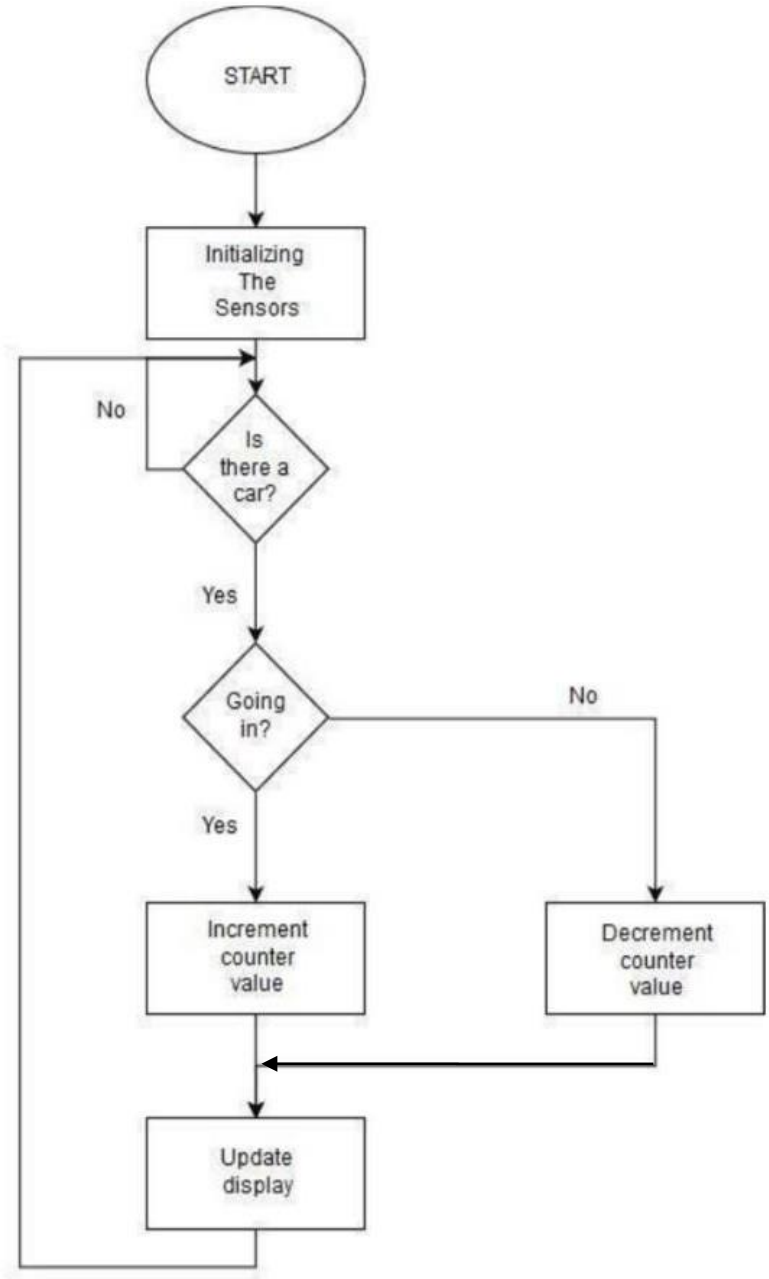

Fig 5.2: Flowchart

The flowchart represents the basic steps involved in a smart parking system. It starts with the detection of available parking spots using sensors. If a car is present then it checks if the car is going inside, if acar is going in then the counter increments the value by 1 and it displays the updated value. If the car is coming outside, then the counter value decrements by 1 and the updated result is displayed.

CHAPTER 6

RESULTS AND DISCUSSIONS

6.1 RESULTS

1. Improved Parking Efficiency-
    - Reduced Search: Embedded sensors and cameras can provide real-time information about available parking spaces, reducing the time drivers spend searching for a parking spot.
    - Optimal Space Utilization: The system can maximize the utilization of parking spaces by guiding vehicles to available spots, thus increasing the overall capacity of the parking facility.
2. Convenience for Drivers-
    - Reservation and Booking: Drivers can reserve parking spaces in advance through mobile apps or online platforms, ensuring they have a spot when they arrive at the facility.
    - Navigation Assistance: The system can provide tur-by-turn directions to the nearest available parking space, making the parking process easier and more convenient.
3. Enhanced Security-
    - Surveillance and Monitoring: Embedded cameras can monitor parking areas, improving security by recording incidents and deterring theft or vandalism.
    - Access Control: The system can control access to the parking facility, ensuring that only authorized vehicles can enter.
4. Environmental Benefits-
    - Reduced Emissions: By minimizing the time spent searching for parking, the system can help reduce vehicle emissions and contribute to a greener environment.
    - Energy Efficiency: Smart lighting and ventilation systems can be integrated to optimize energy consumption in the parking facility.
5. User Experience-
    - Customer Satisfaction: The convenience and efficiency of the smart parking system can enhance the overall experience for drivers, leading to higher customer satisfaction.
    - Reduced Stress: Drivers can avoid the stress and frustration of searching for parking, leading to a more positive experience.

6.2 APPLICATIONS

1) Office Buildings: Implementation of proposed system in Official Complexes will help the staff to park their cars without any hurdles thereby avoiding waste of time. Also, if someone is already late he wouldn't be late any further by having to search for the parking space and park his car. The security can be provided to their cars and can be prevented form stealing.
2) Super bazar Complex: It is observed that during sales and festivals large crowd is attracted towards malls and the parking is very haphazard. Also, the nearby roads are congested. To prevent the congestion and haphazard parking, the proposed system is an excellent choice.
3) Railway stations and Airports: A lot of people nowadays commute large distances by train daily to their workplace. Thus, they leave their own vehicles at the railway station for the day. This creates amess as sometimes people leave their vehicles several days at a stretch without paying the parking fees. Hence the proposed system can help to easily manage this problem easily.

4) Streets: It is observed everywhere India that while shopping from the local markets and shops people leave the vehicles unattended on the streets. This restricts the traffic flow. The proposed system will be very beneficial in regulating traffic flow on narrow roads and streets.

6.3 ADVANTAGES

- Enhanced user experience
- Optimized parking
- Reduced Traffic
- Increase safety
- Decrease management cost

6.4 DISADVANTAGES

6.4.1 Not provide guidance and payment for the driver.

6.4.2 Addition of security features to protect the user privacy.

6.4.3 If sensor fails then whole system fails.

6.5 REFLECTION NOTES

The following technical concepts were learnt during the course of the internship:

6.5.1 Basics of Arduino and programming

6.5.2 Working principle of sensors and interfacing with Arduino.

6.5.3 Reading sensor data and motor control.

6.5.4 Assembly of sensors and programming.

The following skills were developed during the course of the Internship:

6.5.5 Complex problem-solving skills

6.5.6 Team work skills.

6.5.7 Strong work ethics.

6.5.8 Organizational skills.

6.5.9 Personality Development and time management

CHAPTER 7

CONCLUSION AND FUTURE SCOPE

7.1 CONCLUSION

Automation is a step in the right direction for a future fulfillment in the world of transportation. This design provides an effective solution to the common problem discussed. The switching of LEDs based on the vehicle in the parking space was instantaneous based on no vehicle and vehicle detected. The design is flexible and can be altered based on the space available and can be installed even in tight and constrained space. Based on the number of LEDs detected a common information board is displayed indicating the count of parking spaces available. It can be concluded that with correct connection of some simple electrical components, it is possible to create an automatic smart car parking system, thus decreasing aimless driving, fuel and time, as well as making the process of parking considerably simpler.

7.2 FUTURE SCOPE

In future works, this framework can be enhanced by including different applications, For Example, internet booking by utilizing GSM. The driver or client can book their parking area at home or while in transit to the shopping center. This can diminish the season of the client to seeking the empty parking area. As a further review, distinctive sensor frameworks can be added to enhance this framework to distinguish the question and guide the driver or clients speediest. We will attempt to decrease the mechanical structure and attempt to make it ecofriendly.

REFERENCES

[1] P. Nagendra, "Smart parking system using internet of things (IoT) technology", IEEE International Conference on Recent Trends in Electronics, Information & Communication Technology (RTEICT), Bangalore, India, 2016, pp. 1421-1425.

[2] Al-Fuqaha, A., Guizani, M., Mohammadi, M., Aledhari, M., & Ayyash, M. “Internet of things: A survey on enabling technologies, protocols, and applications”, IEEE Communications Surveys & Tutorials, 2015 17(4), 2347-2376.

[3] Kim, M., & Kim, K. “Design of smart parking system based on IoT”, IEEE International Conference on Consumer Electronics (ICCE) (pp. 335-336).

[4] Khan, M., & Hussain, M. “Smart parking system: A review. Journal of Network and Computer Applications”, 2015, 118, 42-59.

[5] Kalaivani, T., & Radhakrishnan, S. “A survey on smart parking systems using IoT”, In International Conference on Intelligent Computing and Control Systems (ICICCS) ,2017,(pp. 437-442).

[6] M. Masoud, M. M. Yasin, N. M. Saad, "Smart Parking System: A Review of the State-of-the-Art", International Journal of Advanced Computer Science and Applications,2018, vol. 9, no. 6, pp. 202-208.

[7] M. B. Al-Ma'aitah, A. Al-Momani, "A Comprehensive Review of Smart Parking Systems", Journal of Sensors, vol. 2018.

[8] R. M. M. Fouad, M. A. M. Zin, A. A. M. Isa, "Smart Parking System: A Review of Literature and Technologies", IEEE International Conference on Innovative Research and Development (ICIRD), 2018, pp. 1-5.