Wireless and CELLULAR COMMUNICATION (18EC81)

Module-4

LTE – 4G

Key Enablers for LTE 4G – OFDM, SC-FDE and SC-FDMA, Channel Dependant Multiuser Resource Scheduling, Multi-Antenna Techniques, Flat IP Architecture, LTE Network Architecture **(Text 1, Sec 1.4)**

Multi-Carrier Modulation – Multicarrier concepts, OFDM Basics, OFDM in LTE, Timing and Frequency Synchronization, Peak to Average Ratio, SC-Frequency Domain Equalization, Computational Complexity Advantage of OFDM and SC-FDE.
(Text 1, Sec 3.1 – 3.7) **L1, L2, L3**

LTE – 4G

Key Enabling Technologies and Features of LTE

- To meet its service and performance requirements, LTE design incorporates important enabling radio and core network technologies.
- Here, we provide a brief introduction to some of the key enabling technologies used in the LTE design.

Exam Question: List the advantages of OFDM leading to its selection for LTE and explain. (8M) **Dec.2019/Jan.2020**

4.1 OFDM-Orthogonal Frequency Division Multiplexing (OFDM)

- One of the key differences between existing 3G systems and LTE is the use of Orthogonal Frequency Division Multiplexing (OFDM) as the underlying modulation technology.
- 3G systems such as UMTS (Universal Mobile Telecommunication Systems) and CDMA2000 (Code Division Multiple Access 2000) are based on Code Division Multiple Access (CDMA) technology.
- CDMA works by spreading a narrow band signal over a wider bandwidth to achieve interference resistance, and performs remarkably well for low data LTE communications such as voice, where a large filmier of users can be multiplexed to achieve high system capacity.
- OFDM has emerged as a technology of choice for achieving high data rates.
- It is the core technology used by a variety of systems including Wi-Fi and Wi-MAX. The following advantages of OFDM led to its selection for LTE:

a) Elegant solution to multipath interference
b) Exploitation of frequency diversity
c) Enables efficient multi-access scheme:
d) Efficient support of broadcast services:
e) Reduced computational complexity:
f) Robust Against narrowband interference:
g) Graceful degradation of performance under excess delay
h) Suitable for coherent demodulation:

i) Facilitates use of MIMO

Elegant solution to multipath interference:

- The critical challenge to high bit-rate transmissions in a wireless channel is **inter symbol interference** caused by multipath.
- In a multipath environment, when the time delay between the various signal paths is a significant fraction of the transmitted signal's symbol period, a transmitted symbol may arrive at the receiver during the next symbol and cause **inter symbol interference** (ISI).
- At high data rates, the symbol time is shorter; hence, it only takes a small delay to cause ISI, making it a bigger challenge for broad band wireless.
- OFDM is a **multicarrier modulation** technique that overcomes this challenge in an elegant manner.
- The basic idea behind multicarrier modulation is to **divide a given high-bit-rate data stream into several parallel lower bit-rate streams and modulate each stream on separate carriers called subcarriers, or tones**.
- Splitting the data stream into mainly parallel streams increases the symbol duration of each stream such that the multipath delay spread is only a small fractional of the symbol duration.
- OFDM is a spectrally efficient version of multicarrier modulation, where the subcarriers are selected such that they are all orthogonal to one another over the symbol duration, thereby avoiding the need to have non overlapping sub carrier channels to **eliminate inter-carrier interference**.
- In OFDM, any residual inter symbol interference also be eliminated by using **guard intervals between OFDM symbols** that are larger than the **expected multipath delay**:
- By making the guard interval larger than the expected multipath delay spread, ISI can be completely eliminated.
- **Adding a guard interval**, however, **implies power wastage** and a **decrease in bandwidth efficiency**.

Exploitation of frequency diversity:

- OFDM facilitates coding and interleaving across subcarriers in the frequency domain, which can provide robustness against burst errors caused by portions of the transmitted spectrum undergoing deep fades.
- OFDM also allows for the channel bandwidth to be scalable without impacting the hardware design of the base station and the mobile station.
- This allows LTE to be deployed in a variety of spectrum allocations and different channel bandwidths.

Enables efficient multi-access scheme:

- OFDM can be used as a multi-access scheme by partitioning different subcarriers among multiple users. This scheme is referred to as OFDMA and is exploited in LTE.
- OFDMA offers the ability to provide fine granularity in channel allocation, which can be exploited to achieve significant capacity improvements, particularly in slow time-varying channels

Efficient support of broadcast services:

- By synchronizing base stations to timing errors well within the OFDM guard interval, it is possible to operate an OFDM network a s a single frequency network (SFN).
- This allows broadcast signals from different cells to combine over the air to significantly enhance the received signal power, thereby enabling higher data rate broadcast transmissions for a given transmit power.
- LTE design **leverages this OFDM** capability to improve efficient broadcast services

Robust Against narrowband interference:

- OFDM is relatively robust against narrowband interference, since such interference affects only a fraction of the subcarriers.

Reduced computational complexity:

- OFDM can be easily implemented using Fast Fourier Transforms (FFT/IFFT), and the computational requirements grow only slightly faster than linearly with data rate or bandwidth.
- The computational complexity of OFDM can be shown to be **O (** $\boldsymbol{B\log BT_m}$**)** where B is the bandwidth and T_m is the delay spread.

Graceful degradation of performance under excess delay:

- The performance of an OFDM system degrades gracefully as the delay spread exceeds the value designed for.
- Greater coding and low constellation sizes can be used to provide **fallback rates** that are significantly more robust against delay spread.
- In other words, OFDM is well suited for **adaptive modulation and coding**, which allows the system to make the best of the available channel conditions.
- This contrasts with the abrupt degradation owing to error propagation that single-carrier system experience as the delay spread exceeds the value for which the equalizer is designed.

Suitable for coherent demodulation:

- It is relatively easy to do pilot-based channel estimation in OFDM systems, which renders then suitable for coherent demodulation schemes that are more power efficient.

Facilitates use of MIMO:

- MIMO stands for multiple input multiple output and refers to a collection of signal processing techniques that use multiple antennas at both the transmitter and receiver to improve system performance.
- For MIMO techniques to be effective, it is required that the channel conditions are such that the multipath delays do not cause inter symbol interference in other words, the channel has to be a flat finding channel and not a frequency selective one.

Sai Vidya Institute of Technology

- At very high data rates, this is not the case and therefore MIMO techniques **do not work** well in **traditional broadband channels**. OFDM, however, converts frequency selective board band channel into several narrowband flat fading channels where the MIMO models and techniques work well.
- MIMO and OFDM are effectively used in Wi-Fi and WiMAX (Worldwide Interoperability for Microwave Access) systems.

4.2. SC-FDE, and SC-FDMA,

To keep the cost down and the battery life up, LTE incorporated a power efficient **Transmission scheme** for the **uplink**. Single Carrier Frequency Domain Equalization (SC-FDE) is conceptually similar to OFDM but instead of transmitting the **Inverse Fast Fourier Transform (IFFT)** of the actual data symbols, the data symbols are sent as a sequence of **QAM** (Quadrature Amplitude Modulation) symbols with a **cyclic prefix added**; the **IFFT** is added at the end of the receiver.
SC-FDE retains all the advantages of **OFDM** such as **multipath resistance** and **low complexity**, while having a low peak-to-average ratio of 4-5 dB.
The uplink of LTE implements a multi-user version of SC-FDE, called **SC-FDMA**, which allows multiple users to use parts of the frequency spectrum.
SC-FDMA closely resembles OFDMA and can in fact be thought of as **"DFT pre-coded OFDMA"**.
SC-FDMA also preserves the **PAR (Peak to Average Power Ratio-PAPR)** properties of SC-FDE but increases the complexity of the transmitter and the receiver.

4.3. Channel Dependent Multi-user Resource Scheduling,

The OFDMA scheme used in LTE provides enormous flexibility in how channel resources are allocated. Multi-user scheduling in cellular network is shown in figure 4.1.

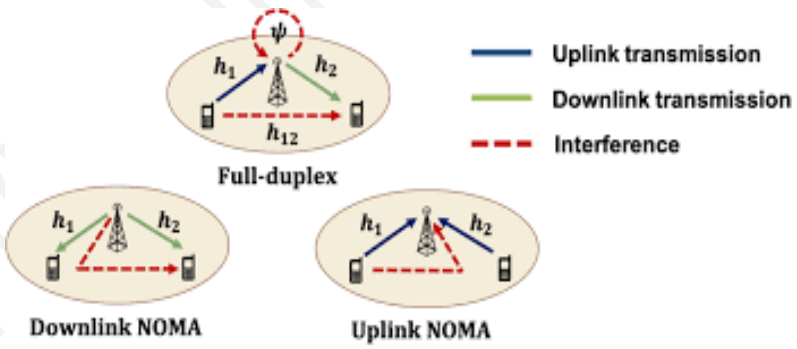

Fig4.1. Multi-user scheduling in cellular network

OFDMA allows for allocation in both **time and frequency** and it is possible to design algorithms to **allocate resources** in **flexible** and **dynamic manner** to meet arbitrary throughput, delay.
The standard supports **dynamic, channel-dependent scheduling** to enhance overall system capacity.

Given that each user will be experiencing uncorrelated fading channels, it is possible to allocate

subcarriers among users in such a way that the overall is capacity is increased. This technique, called **frequency selective multiuser scheduling,** calls for focusing transmission power in each user's best channel portion, thereby increasing the overall capacity.
Frequency selective scheduling requires good channel tracking and is generally only viable in **slow varying channels.**
For **fast varying channels**, the overhead involved in doing this negates the potential capacity gains.

In OFDMA, **frequency selective scheduling** can be combined with **multi-user time domain scheduling**, which calls for scheduling users during the crests of their individual fading channels. Capacity gains are also obtained by adapting the modulation and coding to the instantaneous signal-to-noise ratio conditions for each user subcarrier.

For high-mobility users, OFDMA can be used to achieve frequency diversity.
By coding and interleaving across subcarriers in the frequency domain using a uniform random distribution of subcarriers over the whole spectrum, the signal can be made more robust against frequency **selective fading or burst errors.**

Exam Question: Explain multi antenna techniques. (4M) **June/July 2019**

4.4. Multi-Antenna Techniques,

The LTE standard provides extensive support for implementing advanced multi-antenna solutions to improve link robustness, system capacity, and spectral efficiency. Depending of the deployment scenario, one or more of the techniques can be used. Multi antenna techniques supported in LTE include:

- **Transmit diversity**
- **Beam forming**
- **Spatial multiplexing**
- **Multi-user MIMO**

Transmit diversity:
(Note: **Diversity** is a powerful communication technique that provides wireless link improvements at relatively low cost. **Time Diversity**: using time slots separated in time and time more than the channel coherence time)
This is a technique to combat **multipath fading** (Multipath fading occurs when signals reach a receiver via many paths and relative strength and phases change) in the wireless channel.
The idea here is to send copies of the same signal, coded differently, **over multiple transmit antennas**.
LTE transmit diversity is based on **space-frequency block coding** (SFBC) techniques complemented with **frequency shift time diversity** (FSTD) when four transmit antenna are used.
Transmit diversity is primarily intended for common **downlink channels** that cannot make use of channel-dependent scheduling.
It can also be applied to user transmissions such as **low data rate VoIP**, where the **additional overhead** of **channel-dependent scheduling** may not be justified.
Transmit diversity increases **system capacity** and **cell range**.
Transmit diversity, receive diversity and multiplexing concept is explained in Figure 4.2. SISO stands

for Single Input and Single Output.
SIMO-Single Input and Multiple Output
MISO-Multiple input and Singe Output
MIMO-Multiple Input and Multiple Output

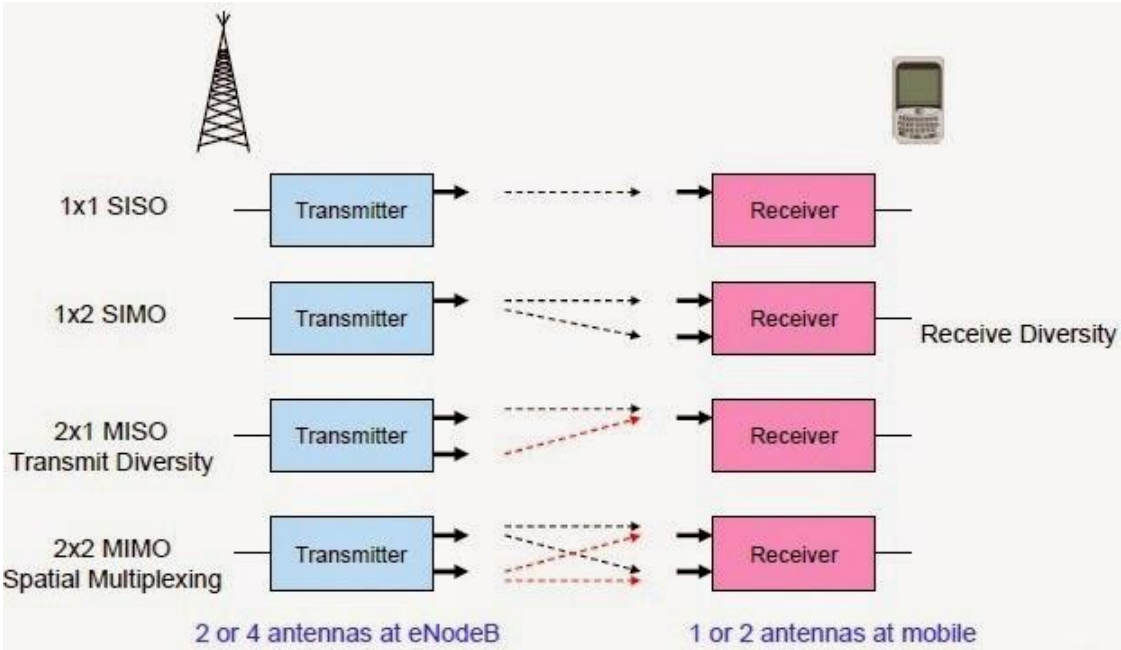

Fig 4.2 Transmit diversity

Beamforming:

Multiple antennas in LTE may also be used to transmit the same signal appropriately weighted for each antenna element such that the effect is to focus the transmitted beam in the direction of the receiver and away from interference, thereby improving the received **signal-to-interference ratio**.

Beamforming can provide significant improvements in **coverage range**, **capacity, reliability**, and **battery life**. It can also be useful in providing angular information for user tracking. LTE supports beamforming in the downlink. Fig.4.3. shows the beamforming array Beamforming.

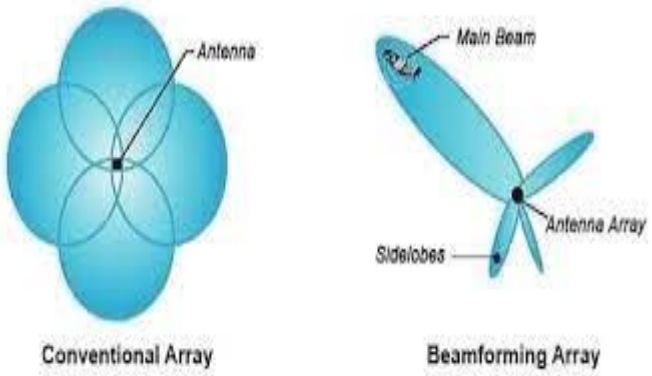

Fig.4.3 Beamforming

Spatial multiplexing:

The idea behind spatial multiplexing is that multiple in dependent streams can be transmitted in parallel over multiple antennas and can be separated at the receiver using multiple receive chains through appropriate signal processing.

This can be done as long as the multipath channels as seen by the different antennas are sufficiently decorrelated as would be the case in a scattering rich environment.

Spatial multiplexing provides **data rate** and **capacity gains proportional** to the number of antennas used.

LTE supports spatial multiplexing with four transmitting and four receiving antennas. Figure 4.4 shows the spatial multiplexing concept.

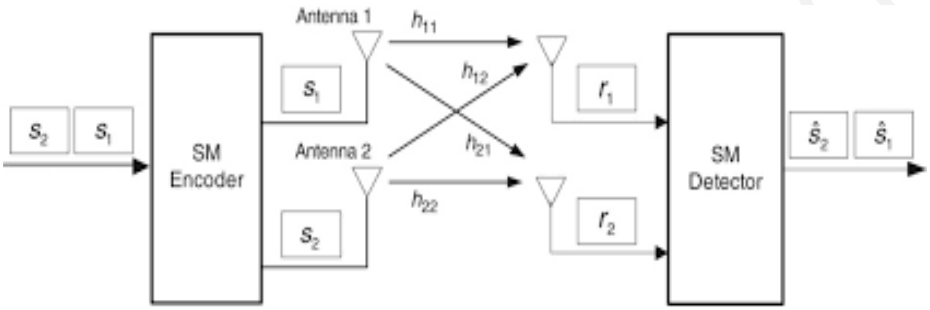

Fig.4.4 Spatial Multiplexing

Multi-user MIMO:

Since **spatial multiplexing** requires **multiple transmit chains**, it is currently not supported in the uplink due to **complexity and cost considerations**.

Multi-user Multiple input and Multiple Output (MU-MIMO) allows **multiple users in the uplink**, each with a **single antenna**, to transmit using same frequency and time resource.

The signals from MU-MIMO users are separated at the **base station receiver** using accurate channel state information of each user obtained through uplink reference signals that are orthogonal between users. Multi-user with multiple input and multiple output is shown in figure 4.5.

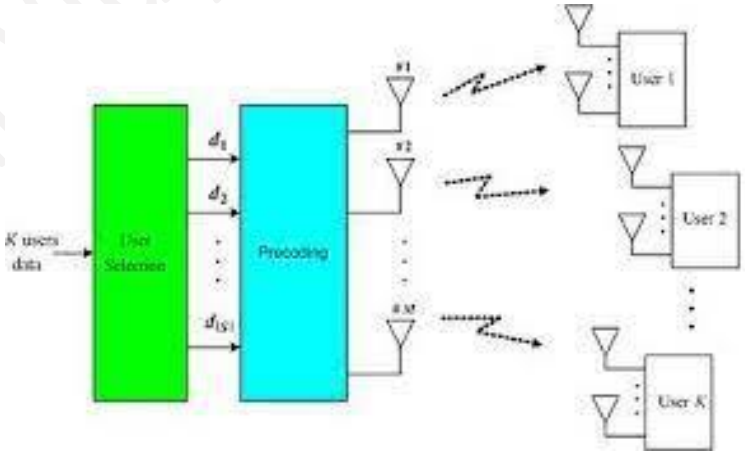

Fig.4.5. Multi-user MIMO

Exam Question: Discuss with block diagram of LTE Network architecture (MQP)

4.5. Flat IP Architecture or IP-Based Flat Network Architecture

Besides the air-interface, the other radical aspect of LTE is the flat **radio and core network architecture.**

"Flat" here implies **fewer nodes** and less hierarchical structure for the network. The lower cost and lower latency requirements drove the design toward a flat architecture since fewer nodes obviously implies a lower infrastructure cost.

It also means fewer interfaces and protocol-related processing, and reduced interoperability testing, which lowers the development and deployment cost.

Fewer nodes also allow better optimization of **radio interface**, **merging of some control plane protocols,** and **short start-up time.**

Figure 4 . 6 . shows how the 3GPP network architecture evolved over a few releases. 3GPP Release 6 architecture, which is conceptually very similar to its predecessor, has four network elements in the data path: the base station or Node-B, radio network controller (RNC), **serving GPRS service node** (SGSN), and **gateway GRPS service node** (GGSN).

Sai Vidya Institute of Technology

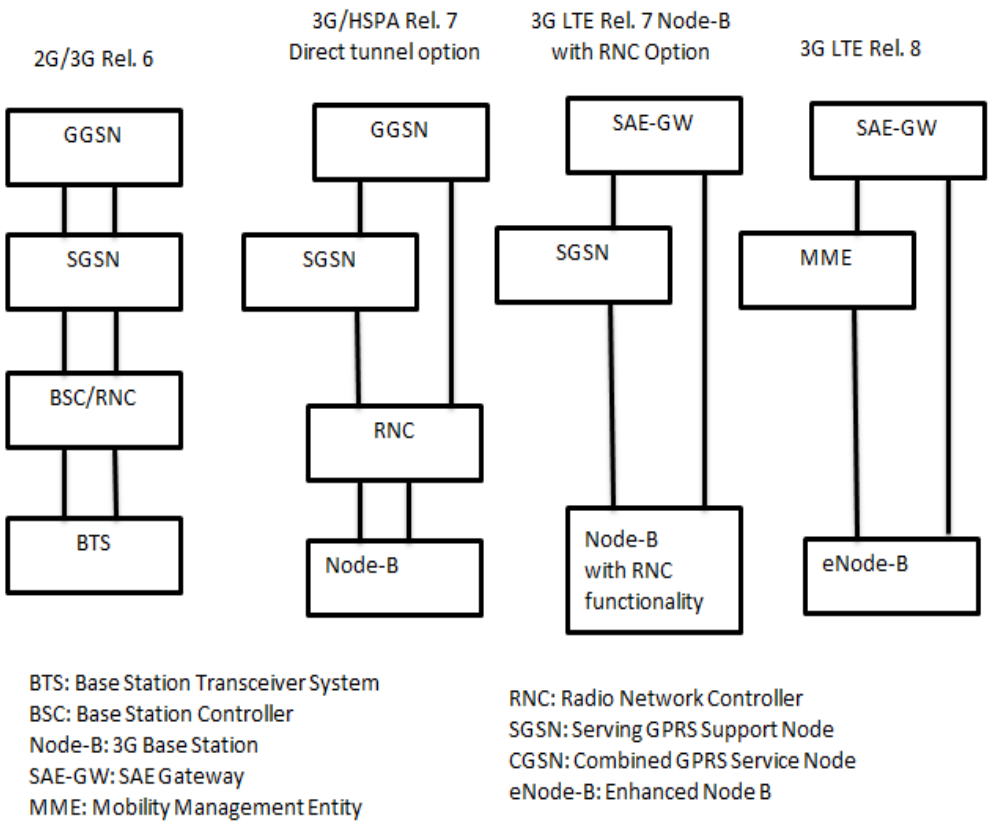

Fig.4.6. 3GPP evolution toward a flat LTE SAE architecture

Release 7 introduced a **direct tunnel option** from the RNC to GGSN, which eliminated SGSN from the data path.

LTE on the other hand, will have only **two network elements** in the **data path**: the **enhanced Node-B or e Node-B**, and a **System Architecture Evolution Gateway** (SAE-GW).

Unlike all previous cellular systems, **LTE merges the base station and radio network controller functionality into a single unit.**

The control path includes a functional entity called the **Mobility Management Entity** (MME), which provides control plane functions related to subscriber, mobility, and session management.

The MME and SAE-GW could be collocated in a single entity called the access gateway (a-GW).

Exam Question: Write the block diagram of end to end architecture of EPC supporting current and legacy Radio access networks and discuss the elements of EPC. **Dec.2019/Jan.2020**

4.6. LTE Network Architecture.

The core network design presented in 3GPP Release 8 to support LTE is called the Evolved Packet

Core (EPC).

EPC is designed to provide a high capacity, all IP, reduced latency, flat architecture that dramatically reduces cost and supports advanced real-time and media-rich services with quality of experience.

It is designed not only to support new radio access networks such as LTE, but also provide interworking with legacy 2G GERAN (**GSM (Global system for Mobile communication) EDGE (Enhanced data for Global Evolution) Radio Access Network)** and 3G UTRAN (**Universal Mobile Telephone service (UMTS) Terrestrial Radio Access Network**) networks connected via SGSN.

Functions provided by the EPC include access control, packet routing and transfer, mobility management, security, resource in management, and network management.

Fig. 4.7 shows the Evolved Packet Core (EPC) architecture and the **EPC includes four new elements**

(1) **Serving Gateway** (SGW), which terminates the interface toward the 3GPP (**3rd generation Partnership Project)** radio access networks

(2) **Packet Data Network Gateway** (PGW),which controls IP data services, does routing, allocates IP addresses, enforces policy, and provides access for non-3GPP access networks:

(3) **Mobility Management Entity** (MME), which supports user equipment context and identity as well as authenticates and authorizes users; and

(4) **Policy and Charging Rules Function** (PCRF). This manages QoS aspects. It is a concatenation of Policy Decision Function (PDF) and Charging Rules Function (CRF).

Serving Gateway (SGW):

- The SGW acts as a demarcation point between the **RAN and core network**, and manages user plane mobility.
- It serves as the mobility anchor when terminals move across areas served by different eNode-B elements in **E-UTRAN, as** well as across other 3 GPP radio networks such as **GERAN and UTRAN.**
- SGW does **downlink packet** buffering and initiation of network-triggered service request procedures.
- Other functions include **lawful interception**, **packet routing** and **forwarding**, **transport level packet marking in the uplink and the downlink**, accounting support for per user, and inter-operator charging.

Packet Data Network Gateway (PGW):

- The PGW acts as the **termination point** of the EPC toward other **Packet Data Networks** (PDN) such as the Internet, private IP network, or the IMS network providing end-user services.
- It serves as an anchor point for sessions toward external PDN and provides functions such as user IP address allocation, policy enforcement, packet filtering, and charging support.
- **Policy enforcement** includes operator-defined **rules for resource allocation** to control

data rate, QoS, and usage.

- Packet filtering functions includesdeep packet inspection for application detection.

Mobility Management Entity (MME):

- The MME performs the signaling and control functions to manage the user terminal access to the network connections, assignment of network resources, and mobility management function such is idle mode location tracking. paging, roaming, and handovers.
- MME controls all control plane functions related to subscriber and session management.
- MME manages thousands of eNode-B elements; it's the key difference from 2G or 3G platforms using RNC and SGSN platform.
- MME provides security functions such as providing temporary identities for user terminal, interacting with Home Subscriber Server for authentication, and negotiation of ciphering and integrity protection algorithms.

Policy and Charging Rules Function (PCRF):

- The **Policy and Charging Rules Function** (PCRF) is a concatenation of **Policy Decision Function** (PDF) and **Charging Rules Function** (CRF).
- PCRF interfaces with the PDN gateway and supports service data flow detection, policy enforcement, and flow-based charging.
- The PCRF was actually defined in Release 7 of 3GPP ahead of LTE.
- Although not much deployed with pre-LTE systems, it is mandatory for LTE.
- Release 8 further enhanced PCRF functionality to include support for -3GPP access (e.g Wi-Fi or fixed line access) to the network.

Sai Vidya Institute of Technology

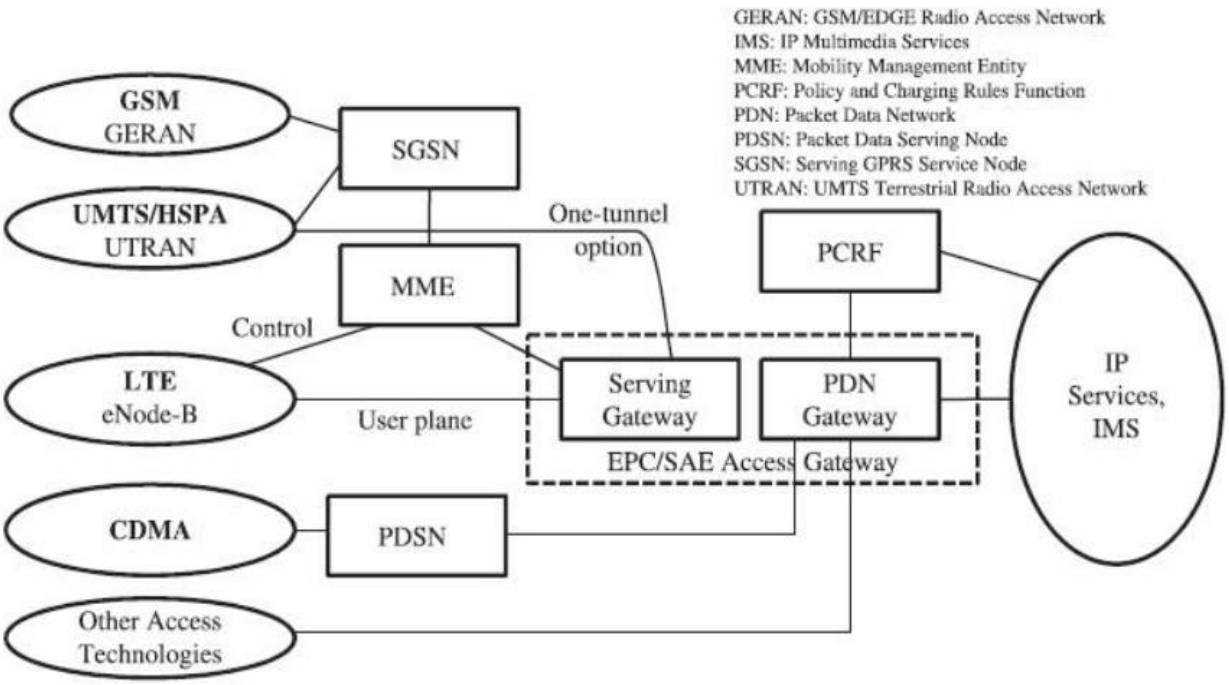

Fig. 4.7 Evolved Packet Core **(EPC)** architecture

****

Multicarrier Modulation

Multicarrier Modulation includes many modern wireless data systems, including Digital Subscriber Lines (DSL), Wireless LAN's (802.11a/g/n), digital Video broadcasting, and also 3G cellular technologies such as WiMAX and LTE.

Multicarrier uses multiple parallel subscribers, invariably generated by the IDFT.

Common Multicarrier Modulation method is Orthogonal Frequency division Multiplexing (OFDM). and Discrete Multitone (DMT) in DSL and Single Carrier Frequency Division Multiple Access (SC-FDMA) in the LTE uplink.

The Main goals of the chapter are

1. Demonstrate the elegance of multicarrier modulation and its working.
2. Understanding the OFDM system design, covering key concept such as cyclic prefix, frequency equalization and synchronization.
3. Implementation issues for OFDM system such as Peak-to average ratio.
4. Overview of SC-FDE, and how it avoids the Peak-to-average ratio problem by utilizing the

cyclic prefix and FFT.

4.7. Multicarrier concepts,

The main idea of multicarrier modulation are obtaining **high data rates** and getting **intersymbol interference (ISI) free channels**.

In order to have a channel that does not have ISI, the symbol time T_S has to be larger than the channel delay spread τ.

Digital communication system cannot function if ISI is present---an error floor quickly develops and T_S approaches or falls belowτ, the bit error rate becomes intolerable.

As we have noted previously, for wideband channels that provide the high data rates needed by today's application, the desired symbol time is smaller than the delay spread, so inter symbol interference is severe.

In order to overcome this, **multicarrier modulation divides the high data rate transmit bit stream to L lower rate substreams**, where L is chosen so that each of the **subcarriers has effective symbol time $\boldsymbol{T_S L \gg \tau}$,** and hence effectively ISI free.

These individual substreams can then be sent over **L parallel subcarriers maintaining** the total desired data rate.

The subcarriers are orthogonal under ideal propagation conditions in which case multicarrier modulation is often referred to as orthogonal frequency division multiplexing (OFDM).

The data rate on each of the subcarrier is much less than the total data rate, and so the corresponding subcarrier bandwidth is much less than the total system bandwidth.

The **number of substreams** is chosen to ensure that each subcarrier has a **bandwidth less than the coherence bandwidth of the channel**, so the subscribers experience relatively **flat fading**. Thus, the ISI on each subscriber is small.

In the digital implementation of OFDM, the ISI can be completely eliminated through the use of **cyclic prefix.**

Example 1:

A certain wideband wireless channel has a delay spead of 1 microseconds. In order to overcome ISI, assume a requirement that $T_S \geq 10\tau$.

1. What is the maximum bandwidth allowable in this system if the ISI constraint is to be met without using multicarrier modulation?
2. If multicarrier modulation is used, and we desire a 10MHz bandwidth, what is the required number of subcarriers?

Solution:

1). If it assumed that $T_S \geq 10\tau$ in order to satisfy the ISI free condition, the maximum bandwidth would be 1/ T_S=1/ τ=100KHz,

2). If multicarrier modulation is employed, the symbol time goes to T=LT_S,

Dely spread criterion mandates that the new symbol time is still bounded to 10% of the delay

spread, that is $(LT_S)^{-1}$=100KHz.

But for 10MHz bandwidth requirement gives $(T_S)^{-1}$=10MHz.

Hence L ≥100, so a suitable choice of L might be 128 (Power of 2 FFT is efficient for such numbers) subcarriers to allow the full 10MHz bandwidth to be used with negligible ISI.

4.7.1. An Elegant Approach to Intersymbol Interference

Multicarrier modulation in its simplest form divides the wideband incoming data streams into L narrowband substreams, each of which is then transmitted over different orthogonal frequency subcarriers. Because of the L substreams in multicarrier modulation the ISI is not significant.

A multicarrier transmitter and receiver are shown in figure 4.8a. and 4.8b respectively. Here, a high rate data signal of rate R bps and with a passband bandwidth B is broken into L parallel substreams each with rate R/L and passband bandwidth B/L. After passing through a channel H(f), the received signal is shown in figure 4.9.

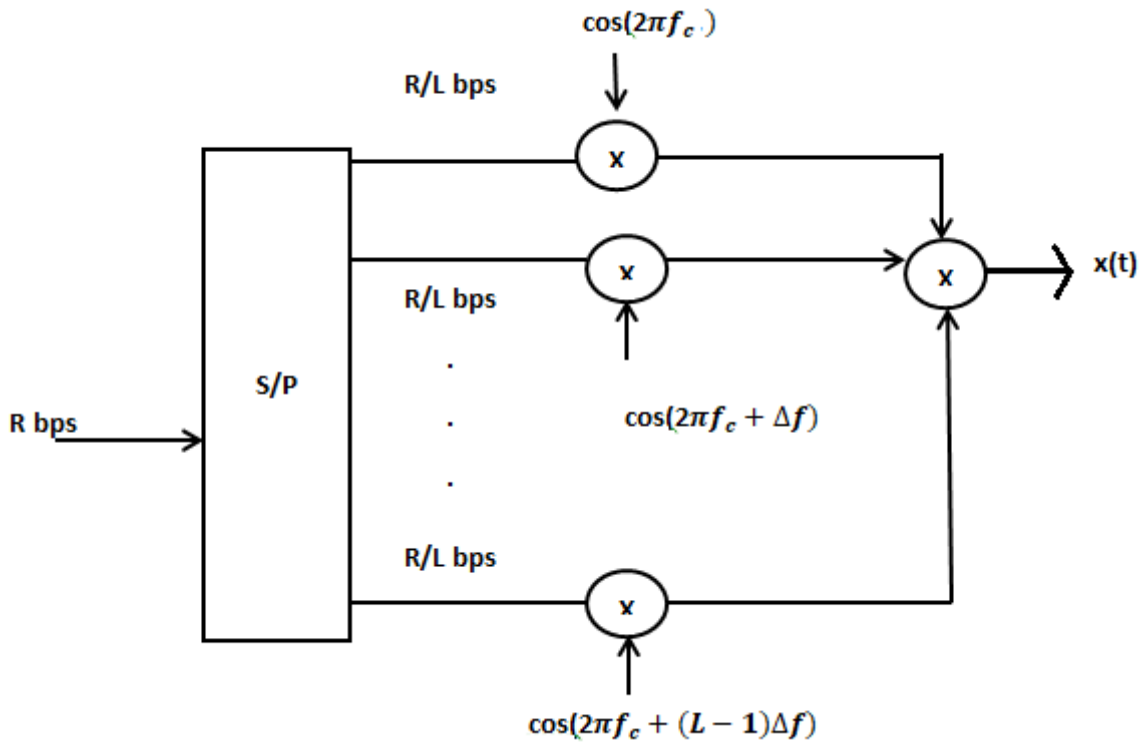

Fig. 4.8a. A multicarrier transmitter

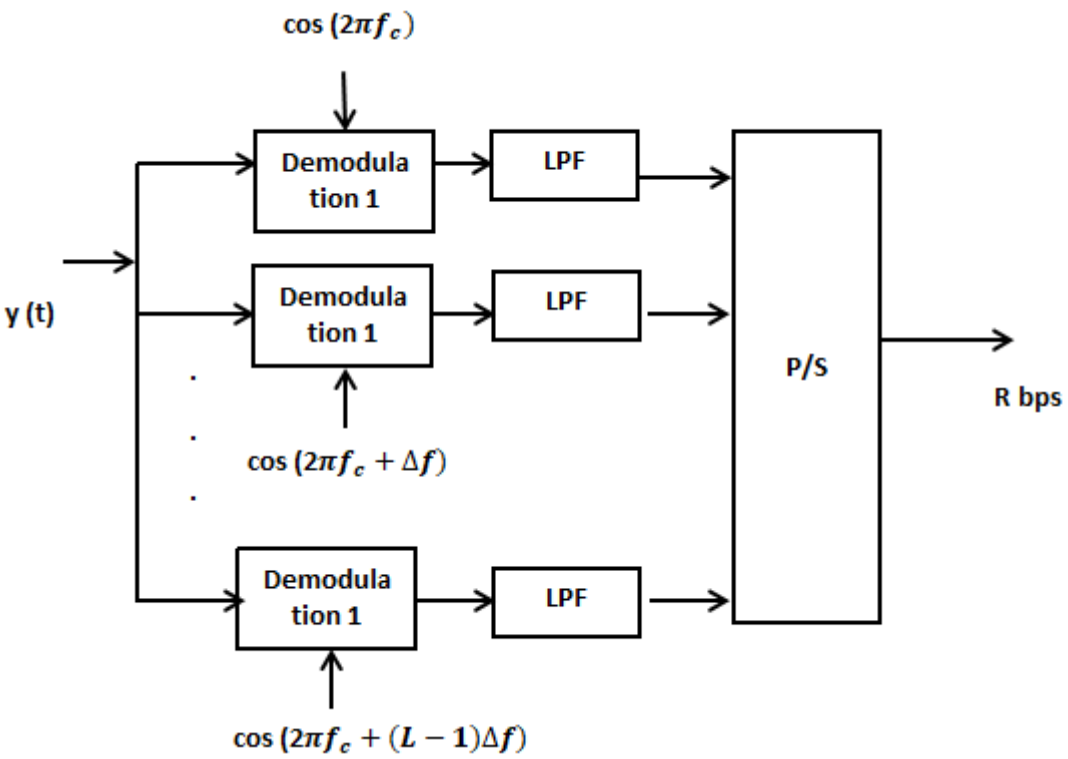

Fig. 4. 8b A multicarrier receiver

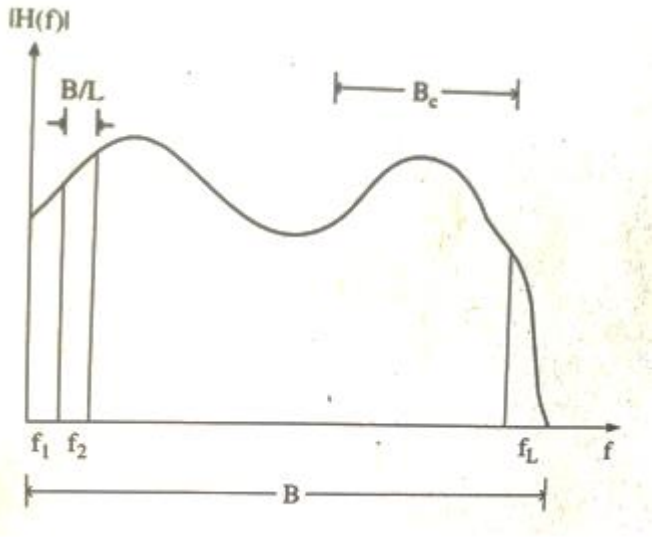

Fig. 4.9. The Transmitted multicarrier signal

The transmitted multicarrier signal experiences approximately flat fading on each subcarrier since $B/L << B_C$,(frequency domain Bandwidth) even though the overall channel experiences frequency selective fading, that is $B > B_C$.

In time domain, the symbol duration in each subcarrier has increased to T=LTs, if L increases then the symbol duration exceeds the channel delay spread, that is $T >> \tau$, which is the requirement for ISI free communication.

The drawbacks of this method are 1). In a realistic implementation, a large BW penalty will be inflicted since the subcarriers can't have perfectly rectangular pulse shapes and still be time limited.

2). Very high quality (expensive), LPF will be required to maintain the orthogonality of the subcarrier at receiver. It requires L independent RF units and demodulation paths.

4.8. OFDM Basics

In order to overcome the daunting requirement for "L" RF radios in both the transmitter and receiver, OFDM employs an efficient computational technique known as the **Discrete Fourier Transform (DFT),** which lends itself to a highly efficient implementation commonly known as the **Fast Fourier Transform (FFT)**.

4.8.1. Block Transmission with Guard Intervals

We begin by grouping "L" data symbols into a block known as an ***OFDM symbol***. An OFDM symbol lasts for a duration of T seconds, where $T = LT_S$.

In order to keep each OFDM symbol independent of the others after going through a wireless channel, it is necessary to introduce a guard time in between each OFDM symbol, as shown here:

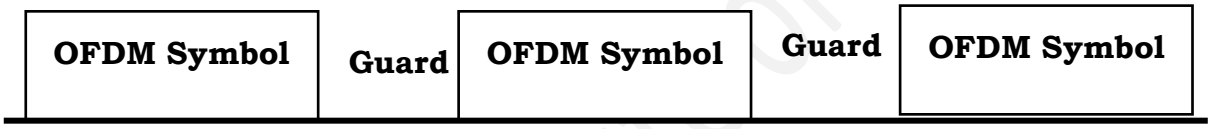

This Way, after receiving a series of OFDM symbols, as long as the guard time T_g. is larger than the delay spread of the channel τ, each OFDM symbol will only interfere with itself.

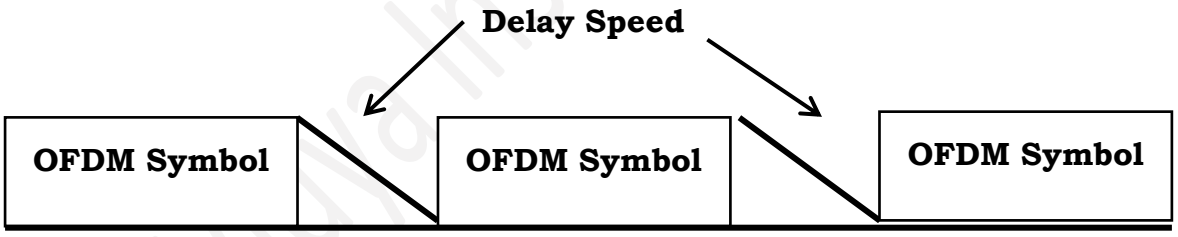

OFDM transmissions allow ISI within an OFDM symbol, but by including as sufficiently large guard band, it is possible to guarantee that there is no interference *b*etween subsequent OFDM symbols.

4.8.2 Circular Convolution and the DFT

Now that subsequent OFDM symbols have been rendered orthogonal with a guard interval, the next task is to attempt to remove the ISI wit*h*in each OFDM symbol.

When the input data stream x[n] is sent through a linear time invariant FIR channel h[n], the output is the linear convolution of the input and the channel, that is, y [n] = x[n]* h[n].

However, let's imagine for moment that it was possible to compute y[n] in terms of a circular convolution, that is

$$y[n] = x[n] \circledast h[n] = h[n] \circledast x[n] \quad \text{.....(4.1)}$$

Where

$$x[n] \circledast h[n] = h[n] \circledast x[n] \triangleq \sum_{k=0}^{L-1} h[k]x[n-k]_L \quad \text{.....(4.2)}$$

and the circular function $x[n]_L$=x[nmodL] is a periodic version of x[n] with period L.

In other words, each value of y[n]= $h[n] \circledast x[n]$ is the sum of the product of L terms.

In this case of Circular Convolution, it would be possible to take the DFT of the channel output y[n] to get

$$\text{DFT}\{y[n]\}=\text{DFT}\{ h[n] \circledast x[n]\} \quad \text{.....(4.3)}$$

which yields in the frequency domain

$$Y[m] = H[m]X[m] \quad \text{.....(4.4)}$$

Note that the duality between circular convolution in the time domain and simplemultiplication in the frequency domain is a property unique to the DFT. The L point DFT is defined as

$$\text{DFT}\{x[n]\} = X[m] \triangleq \frac{1}{\sqrt{L}} \sum_{n=0}^{L-1} x[n] e^{-j\frac{2\pi nm}{L}} \quad \text{.....(4.5)}$$

while its inverse, the IDFT is defined as

$$\text{IDFT}\{X[m]\} = x[n] \triangleq \frac{1}{\sqrt{L}} \sum_{m=0}^{L-1} x[m] e^{j\frac{2\pi nm}{L}} \quad \text{.....(4.6)}$$

Referring to (4.6) , this formula actually describes an ISI-free channel in the frequency domain, where each input symbol X[m]is simply scaled by a complex-value *H[*m].

So, given knowledge of the channel frequency response *H[m]* at the receiver, it is trivial to recover the input symbol by simply computing

$$\hat{X}[m] = \frac{Y[m]}{H[m]}, \quad \text{.....(4.7)}$$

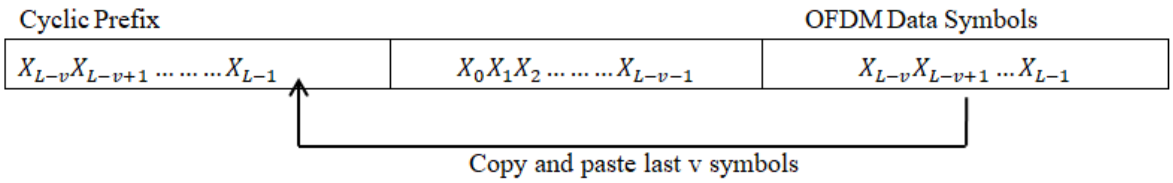

Fig. 4.10. The OFDM cyclic prefix

Where the estimate$\hat{X}[m]$,

$\hat{X}[m]$ Generally be imperfect due to additive noise, co-channel interference, imperfect channel estimation, and other imperfection.

4.8.3. The Cyclic Prefix:

The OFDM utilizes the FFT algorithm for computing the DFT and IFFT algorithm for IDFT, which reduces the number of required multiplication and additions from O (L^2) to O (L log L).

The IFFT algorithm based operation at the transmitter allows all the subcarriers to be created in the digital domain, and thus requires only a single radio to be used rather than L radios as in figure 4.8.

The circular convolution is used to provide a ISI free channels. Here a cyclic prefix is added to the transmitted signal as shown in figure 4.20. Then it creates a signal that appears to be $x[n]_L$, and y[n]= $h[n] \circledast x[n]$.

$$x = [x_1 \quad x_2 \ldots\ldots\ldots\ldots x_L] \ldots\ldots\ldots\ldots\ldots (4.8)$$

after applying a cyclic prefix of length "v" the actual transmitted signal is

$$\underbrace{x_{CP} = x_{L-v} x_{L-v+1} \ldots\ldots\ldots x_{L-1}}_{\textbf{Cyclic prefix}} \underbrace{x_0 \;\; x_1 \;\; x_2 \ldots\ldots\ldots\ldots x_{L-1}}_{\textbf{original data}} \ldots\ldots\ldots\ldots\ldots (4.9)$$

The output of the channel is by definition $\boldsymbol{y_{CP}} = \boldsymbol{h} * \boldsymbol{x_{CP}}$,where h is the length v+1 vector describing the impulse response of the channel during the OFDM symbol.

The output $\boldsymbol{y_{CP}}$has $(L+v)+(v+1)-1 = L+2v$ samples.

The first v samples of $\boldsymbol{y_{CP}}$ contains interference from the preceding OFDM symbol and so are discarded.

The last v samples disperse into the subsequent OFDM symbol, and so also are discarded.

This leaves exactly L samples for the desired output y, which is the required to recover the L data symbols embedded in x.

The L samples of y will be equivalent to$y = h \circledast x$. The possible proof of inductive argument methods is shown in figure 4. 11.

The outputs are $y_0, y_1 \ldots\ldots y_{L-1}$

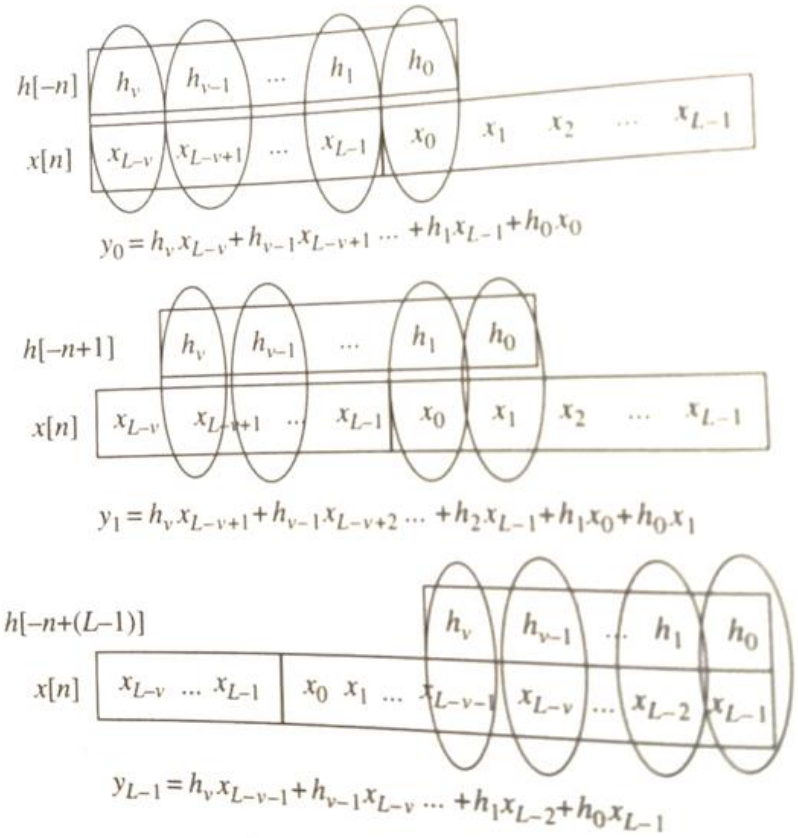

Fig. 4.11. The OFDM cyclic prefix creates a circular convolution at the receiver (Signal y) even though the actual channel causes a liner convolution.

Cyclic prefix comes with both a bandwidth and power loss penalty. Since v redundant symbol are sent, the required bandwidth for OFDM increases from B to $\frac{L+v}{L}$B.

$$\text{Rate loss} = \text{power loss} = \frac{L}{L+v}$$

4.8.4. Frequency Equalization

- Equalization is the process of adjusting the balance between frequency components within a received OFDM signal.
- Frequency domain equalizers (FEQs) have been applied extensively in multicarrier systems to enhance transmission rate by reducing transmit redundancy in the form of guard interval.
- Received symbols to be estimated, the complex channel gains for each subcarrier must be

known, which corresponds to knowing the amplitude and phase of the subcarrier.

- After the FFT is performed, the data symbols are estimated using a one-tap frequency domain equalizer, or FEQ, as

$$\hat{X}_l = \frac{Y_l}{H_l} \ldots\ldots..(4.9)$$

Where H_l is the complex response of the channel at the frequency $fc + (l - 1)\,\Delta f$, and

Therefore it both corrects the phase and equalizes the amplitude before the decision device.

4.8.5. An OFDM Block Diagram:

Let us now briefly review the key steps in OFDM communication system, each of which can be observed in figure 4.12.

1. The first step in OFDM is to break a wideband signal of bandwidth B into L narrowband signals (subcarriers) each of bandwidth *B/L*. This way, the aggregate symbol rate is maintained, but each subcarrier experiences flat fading, or ISI-free communication, as long as a cyclic prefix that exceeds the delay spread is used. The L subcarriers for a given OFDM symbol are represented by a vector **X**, which contains the L current symbols.

2. In order to use a single wideband radio instead of L independent narrow band radios, the subcarriers are created digitally using an IFFT operation.

3. In order for the IFFT/FFT to decompose the ISI channel into orthogonal subcarriers, a cyclic prefix of length v must be appended after the IFFT operation. The resulting $L + v$ symbols are then sent in serial through the wideband channel.

4. At the receiver, the cyclic prefix is discarded, and the L received symbols are demodulated using an FFT operation, which results in L data symbols, each of the form $Y_l = H_l X_l + N_l$ for subcarrier l.

5. Each subscriber can then be equalized via an FEQ by simply dividing by the complex channel gain H[i] for that subcarrier. This results in $\hat{X}_l = X_l + N_l / H_l$.

During this operation assumption made is transmitter and receivers are perfectly synchronized.

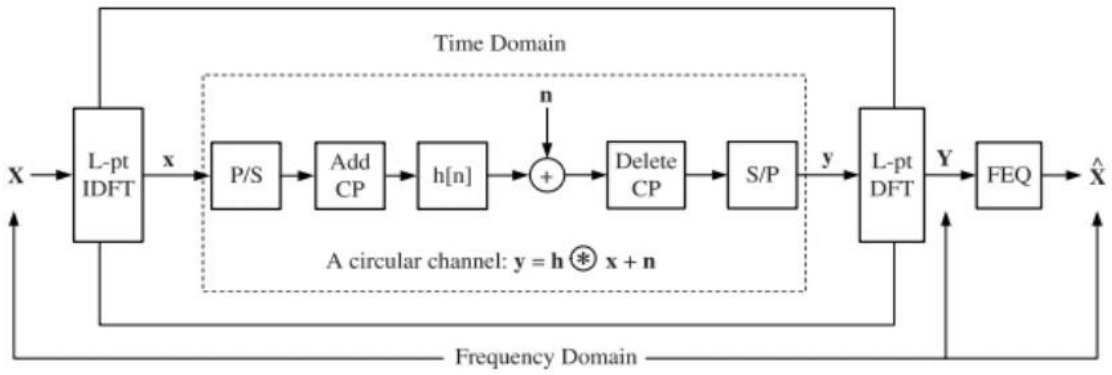

Fig.4.12: An OFDM system in vector notation. In OFDM, the encoding and decoding is done in the frequency domain, where X,Y and $\hat{X}$ contain the L transmitted, received and estimated data symbols.

4.9. OFDM in LTE,

To gain an appreciation for the time and frequency domain interpretations of OFDM, LTE systems can be used as an example.

Although simple in concept, the subtleties of OFDM can be confusing if each signal processing step is not understood. To ground the discussion, we will consider a passband OFDM system, and then give specific values for the important system parameters.

Figure 4.13 below shows the up close view of a passband OFDM modulation engine.

The inputs to this figure are *L* independent QAM symbols (the vector **X**), and these L symbols are treated as separate subcarriers. These *L* data-bearing symbols can be created from a bit stream by a symbol mapper and serial-to-parallel convertor (S/P). The L-point IFFT then creates a time domain L-vector **x** that is cyclic extended to have length (1+G), where G is the fractional overhead.

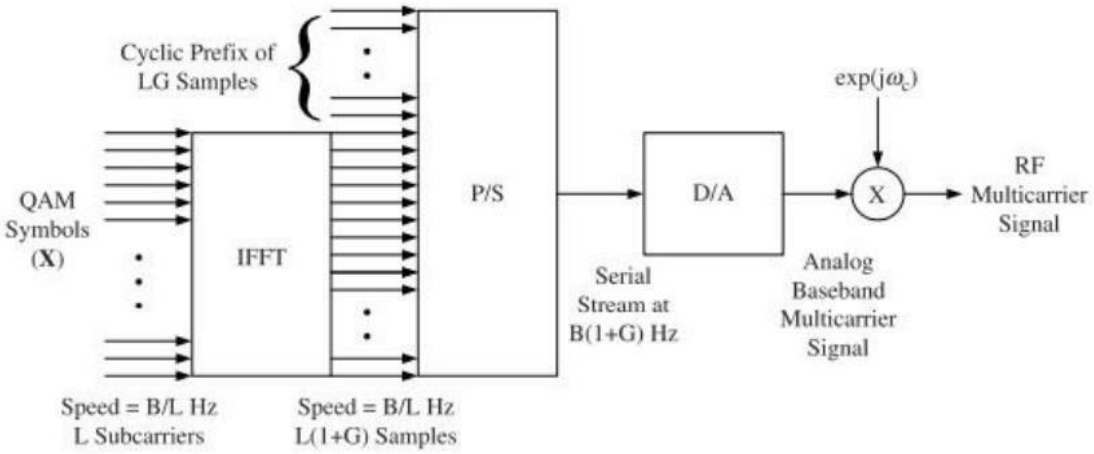

Fig. 4.13: A close-up of the OFDM baseband to pass band transmitter.

Table 4.1: summary of Key OFDM parameters in LTE and example values for 10MHz

Symbol	Description	Relation	Example LTE value
B	Nominal bandwidth	B=$1/2f_s$	7.68MHz
B_{chan}	Transmission bandwidth	Channel spacing	10MHz
L	No. of subcarriers	Size of IFFT/FFT	1024
G	Guard fraction	% of L of CP	0.07
L_d	Data subcarriers	L-pilot/null subcarriers	600
Δf	Subcarrier spacing	Independent of L	15KHz
T_s	Sample time	$T_a = \frac{1}{\max(B)} = \frac{1}{\Delta f}.2048$	1/15KHz.2048 =32.55 nsec
N_g	Guard symbols	$N_g = GL$	72
T_g	Guard time	$T_g = 144T_a or\ 160T_a$	$4.7\ or\ 5.2\ \mu sec$
T	OFDM symbol time	$T = (L + N_{g)}/B$	$142.7\mu sec$

In LTE G = 0.07 for the normal cyclic prefix and grows to G=0.25 for the extended cyclic prefix.

This longer vector is then parallel-to serial (P/S) converted into a wideband digital signal that can be amplitude modulated with a single radio at a carrier frequency of fc= $w_c/2\pi$.

The key OFDM parameters are summarized in table4.1 along with some potential numerical values for these parameters. As an example, if 16-QAM modulation was used (M = 16) with the normal cyclic prefix, the aw (neglecting coding) data rate of this LTE system

$$R=\frac{B}{L}\ \frac{L_d log_2(M)}{1+G} \ldots\ldots\ldots\ldots\ldots (4.12)$$

$$R=\frac{10^7 MHz}{1024}\ \frac{600 log_2(16)}{1.07} = 21.9 Mbps \ldots\ldots (4.13)$$

In other words, there are L_d = 600 data-carrying subcarriers of bandwidth *B/L,* each carrying log (M) bits of data. An additional overhead penalty of (1+G) must be paid for the cyclic prefix, since it consists of redundant information and sacrifices the transmission of actual data symbols.

4.10. Timing and Frequency Synchronization,

In order to demodulate an OFDM signal, there are two important synchronization tasks that need to be performed by the receiver.

First, the timing offset of the symbol and the optimal timing instants need to be determined. This is referred to as **timing synchronization**.

Second, the receiver must align its carrier frequency as closely is possible with the transmitted carrier frequency: This is referred to as ***frequency synchronization***. Compared to single-currier systems, the timing synchronization requirements for OFDM are in fact somewhat relaxed, since the OFDM symbol structure naturally ac accommodates a reasonable degree of synchronization error. On the other hand, frequency synchronization requirements are significantly more stringent, since the orthogonality of the data symbols is reliant on their being individually discernible in the frequency domain.

A representation of an OFDM symbol in time (top) und frequency (bottom). In the time domain, the IFFT effectively modulates each data symbol onto a unique carrier frequency: only two of the carriers are shown—the actual transmitted signal is the superposition of all the individual curriers. Since the time window is T = 1sec and a rectangular window is used, the frequency response of each subcarrier becomes a "Sine" function with zero Crossings every 1/T = 1MHz. This can be confirmed using the Fourier Transform F{.} since

$$F\left\{\cos(2\pi f_c t).rect\left(\frac{t}{T}\right)\right\} = F\{\cos(2\pi f_c t)\} * F\left\{rect\left(\frac{2t}{T}\right)\right\} \ldots\ldots\ldots\ldots (4.14)$$

$$= \mathrm{sinc}(T(f - f_c)) \ldots\ldots\ldots\ldots\ldots\ldots\ldots\ldots\ldots\ldots (4.15)$$

Where rect (x) = 1. x € (-0.5, 0.5), and zero elsewhere.

This frequency response is shown for L=8 subcarriers in the bottom part of figure 4.14.

The challenge of timing and frequency synchronization can be appreciated by inspecting these two figures. If the timing window is slid to the left or right, a unique phase change will be introduced to each

of the subcarriers.

In the frequency domain, if the carrier frequency synchronization is perfect, the receiver samples at the peak of each subcarrier, where the desired subcarrier amplitude is maximized and the inter-carrier interference (ICI) is zero.

4.10.1. Timing Synchronization:

The effect of timing errors in symbol synchronization is somewhat relaxed in OFDM due to the presence of a cyclic prefix.

We assumed that only the L time domain samples after the cyclic prefix were utilized by the receiver.

Indeed, this corresponds to "perfect timing synchronization, and in this case even if the cyclic prefix length N_g. is equivalent to the length of the channel impulse response v, successive OFDM symbols can be decoded ISI free.

In the case that perfect synchronization is not maintained, it is still possible to tolerate a timing offset of τ secondswithout any degradation in performance as long as $0 \leq \tau \leq T_g - T_m$,where as usual $T_g$is the guard time (cyclic prefix duration) and $T_m$is the maximum channel delay spread.

Here, $\tau < 0$ corresponds to sampling earlier than at the ideal instant, whereas $\tau > 0$is later than the ideal instant.

As long as $0 \leq \tau \leq T_g - T_m$, the timing offset simply results in a phase shift per subcarrier of exp(-j$\Delta f \tau$), which is fixed for all subcarriers.

As long as τremains constant, the channel estimator simply includes it as part of a fixed phase offset and it can be corrected by the FEQ without any loss in performance.

This acceptable range of τ is referred to as timing synchronization margin, and is shown in figure 4.15.

If the timing offset $\tau$is not within this window $0 \leq \tau \leq T_m - T_g$,

, the SNR loss can be approximated by

$$\Delta SNR(\tau) \approx -2\left(\frac{\tau}{LT_s}\right)^2 \ldots\ldots\ldots\ldots\ldots\ldots\ldots\ldots\ldots\ldots\ldots.(4.16)$$

From the above equation (4.16)

- SNR decreases quadratically with the timing offset.
- Longer OFDM symbols are increasingly immune from timing offset, that is, more subcarriers helps.
- Since in general $\tau \ll LT_s$ timing synchronization errors not that critical as long as the induced phase change is corrected.

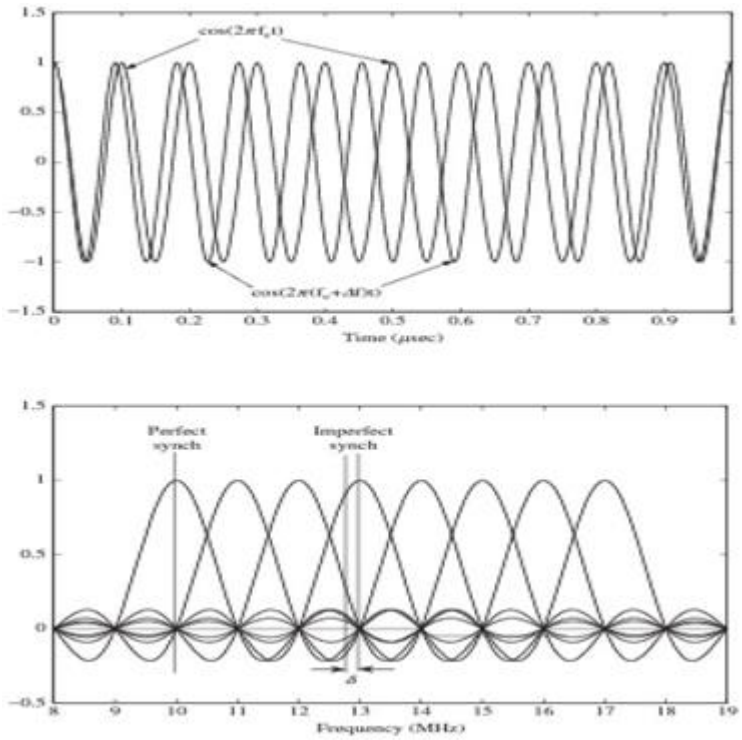

Figure 4.14: OFDM synchronization in time (top) and frequency (bottom) domain. Here, **two subcarriers** in the **time domain** and **eight subcarriers in the frequency domain** are shown, where **fc = 10MHz** and the **subcarrier spacing Δf = 1Hz**.

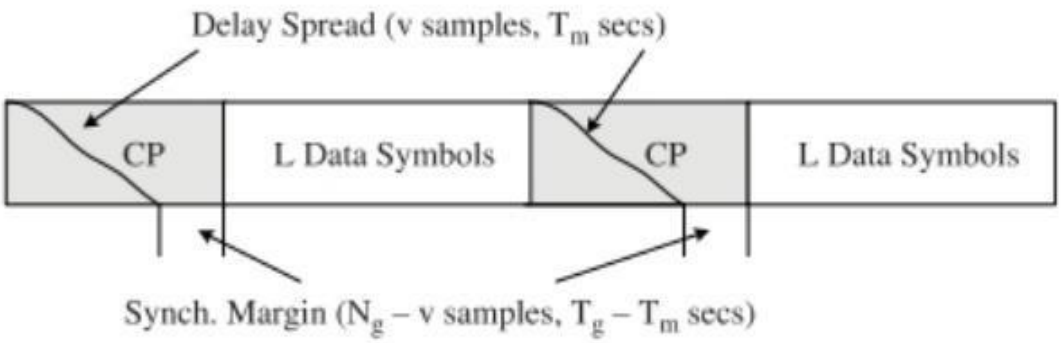

Fig.4.15: Timing synchronization margin OFDM is actually less sensitive to timing synchronization error that single carrier modulation, assuming a bit of margin is allowed in the cyclic prefix.

4.10.2. Frequency Synchronization

OFDM achieves a high degree of bandwidth efficiency compared to other wideband systems.
The subcarrier packing is extremely tight compared to conventional modulation techniques, which require

a guard band on the order of 50% or more, in addition to special transmitter architectures such as the **weaver architecture** or **single-sideband modulation** that suppress the redundant negative-frequency portion of the passband signal.
The price to be paid for this bandwidth efficiency is that the multicarrier signal shown in Figure 4.14 is very sensitive to frequency offsets due to the fact that the subcarriers overlap, rather than having each subcarrier truly spectrally isolated.

We'll now analyze this **inter-carrier interference (ICI)** in order to better understand its effect on OFDM performance.

The matched filter receiver corresponding to subcarrier "*l*" can be simply expressed for the case of rectangular windows (neglecting the carrier frequency):

$$x_l(t) = X_l e^{j\frac{2\pi lt}{LT_s}} \ldots\ldots\ldots\ldots\ldots\ldots\ldots\ldots(4.17)$$

Where $1/LT_s$=Δf, and $LT_s$is the duration of the data portion of the OFDM symbol, that is $T = T_g + LT_s$. An interfering subcarrier m can be written as

$$x_{l+m}(t) = X_m e^{j\frac{2\pi(l+m)t}{LT_s}} \ldots\ldots\ldots\ldots\ldots\ldots\ldots\ldots(4.18)$$

If the signal is demodulated with a fractional frequency offset of $\delta, |\delta| \leq \frac{1}{2}$

$$\hat{x}_{l+m}(t) = X_m e^{j\frac{2\pi(l+m+\delta)t}{LT_s}} \ldots\ldots\ldots\ldots\ldots\ldots\ldots\ldots(4.19)$$

The ICI between subscriber's *l* and *l*+*m* using a matched filter (i.e., the FFT) is simply the inner product between them:

$$I_m = \int_0^{LT_s} x_l(t)\hat{x}_{l+m}(t)dt = \frac{LT_s X_m(1-e^{-j2\pi(\delta+m)})}{j2\pi(m+\delta)} \ldots\ldots\ldots\ldots\ldots\ldots(4.20)$$

It can be seen that in the above expression, $\delta = 0 => I_m, and\ m = 0 => I_m = 0$, as expected.
The total average ICI energy per symbol on subcarrier *l*isthen

$$ICI_l = E\left[\sum_{m\neq l} |I_m|^2\right] \approx C_0(LT_s\delta)^2\varepsilon_x \ldots\ldots\ldots\ldots\ldots\ldots\ldots\ldots(4.21)$$

Where
$C_0$is a constant that depends on various assumptions.
$\varepsilon_x$is the average symbol energy

The SNR loss induced by frequency offset is given by

$$\Delta SNR = \frac{\varepsilon_x/N_0}{\varepsilon_x/N_{0+}(C_0(LT_s\delta)^2\varepsilon_x)} \ldots\ldots\ldots\ldots\ldots(4.22)$$

$$= 1+C_0(LT_s\delta)^2 SNR \ldots\ldots\ldots\ldots\ldots(4.23)$$

- By observing the equation (4.22) and (4.23) the important points are
- SNR decreases quadratically with the frequency offset.
- SNR decreases quadratically with the number of subcarriers.
- The loss in SNR is also proportional to the SNR itself.

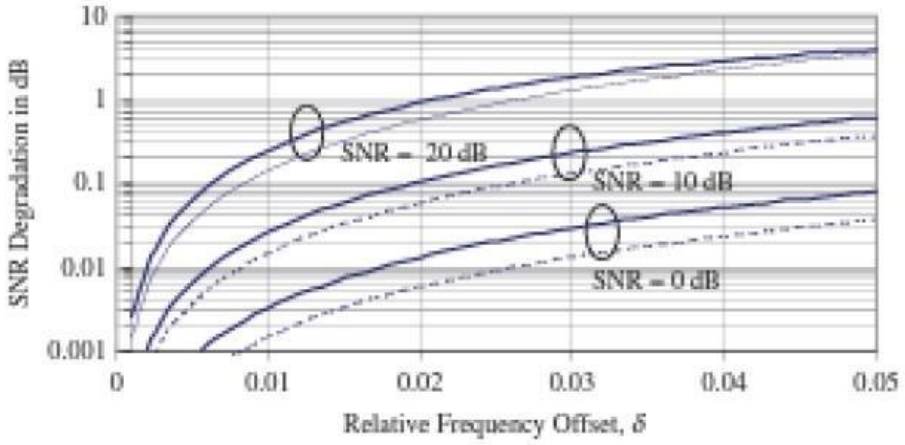

Fig.4.16: SNR loss a function of frequency offset δ, relative to the subcarrier spacing. The solid lines are for a fading channel and dotted lines are for an AWGN channel.

4.11. Peak to Average Ratio,

The Peak-to-Average Ratio (PAR)

OFDM signals have a higher peak-to-average ratio (PAR) often called a peak-to-average power ratio (PAPR) than do single-carrier signals.

The reason for this is that in the time domain, a multicarrier signal is the sum of many narrowband signals.

At some times, this sum is large at other times it is small, which means that the peak value of the signal is substantially larger than the average value.

4.11.1 The PAR Problem

When a high-peak signal is transmitted through a nonlinear device such as a high-power amplifier (HPA) or digital-to-analog converter (DAC), it generates out-of-band energy (spectral regrowth) and in-band distortion (Constellation tilting and scattering).

Thesedegradations may affect the system performance severely.
The nonlinear behavior of HPA can be characterized by amplitude modulation/amplitude modulation (AM/AM) and amplitude modulation/phase modulation (AM/PM) responses.
The input backoff (IBO) is defined as

$$IBO = 10\log_{10}\frac{P_{insat}}{\bar{P}_{in}} \ldots\ldots\ldots\ldots\ldots\ldots\ldots\ldots\ldots\ldots\ldots..(4.24)$$

Where P_{inSat} is the saturation power (above which is the nonlinear region) and
$\overline{P}_{in}$is the average input power.
the amount of backoff is usually greater that or equal to the PAR of the signal.

Operation in the linear region is required in order to avoid distortion, so the peak value must be constrained to be in this region, which means that on average, the power amplifier is under-utilized by a "backoff" amounts.

The **power efficiency** of an HPA can be **increased by reducing the PAR of the transmitted signal**. For example, the **efficiency of class A amplifier** is halved when the input PAR is doubled or the operating point (average power).

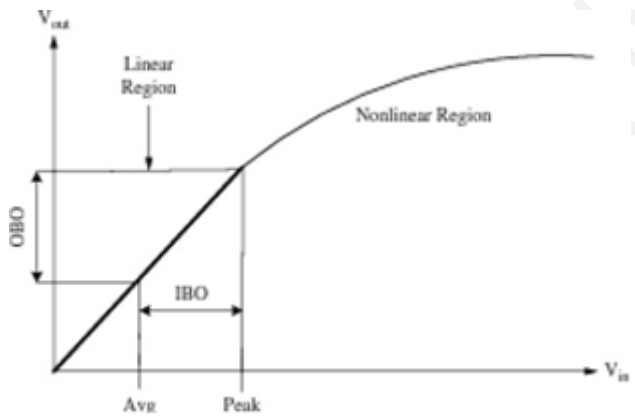

Fig. 4.16: A typical power amplifier response.

In addition to the large burden placed on the HPA, a high PAR requires high resolution for both the transmitter's digital-to-analog convertor (DAC) and the receiver's

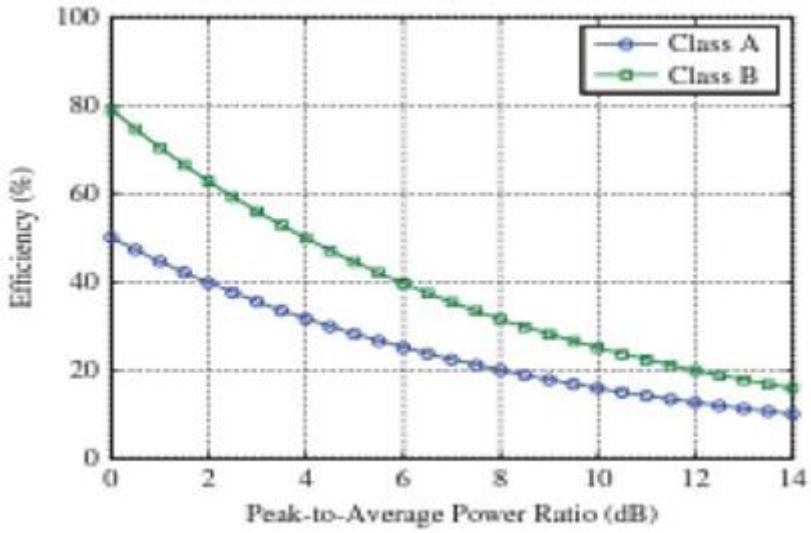

Fig. 4.17: Theoretical efficiency limits of linear amplifiers

4.11.2 Quantifying the PAR

Since multicarrier systems transmit data over a number of parallel frequency channels the resulting waveform is the superposition of L narrowband signals.

In particular, each of the L output samples from an L-point IFFT operation involves the sum of L complex numbers.

Due to central limit theorem, the resulting output values $\{\boldsymbol{x_1}, \boldsymbol{x_2}, \ldots\ldots\ldots. \boldsymbol{x_L}\}$can be modeled as complex Gaussian random variables with zero mean and variance $\boldsymbol{\sigma^2 = \varepsilon_x/2}$.

The amplitude of the ouput signal is

$$|\boldsymbol{x[n]}| = \sqrt{(\boldsymbol{R}\{\boldsymbol{x[n]}\})^2 + (\boldsymbol{I}\{\boldsymbol{x[n]}\})^2} \ldots\ldots\ldots. (\mathbf{4.25})$$

Where R and I give the real and imaginary parts.

$$\{\boldsymbol{x[n]}\}^2 = (\boldsymbol{R}\{\boldsymbol{x[n]}\})^2 + (\boldsymbol{I}\{\boldsymbol{x[n]}\})^2 \ldots\ldots\ldots. (\mathbf{4.26})$$

Which is exponentially distributed with mean $\mathbf{2\sigma^2}$.

The PAR of the transmitted analog signal can be defined as

$$\boldsymbol{PAR} \triangleq \frac{\boldsymbol{max}|\boldsymbol{x(t)}|^2}{\boldsymbol{E}[|\boldsymbol{x(t)}|^2]} \ldots\ldots\ldots. (\mathbf{4.27})$$

4.11.3 Clipping and Other PAR Reduction Techniques

In order to avoid operating the Power Amplifier in the nonlinear region, the input power can be reduced up to an amount about equal to the PAR.
This, of course, is very inefficient and will reduce the range and/or SNR of the system by the same amount.
First, since the highest PAR values are uncommon, it might be possible to simply "clip" off the highest peaks, at the cost of some hopefully minimal distortion of the signal.

Second and conversely, it can be seen that even for a conservative choice of IBO, say 10 dB, there is still a distinct possibility that given OFDM symbol will have a PAR that exceeds the IBO and causes clipping.

Clipping, sometimes called "soft limiting," truncates the amplitude of signals that exceedthe clipping level as

$$\tilde{x}[n] = \begin{cases} Ae^{j\angle x[n]} & if\ |x[n]| > A \\ x[n], & if\ \ |x[n]| \leq A, \end{cases} \ldots\ldots\ldots. (4.28)$$

Where $x[n]$is the original signal, $\tilde{x}[n]$, is the output after clipping, A is the clipping level.

The clipping ratio can be used as a metric and is defined as

$$\gamma \triangleq \frac{A}{\sqrt{E\{|x(n)|^2\}}} = \frac{A}{\sqrt{\varepsilon_x}} \ldots\ldots\ldots\ldots\ldots\ldots (4.29)$$

Obviously, clipping reduces the PAR at the expense of distorting the desired signal.

The two primary drawbacks from clipping are (1) **spectral regrowth** (frequency domain leakage), which causes unacceptable interference to users in neighboring RF channels, and (2) **distortion of the desired signal.**

The spectral Regrowth: The clipping noise can be expresses in frequency domain.

The clipped frequency domain signal $\tilde{X}$ is

$\tilde{X}_k = X_k + C_k$ k=0,…….L-1… … …. (4.30)

where c_k represents the clipped off signal in the frequency domain.

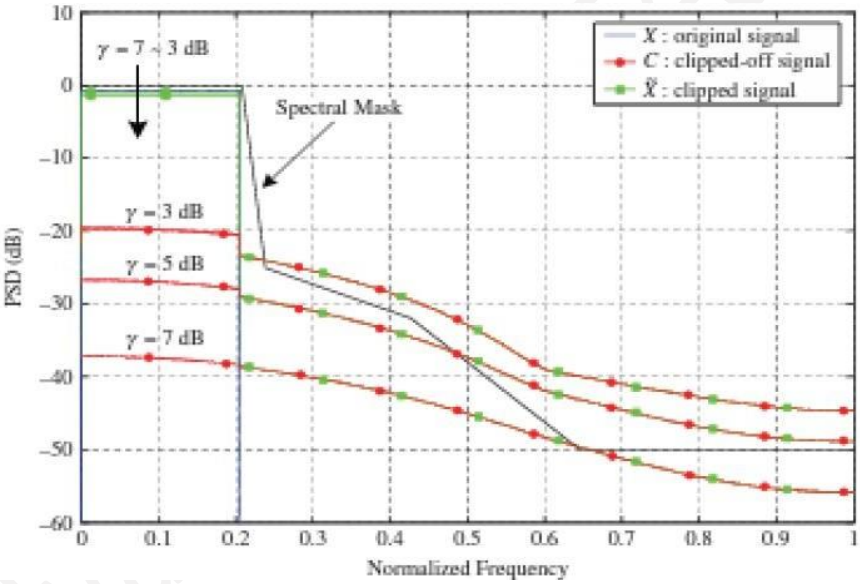

Fig. 4.18: Power spectral density (PSD) of the unclipped (original) and clipped (nonlinearity distorted) OFDM signal with 2048 block size and 64 QAM when clipping ratio (γ) is 3,5 and 7 dB in soft timer.

In Figure 4.18, the power spectral density of the original (X), clipped ($\tilde{X}$), und clipped-off (C) signals are plotted for different clipping ratios γ of 3, 5, and 7 dB. The following deleterious effects are observed.

Attenuation of the desired signal,

$\bar{x}[n] = \alpha x[n] + d[n]$, for n=0, 1, ……. L-1 … … …. (4.31)

Now, d[n] is uncorrelated with the signal x[n] and the attenuation factor α is obtained by

$$\alpha = 1 - e^{-\gamma^2} + \frac{\sqrt{\pi\gamma}}{2}\, erfc(\gamma) \ldots\ldots\ldots\ldots\ldots\ldots\ldots\ldots\ldots\ldots (4.32)$$

The attenuation factor a is plotted in Figure is a function of the clipping ratio. The attenuation factor a is negligible when the clipping ratio a is greater than 8 dB, so for high clipping ratios,
Gaussian input x[n] as

$$\alpha_d^2 = \varepsilon_x(1 - \exp(-\gamma^2) - \alpha^2) \ldots\ldots\ldots\ldots\ldots\ldots\ldots\ldots (4.33)$$

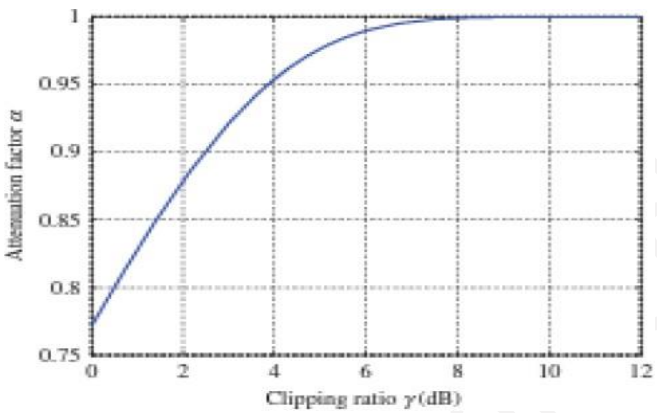

Fig. 4.19: Attenuation Factor αas a function of the clipping ratio γ

input and channel noise (that has variance $N_0/2$):

$$SNDR = \frac{\alpha^2 \varepsilon_x}{\alpha_d^2 + N_0/2} \ldots\ldots\ldots (4.34)$$

The bit-error probability (BEP) can be evaluated for different modulation types using the SNDR [12]. In the case of M-QAM and average power & the BEP can then be approximated as

$$P_b \approx \frac{4}{\log_2 M}\left(1 - \frac{1}{\sqrt{M}}\right) Q\left(\sqrt{\frac{3\varepsilon_x \alpha^2}{(\sigma_d^2 + N_0/2)(M-1)}}\right) \ldots\ldots\ldots (4.35)$$

4.11.4. LTE's Approach to PAR in the Uplink

LTE has taken a pioneering new approach to PAR. In the downlink, PAR is less importantbecause the base stations are fewer in number and generally higher in cost, and so we

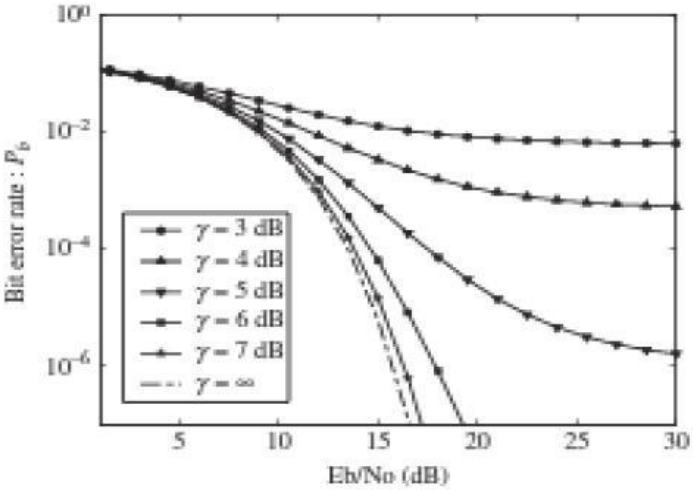

Fig.4.20: Bit error rate probability for a clipped OFDM signal

Typically, the high PAR is basically tolerated and sufficient input power back off is undertaken in order to keep the in-band distortion and spectral regrowth at an acceptable level.

4.12. Single Carrier-Frequency Domain Equalization (SC-FDE)

An alternative approach to OFDM is the less popular but conceptually similar single carrier frequency domain equalization (SC-FDE) approach to ISI suppression.

SC-FDE maintains OFDM's three most important benefits

- Low complexity even for severe multipath channels
- Excellent BER performance, close to theoretical bounds; and
- A decoupling of ISI from other types of interference, notably spatial interference, which is very useful when using multipleantenna transmission.

By utilizing single-carrier transmission, the peak-to-average ratio is also reduced significantly (by several dB) relative to multicarrier modulation.

4.12.1 SC-FDE System Description

Frequency domain equalization is used in both OFDM and SC-FDE systems primarily in order to reduce the complexity inherent to time-domain equalization.

The block diagrams for OFDM and SC-FDE are compared in below figure in which we can see that the only apparent difference between the two systems is that the **IFFT is moved to the end** of **the receive chain** rather than operating at the transmitter, to create a multicarrier waveform as in OFDM.

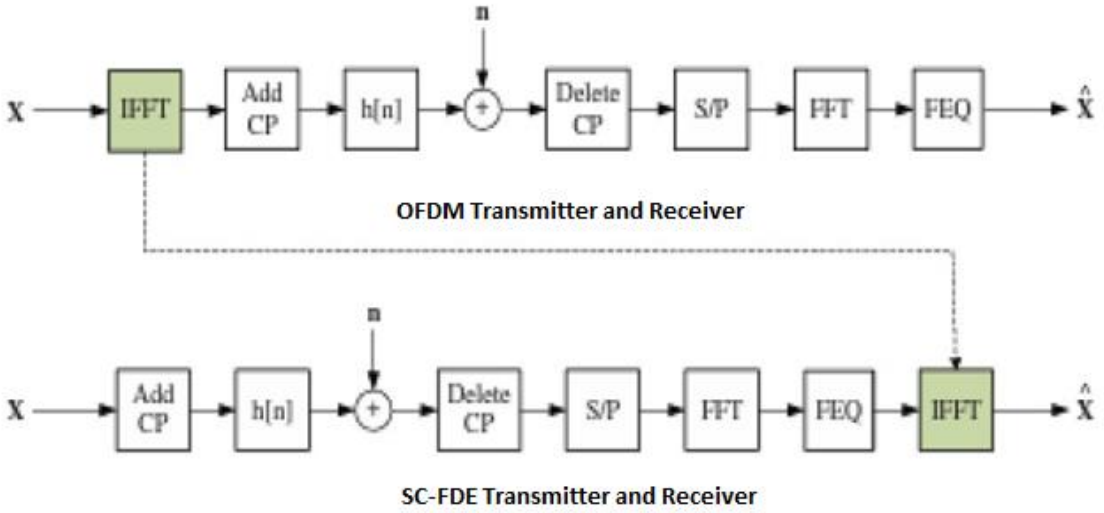

Fig.4.21: Comparison between an OFDM system and an SC-FDE system.

An SC-FDE system still utilizes al cyclic prefix at least as long as the channel delay spread, but now the transmitted signal is simply a sequence of QAM symbols, which have **low PAR, on the order of 4-5 dB** depending on the constellation size.
Considering that an **unmodulated** sine wave has a **PAR of 3 dB**, it is clear that the PAR cannot be lowered much below that of an SC-FDE system.

$$FF\{y[n]\} \cong Y[m] = H[m]X[m] + W[m] \;\ldots\ldots\ldots(\mathbf{4}.36)$$

just as in OFDM, with the important distinction being that now the frequency domainversion X [m] is not precisely the data symbols, but rather the FFT of the data symbols x[n]. Analogously, recall that in OFDM system the transmitted time-domain signal x[n] was not the actual data symbols, but rather the IFFT of the actual data symbols.

After FFT, a sample 1-tap FEQ can be applied that inverts each virtual subscriber, so that

$$\hat{X}[m] = \frac{Y[m]}{H[m]} \ldots\ldots\ldots\ldots\ldots(\mathbf{4}.37)$$

The resulting signal can then be converted back into the time domain using an IFFT operation to give in x[n], which are estimates of the desired data symbols.
Naturally, in practice *H[m]*must be estimated at the receiver using pilot signals or other standard methods

4.12.2. SC-FDE Performance vs. OFDM

The primary difference in terms of performance between SC-FDE and OFDM comes from the way they treat noise.
In both OFDM and SC-FDE receivers, the FEQ typically inverts each frequency bin, that is, the FEQ consists of L complex taps each of value $1/H_l$.

As noted earlier for OFDM does not result in damaging noise enhancement since the SNR of each data symbol is unchanged by multiplying by factor.

High SNR symbols remain at high SNR, and low SNR symbols remain at low SNR.

The discrepancies between the SNR on each carrier can be handled by either per-subcarrier adaptive modulation or coding and interleaving.

In LTE, short scale variations in SNR would generally be addressed by coding and interleaving, which would allow considerable number of degraded (low-SNR) symbols to be corrected.

In SC-FDE, however, the FEQ does not operate of data symbols themselves but rather on the frequency domain dual of the data symbols.

Therefore, just is in OFDM's FEQ, low SNR parts of the spectrum have their power increased by a factor of $|1/H_l|^2$ while the noisepower is increased by a factor of $|1/H^2_l|$

Unlike in OFDM, however, in SC-FDE when the ensuing IFFT is applied to move the signal back into the time domain for detection, the amplified noise is spread by the IFFT operation over all the data symbols.

Therefore, although the total noise amplification is the same in OFDM und SC-FDE, the noise amplification is not isolated to a single symbol in SC-FDE, but instead affects all the symbols prior to decoding and detection.

4.12.3. Design Considerations for SC-FDE and OFDM

Since the performance difference between SC-FDE and OFDM is not that significant, other considerations are more important in determining which is the appropriate method to use for a given application.

An obvious difference is that SC-FDE has a lower complexity transmitter but a higher-complexity receiver, compared to OFDM.

Since the receiver was already considerably more complex than the transmitter in a typical OFDM system due to channel estimation, synchronization, and the error correction decoder, this further skews the symmetry:

In a cellular system like LTE, this asymmetry can in fact be a favorable feature, since the uplink could utilize SC-FDE and the downlink could utilize OFDM.

In such a situation, the base station would therefore perform 3 IFFT/FFT operations and the mobile, which is more power- and cost-sensitive, would perform only a single FFT operation (to receive its OFDM waveform from the base station).

Adding in SC-FDE's benefits of reduced PAR and the commensurate cost and power savings, it appears that the case for using SC-FDE in the uplink of a wideband data system is favorable indeed.

Channel estimation and synchronization are a bit different in practice for an SC FDE System vs. an OFDM system.

In a typical wireless OFDM System—including LTE, WiMAX, und 802.11a/g/n channel estimation and

synchronization are accomplished via a preamble of known data symbols, and then pilot tones, which are inserted at known positions in all subsequent OFDM symbols.

Although SC-FDE systems would typically also include a preamble, this preamble is in the time domain so it is not as straightforward to estimate the frequency domain values H_l.

Similarly, it is not possible to insert pilot tones on a per-frame basis. As we will see, however, in next module we see that SC-FDMA overcomes these potential problems for LTE by using both a **DFT and an IFFT at the transmitter.**

4.13. Computational Complexity Advantage of OFDM and SC-FDE.

Advantage of frequency domain equalization relative to time domain equalization is that FDE whether in OFDM or SC-FDE systems- requires much lower computational complexity, especially for high data rates.

A time domain equalizer consists of series of multiplications with several delayed versions of signal.
The number of delay taps in an equalizer depends on the symbol rate of the system and the delay spread in the channel.
To be more precise, the number of the equalizer taps is proportional to the bandwidth-delay spread product $T_m/T_s \approx BT_m$. We have been calling this quantity v or the number of ISI channel taps.
An equaliser with v taps perform v complex multiply and accumulate (CMAC) operations per received symbols.
Therefore the complexity of an equalizer is of the order of

$$\boldsymbol{O(v.B) = O(B^2T_m)} \ldots\ldots\ldots (4.37)$$

In an OFDM or SC-FDE system, the IFFT and FFT are the principal computational operation.

It will be known that the IFFT and FFT each have a complexity of $O(L\log_2 L)$, Where L is the FFT of block size.

In case of OFDM, L is the number of subcarriers. For a fixed cyclic prefix overhead, the number of subcarriers L must grow linearly with the bandwidth delay spread product $v = BT_m$. Therefore the computational complexity for each OFDM symbol (or SC- FDE block) is of the order of $O(BT_m \log_2 BT_m)$.

There are B/L OFDM symbols sent each second. Since L $\alpha\, BT_m$this means there are order $O(1/T_m)$ OFDM symbol per second, so the computational complexity in terms of CM ACs for OFDM is

$$\boldsymbol{O(BT_m \log_2 BT_m)\ O(1/T_m) = O(B\log_2 BT_m)} \ldots\ldots\ldots (4.38)$$

The complexity of a time domain equalizer grows as a square of the data rate since both the symbol rate and the number of taps increases linearly with the data rate.

For an OFDM or a SC-FDE system, the increase in complexity grows with the data rate only slightly faster than linearly.

This difference is automatic for very large data rates as shown in figure.
It is noted here that LTE uses SC-FDMA, which is not same as SC-FDE.

The complexity of SC—FDMA still scales as $\boldsymbol{O(B\log_2 BT_m)}$, but there are twice as many FFT/IFFT operations as there are in SC-FDE.

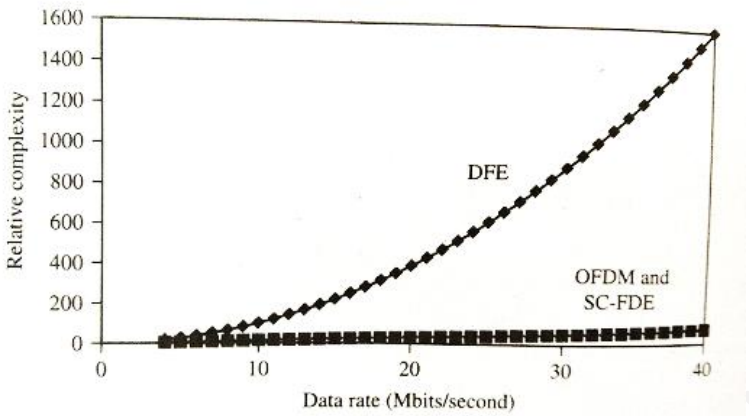

Fig.4.22. OFDM and SC-FDE have an enormous complexity advantages over equalization for broadband data rates.

The delay spread is $T_m = 2\mu sec$, the OFDM symbol period is T $20\mu sec$, 16 QAM (4 bps/Hz) is used, and the considered time-domain equalizer is a DFE.

SL No.	OFDM	SC-FDE
1.	OFDM provides high performance	Relatively less performance
2.	The high Peak-to-Average Power Ratio (PAPR) associated with OFDM	The low Peak-to-Average Power Ratio (PAPR) associated with SC-FDE
3.	SNR ratio of each data symbol is doesn't change by multiplyingconstant factor at receiver.	SNR ratio of each data symbol is changeby multiplying constant factor receiver.
4.	OFDM has a nominally less dispersive spectrum.	SC-FDE has a nominally more dispersive spectrum.
5.	OFDM's sharper spectrum results inless CCI (Common Channel Interference) and/or less restrictive RF roll-off requirements.	Due to dispersive spectrum results moreco-channel interference and/or more restrictive RF roll-off requirements.
6.	In OFDM, short-scale variations in SNR would generally be addressed by coding and interleaving.	In SC-FDE, however, the FEQ does not operate on data symbols themselves but rather on the frequency domain dual of the data symbols
7.	The noise amplification is isolated, hence it does not affects all the symbols prior to decoding and detection.	The noise amplification is not isolated to a single symbol in SC-FDE, but instead affects all the symbols prior to decoding and detection.
8.	On the whole, OFDM continues to be much more popular than SC-FDE	SC-FDE less popular than OFDM.

Text Books:

1. "Fundamentals of LTE" Arunabha Ghosh, Jan Zhang, Jefferey Andrews, Riaz Mohammed, Pearson education (Formerly Prentice Hall, Communications Engg and Emerging

Technologies), ISBN-13: 978-0-13-703311-9.

Sai Vidya Institute of Technology

Sai Vidya Institute of Technology