Wireless and CELLULAR COMMUNICATION (18EC81)

Module-5

LTE - 4G

OFDMA and SC-FDMA – Multiple Access for OFDM Systems, OFDMA, SCFDMA, Multiuser Diversity and Opportunistic Scheduling, OFDMA and SC-FDMA in LTE, OFDMA system Design Considerations. **(Text 1, Sec 4.1 – 4.6)**

The LTE Standard – Introduction to LTE, Hierarchical Channel Structure of LTE, Downlink OFDMA Radio Resources, Uplink SC-FDMA Radio Resources. **(Text 1, Sec 6.1 – 6.4)** **L1, L2, L3**

Frequency Domain Multiple Access: OFDMA and SC-FDMA

Multiple access strategy used in cellular communication

First Generation (IG), example AMPS (Advanced Mobile Phone Service): **FDMA**

Second Generation (2G) example 2G GSM or IS-54: **TDMA, CDMA**.

Third Generation (3G), example UMTS: **3G WCDMA.**

Fourth Generation (4G), example LTE: **OFDMA for down link, SC-FDMA for uplink**.

5.1. Multiple Accesses for OFDM Systems,

- OFDM has wide acceptance in wireless communications as an appropriate broadband modulation scheme.
- OFDM divides a wideband frequency-selective channel into narrowband flat fading sub-channels.
- In multi-user systems, these sub-channels can be allocated among different users to provide multiple access schemes
- The use of adaptive techniques in these sub-channels can further increase the spectral efficiency of the wireless system.
- Therefore, a main advantages of OFDM is the flexibility in combining adaptive modulation and multiple access techniques

  Multiple-access strategies typically attempt to provide non-interfering, communication channels for each active base station-subscriber link.
- OFDM is a technique to overcome frequency selectivity (inter symbol Interference).
- OFDM create many parallel streams of data that can principle be used by different users.
- OFDM system such as DSL, 802.11a/g/WiMAX uses single user.

- For example 802.1 a/g WiFi systems, nearby users share the 20MHz bandwidth by transmitting at different time after contending for the channel.
- OFDM accommodated by time sharing the channel.

5.1.1. Multiple-Access Overview

The most common ways to divide the available channel among the multiple users is through

- ***Frequency Division Multiple Access (FDMA):*** Each user receives a unique carrier frequency and bandwidth.
- ***Time Division Multiple Access (TDMA):*** Each user is given a unique time slot, either on demand or in a fixed rotation.
- ***Code Division Multiple Access (CDMA):*** Systems allow each user to share both the bandwidth and time slots with many other users.

TDMA, FDMA, and orthogonal CDMA all have the almost same theoretical capacity in an additive noise channel.

- ***Limitation of above multiple access:***
- FDMA, TDMA, CDMA are bandwidth or interference limited system.
- Orthogonality is not possible in **dense wireless systems**.
- The above techniques only guarantee orthogonality between users in the same cell.
- Different multiple access techniques have different delay characteristics and so may be appropriate for different types of data.
- ***Conclusion:*** The above limitation of conventional multiple access can be mitigated by principle merits of OFDMA.

5.1.2. Random Access Vs. Multiple Access

- CSMA-Carrier Sense Multiple Access
- Used in Packet based communication System eg., Ethernet and wireless LAN such as 802.11.
- In random access, users contend for the channel, rather than being allocated a reserved time, frequency, or code resource. Eg., ALOHA, SLOTTED ALOHA, CSMA.
- In ALOHA users simply transmit packets at will without regard to the other users. If the packet is not acknowledged by the receiver after some period, it is assumed and is retransmitted.
- ALOHA is an inefficient method and delay is more as intensity of the traffic increases, as many transmission result in collision and hence retransmission.
- SLOTTED ALOHA overcomes the problem of ALOHA by a factor of two since users transmits on specified time boundaries hence collision reduces.
- CSMA improves upon **ALOHA, SLOTTED ALOHA** through carrier sensing, in which users listen to the channel before transmitting in order to avoid collision.
- CSMA uses **Distributed coordination function (DCF)** of 802.11 in which user waits for a random amount

of time after the channel is clear before transmitting in order to reduce the probability to two stations transmitting immediately after the channel becomes available

- The random access tends to be inefficient, systems sophisticated enough to have a frequency and code slots generally opt for coordinated multiple access, rather than random access

5.1.3. Frequency Division Multiple Access (OFDM-FDMA)

- Frequency Division Multiple Access (FDMA) can be readily implemented in OFDM systems by assigning different users their own sets of subcarriers.
- Available sub-carriers are distributed among all the users for transmission at any time instant
- Each user is allocated a pre-determined band of subcarriers. Allows adaptive techniques per sub-carrier, based on sub-channel condition.

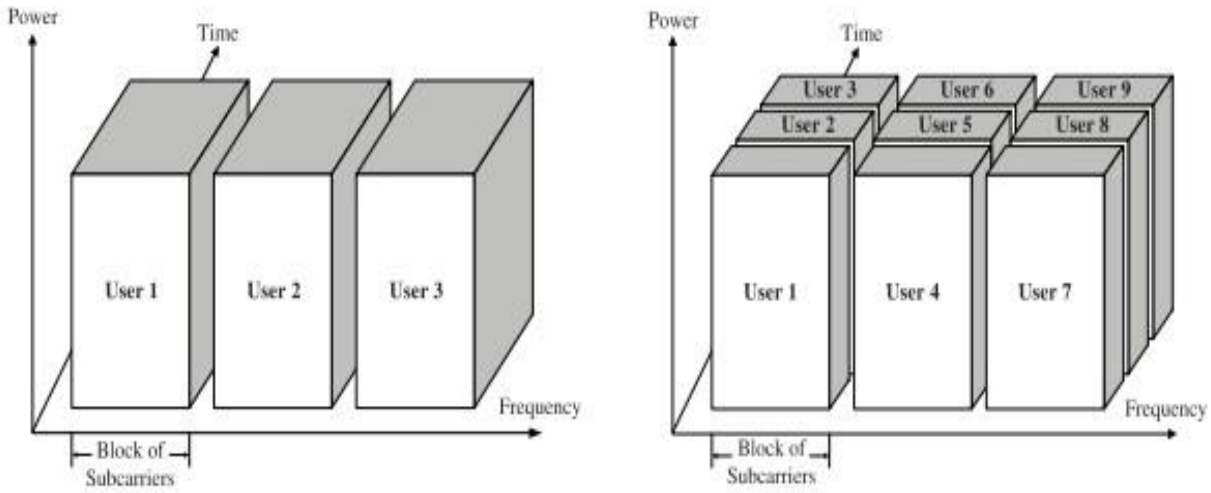

Fig. 5.1. FDMA (left) and a combination of FDMA with TDMA (right)

- The simplest method is a static allocation of subcarriers to each user, as shown on the left of figure 5.1. For example, in a 64-subcarrier OFDM system, user 1 could take subcarriers 1-16, with users 2, 3, and 4 using subcarriers 17-32, 33-48, and 49-64, respectively.
- The allocations are enforced with a multiplexer for the various users before the IFFT operation.
- OFDMA in LTE, however, has explicit time-sharing and procedures to allow for the dynamic allocation of subcarriers.
- In LTE use dynamic subcarrier allocation based upon channel state conditions. For example, due to frequency selective fading, user 1 may have relatively good channels on subcarriers 33- 48, while user 3 might have good channels on subcarriers 1-16. Obviously, it would be mutually beneficial for these users to swap the static allocations

5.1.4. Time Division Multiple Access (OFDM-TDMA)

- A particular user is given all the sub-carrier of the system for any particular symbol duration.
- Each user is assigned a time slot during which all the sub-carriers can be used for the particular user

- Adaptive loading can be performed on all the subcarriers, depending on channel conditions.
- The number of symbols per frame can be varied based on each user's requirement.
- Power consumption reduction (less activity). Degrading performance should be taken into account in delay constrained systems.
- A packet-based system like LTE can employ more sophisticated scheduling algorithms based on queue-lengths, channel conditions, and delay constraints to achieve much better performance than static TDMA.

5.1.5. Code Division Multiple Access (OFDM-CDMA or MC-CDMA)

- User data is spread over several sub-carriers and/or OFDM symbols using spreading codes, and combined with signals from other users. OFDM and CDMA are shown in fig. 5.2.
- Hybrid access scheme that combines benefits:
- OFDM: Provides a simple method to overcome the ISI effect of the multi-path frequency selective channel
- CDMA: Provides frequency diversity and multi-user access scheme
- Several users transmit over the same sub-carriers.
- In wireless broadband networks the data rates already are very large, so spreading the spectrum further is not viable.
- OFDM and CDMA are not fundamentally incompatible; they can be combined to create a Multicarrier CDMA (MC-CDMA) waveform. MC-CDMA is not part of the LTE standard

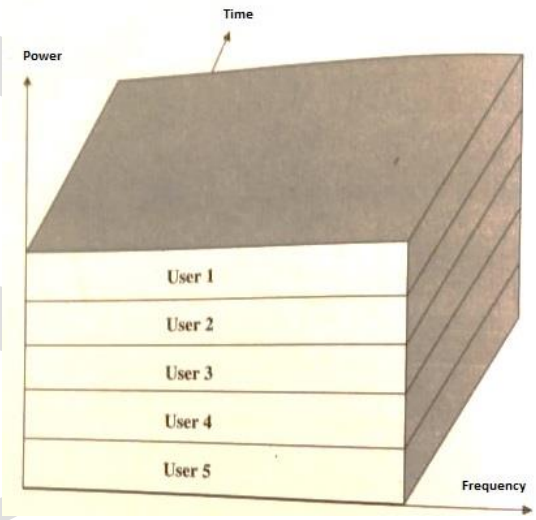

Fig.5.2. OFDM and CDMA

The advantages and disadvantages in multiple types is shown in table 5.1

5.2. Orthogonal Frequency Division Multiple Access (OFDMA)

OFDMA systems allocate subscribers time-frequency slices (in LTE, "resource grids").

- A resource block (RB) is the smallest unit of resources that can be allocated to a user.

- It consisting of M subcarriers over some number of consecutive OFDM symbols in time.

The M subcarriers can either be

- Spread out over the band, It often called a "distributed," "comb," or "diversity" allocation or Bunched together in M contiguous subcarriers which is often called a "band AMC," "localized," or "grouped" cluster.
- The distributed allocation achieves frequency diversity over the entire band, and would typically rely on interleaving and coding to correct errors caused by poor subcarriers.
- In a highly mobile system, then a distributed allocation would typically be preferred in order to maximize diversity.
- The band AMC mode, instead attempts to use subcarriers where the SINR is roughly equal and to choose the best coding and modulation scheme for that SINR.
- If accurate SINR information can be obtained at the receiver about each band's SINR, then band AMC outperforms distributed subcarrier allocation.

Table 5.1 Advantages and disadvantages in multiple types

Multiple types	Advantages	Disadvantages
OFDM_TDMA	Simple implementation Flexibility	Frequency-reuse factor ≥ 3
OFDM_FDMA	Power savings Simple resource allocation Easiest to implement	Relatively high latency Frequency-reuse factor ≥ 3 Lowest flexibility
OFDM_CDMA	Spectral efficiency Frequency diversity MAI and ICI interference resistance Frequency-reuse factor = 1 Highest flexibility	Requirement of powercontrol Implementation complexity

-
-

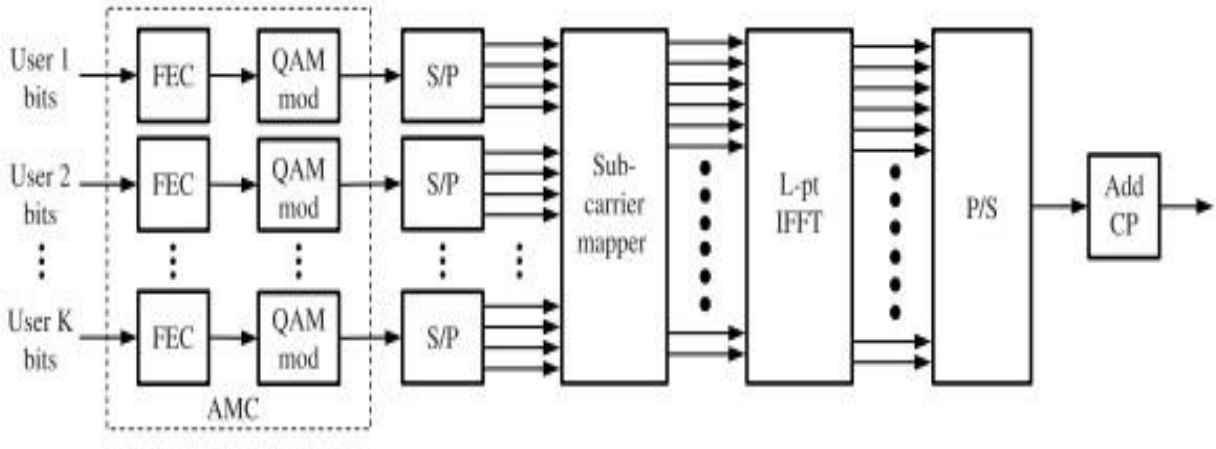

Fig.5.3. OFDMA downlink transmitter

The Table 4.2 shows the notations used in OFDMA

Table 5.2 OFDMA notations

Symbol	Explanation
K	Number of Active users
L	Total number of **subcarriers**
M_k, M	Number of **subcarriers per active user k**
$h_{k,l}$	Envelope of the **channel gain** for user k in subcarrier l
$P_{k,l}$	Transmit power allocated for user k in subcarrier l
σ^2	**AWGN power spectrum density**
P_{tot}	Total **transmit power** available at the base station
B	Total **transmission bandwidth**

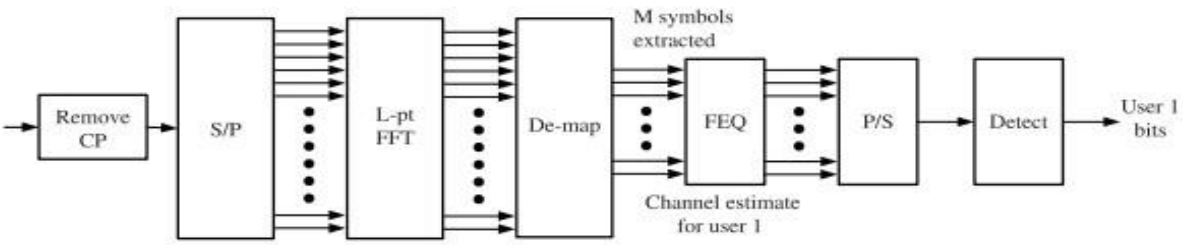

Fig. 5.4. OFDMA downlink receiver for user 1.

5.2.1. OFDMA Working

- The block diagram of downlink OFDMA transmitter and receiver is shown in figure 5.3 and 5.4 respectively.
- Each of the K active users—who by design have orthogonal subcarrier assignments—have a different receiver that only detects the Mk subcarriers intended for it
- In theory it is possible to have users share subcarriers, this never occurs in practice, so $\sum_k M_k = L$ and each

subcarrier only has one user assigned to it.

- At each receiver, the user cares only about its own M_k subcarriers, but still has to apply an L point FFT to the received digital waveform in order to extract the desired subset of subcarriers.
- Receiver has to know which **time-frequency resources** it has been allocated in order to extract the **correct subcarriers:** the control signaling that achieves.
- OFDMA **downlink receiver must mostly demodulate the entire waveform**, which wastes power, but digital separation of users is simple to enforce at the receiver and the amount of residual inter user interference is very low compared to either CDMA or FDMA.

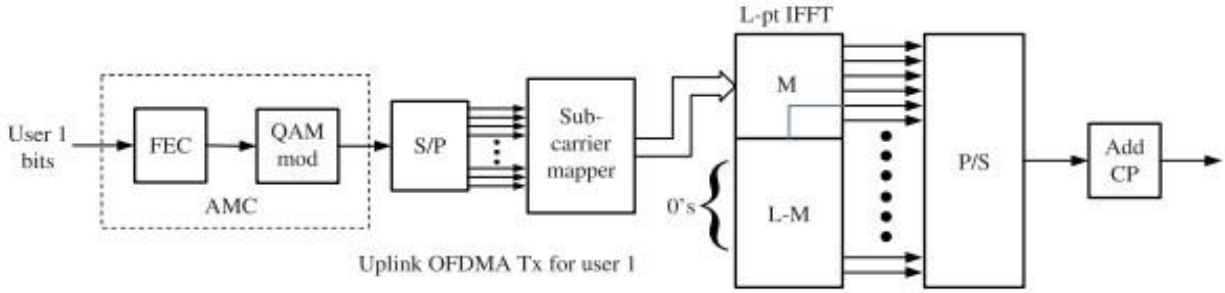

Fig. 5.5. OFDMA uplink transmitter for user 1, where user 1 is allocated subcarriers 1,2….M of L total subcarriers. [Adaptive modulation and coding]

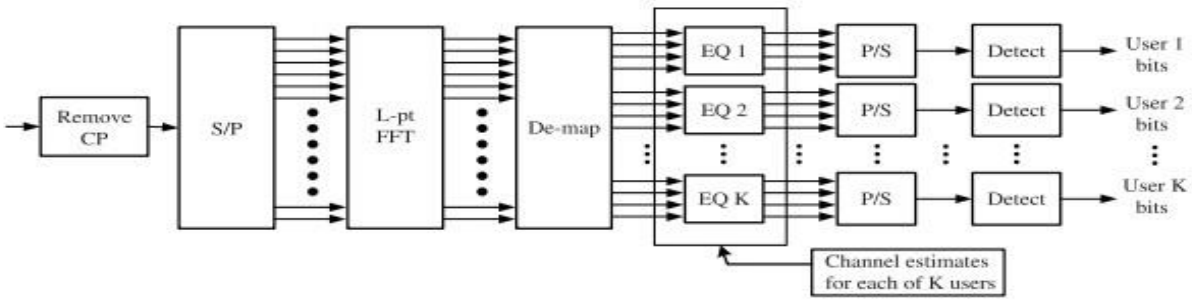

Fig.5.6. OFDMA uplink receiver. All K active users-who by design have orthogonal subcarrier assignments—are aggregated at the receiver and demultiplexed after the FFT. [EQ-equalizer]

OFDMA is not used in the LTE uplink. The block diagram of uplink OFDMA transmitter and receiver is shown in figure 5.5 and 5.6 respectively.

- The transmitter modulates user $k's$ bits over just the M_k subcarriers of interest: in this case, we have chosen $M_k = M$ for all users, and shown user 1 occupying subcarriers 1,2, • • , M of the L total subcarriers.
- All the users' signals collide at the receiver's antenna, and are collectively demodulated using the receiver's FFT.
- Assuming each subcarrier has only a single user on it, the demodulated subcarriers can be de-mapped to the detectors for each of the K served users.

- It should be noted that uplink OFDMA is considerably more challenging than downlink OFDMA since the uplink is naturally asynchronous, that is the users' signals arrive at the receiver offset slightly in time (and frequency) from each other.
- This is not the case in the downlink since the transmitter is common for all users. These time and frequency offsets can result in considerable self-interference if they become large.
- Particularly in the distributed subcarrier mode, sufficiently large frequency offsets can severely degrade the orthogonality across all subcarriers.
- The timing offsets also must typically be small, within a fraction of a cyclic prefix.
- In LTE the uplink multi access scheme uses only the localized subcarrier mode due to the SC-FDMA nature of the uplink.
- In this case, the lack of perfect frequency and time synchronization between the multiple users leads to some ICI **(Inter Channel Interference)** but this is limited only to the subcarriers at the edge of the transmission band of each user.
- Frequency and timing synchronization for the uplink is achieved relative to the downlink synchronization, which is done using the synchronization channels.
- A higher level view of **OFDMA** can be seen in figure 5.7 Here, a base station is transmitting a band **AMC-type OFDMA** waveform to four different devices simultaneously.
- The three arrows for each user indicate the signalling that must happen in order for band AMC-type OFDMA to work.
- First, the mobiles measure and feedback the quality of their channel, or **channel state information** (CSI) to the base station.
- Usually, the **CSI feedback** would be a measurement corresponding to SINR.
- The base station would then allocate subcarriers to the four users and send that subcarrier allocation information to the four users in an overhead message.
- Finally, the actual data is transmitted over the Subcarriers assigned to each user.
- Here, it can be seen that the base station was successful in assigning each user a portion of the spectrum where it had a relatively strong signal.

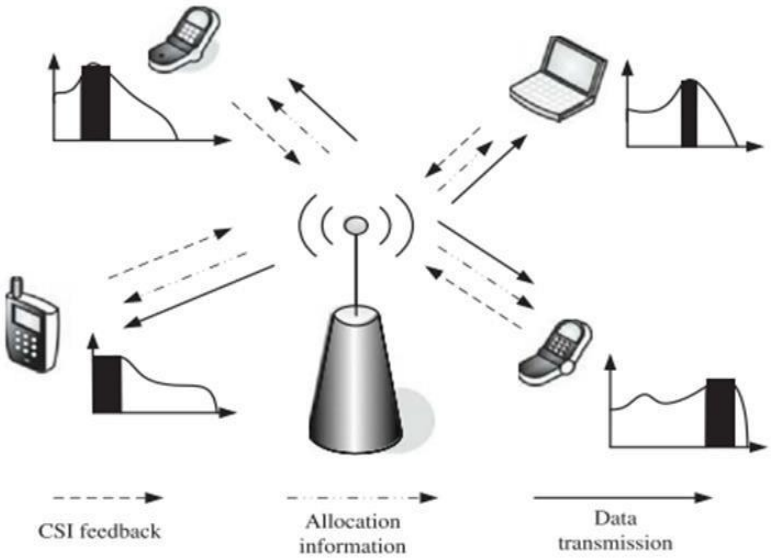

Fig. 5.7. In OFDMA, the base station allocates each user a fraction of the subcarriers, preferably, in a range where they have a strong channel.

5.2.2. OFDMA Advantages and Disadvantages

- Advantages of OFDMA start with the advantages of single user OFDM in terms of robust multipath suppression, relative low complexity, and the creation of frequency diversity.
- In addition OFDMA is a flexible multiple access techniques that can accommodate many users with widely varying applications, data rates and QoS requirements.
- Because the multiple access is performed in digital domain (before the IFFT operation) dynamic, flexible, and efficient bandwidth allocation is possible. This allows the time and frequency scheduling algorithms.
- Lower data rates such as voice and burst data are handled much more efficiently in OFDMA than in single user OFDM (i.e., OFDM-TDMA) or with CSMA.
- Take the first case voice as an example. If OFDMA has not used, each downlink user receive a very high data at signal for a very short period of time- particularly in channels with a large bandwidth such as 10 or 20 MHz,
- This requires receiver to quickly process large amount of data, would have bad latency and jitter properties as voice decompressor (vocoder) would frequently have to wait for a while before new decoded bits were available.
- The switching between the user is very Rapid more frequency overhead signalling would be required, reducing the overall system throughput
- In the uplink OFDM-TDMA would be even more toxic as in addition to these concerns the subcarrier would have to transmit avoid signal at very high total power for a very short time. This would put a large

strain on the power amplifier.

- OFDMA does not suffer from these problems because the allocation of time-frequency resources to users is extremely flexible and can be adopted dynamically to meet arbitrary throughput delay and possibly other QoS constraints.

5.3. Single Carrier Frequency Division Multiple Access (SCFDMA)

- SC-FDMA is employed in the LTE uplink.
- Conceptually, this system evolves naturally from SC-FDE modulation approach.
- SC-FDE is a single-carrier modulation technique; it is not possible for an uplink user to use only part of the spectrum. SC-FDMA can reasonably be called "FFT (or DFT) pre-coded OFDMA.
- SC-FDMA more closely resembles OFDMA because it still requires an IFFT operation at the transmitter in order to separate the users.
- The goal of SC-FDMA is
    - Take the **low peak-to-average ratio (PAR)** properties of SC-FDE.
    - Achieve an OFDMA-type system that allows partial usage of the frequency band.

5.3.2. SCFDMA-Working

SC-FDMA uplink transmitter:

- SC-FDMA uplink transmitter is shown in figure 5.8.

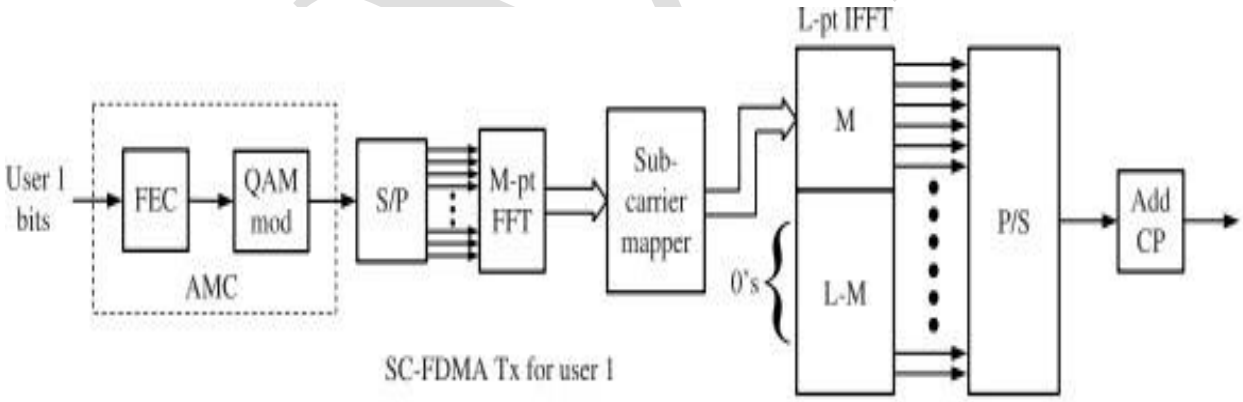

Fig. 5.8: SC-FDMA uplink transmitter for user 1, where user 1 is allocated subcarriers 1, 2,…...M of L total subcarriers

- The only difference that the user's M_k complex symbols are pre-processed with an FFT of sizeM_k and refer as time-domain complex symbols as x[n].
- In LTE, M_k is related to the number of resource blocks allocated to the user k for its uplink transmission.
- The FFT operation creates a frequency domain version of the signal X[m] = FFT(x[n],

- The **time-domain outputs of the IFFT** correspond to an **over-sampled and phase-shifted** version of the original time-domain signal x[n].
- x[n] is oversampled by a factor of L/M and experiences a phase shift that depends on which inputs to the IFFT are used.

The SC-FDMA uplink receiver:

- Figure 5.9 shows SC-FDMA uplink receiver, here we explicitly assume that each user occupies a fraction M/L of the spectrum like OFDM.
- The difference now being that for each user's M_k "subcarriers," an additional small IFFT must be applied prior to detection to bring the received data back into the time domain.
- Frequency domain equalization is applied to each user's signal independently after the FFT, and users' signals are de-mapped based on the current subcarrier allocation.

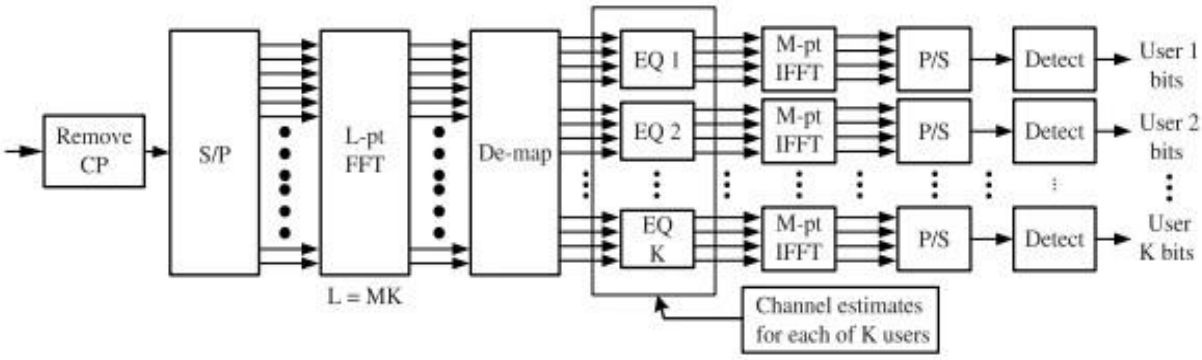

Fig.5.9. SC-FDMA uplink receiver.

5.3.2. SC-FDMA Advantages and Disadvantages

Table 5.3: SC-FDMA Advantages and Disadvantages

Advantages	Disadvantages
It is similar to OFDMA	SC-FDMA can experience **more spectral leakage** than OFDMA, and achieve **frequency diversity differently**, leading to slight difference in performance.
Only one part of **frequency spectrum** is used by any **one user at a time.**	SC-FDMA has **complexity disadvantages vs. OFDMA** in both TX and Rx as an **additional FFT of size Mk** has to be performed for each user at the TX And RX
The band used to be chosen **adaptively for higher throughput.**	
PAR of SC-FDMA is significantly lower than the OFDMA.	
Reducing **PAR reduces the cost of RF power amplifier**. Hence the SC-FDMA is suitable for uplink	
Suitable For **uplink due to simple transmitter**.	

5.4. Multiuser Diversity and Opportunistic Scheduling,

- **Multiuser diversity** is a diversity technique using user scheduling in multiuser wireless channels where user scheduling allows the base station to select high quality channel users so as to transmit information through a relatively high quality channel in time, frequency and space domains based on the channel quality information fed back from all candidate UEs (User Equipment).
- Multiuser diversity describes the gains available by selecting a user from a subset of users that have "good" conditions.
- Adaptive modulation is the means by which good" channels can be exploited to achieve the higher data rates their high SINRs make viable.

5.4.1. Multiuser Diversity

The main motivation for **adaptive subcarrier** allocation in OFDMA systems is to **exploit multiuser diversity**.

Even though OFDMA has number of subcarriers, here we focus on the allocation for a single subcarrier among multiple users.

Consider a K-user system, where the subcarrier of interest experiences **independent and identically distributed (i.i.d).**

Rayleigh fading, that is each user's channel gain is independent of the others, and is denoted by h_k. **The probability density function (PDF)** of user k's channel gain $p(h_k)$is given by

$$p(h_k) = \begin{cases} 2h_k e^{-h_k^2} & if \quad h_k \geq 0 \\ 0 & if \quad h_k < 0 \end{cases}$$

The base station only transmits to the user with highest channel gain, expressed as $h_{max} = \max\{h_1, h_1, h_2, h_3, \ldots . h_K\}$.

It is easy to verify that the PDF of $h_{\max}$is

$$p(h_{\max}) = 2Kh_{max}(1 - e^{-h_{max}^2})^{K-1} * e^{-h_{max}^2}$$

Figure 5.10 shows the PDF of $h_{\max}$for different values of K.

As the number of users' increases, the PDF of $h_{\max}$shifts to right, which means the probability of getting a large channel gain, improves.

Figure 5.11 shows how this increased channel gain improves the channel capacity and bit error rate (BER) for uncoded QPSK.

Both the graph show that the **Multiuser Diversity gain** improves as the number of users in the system increases, but the majority of the gain is achieved from just the first few users.

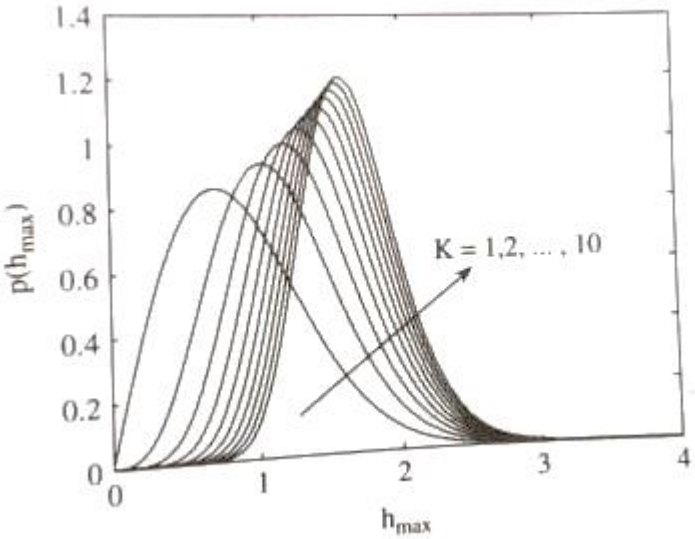

Fig. 5.10. Probability density function of h_{max}, the maximum of K users' channel gains

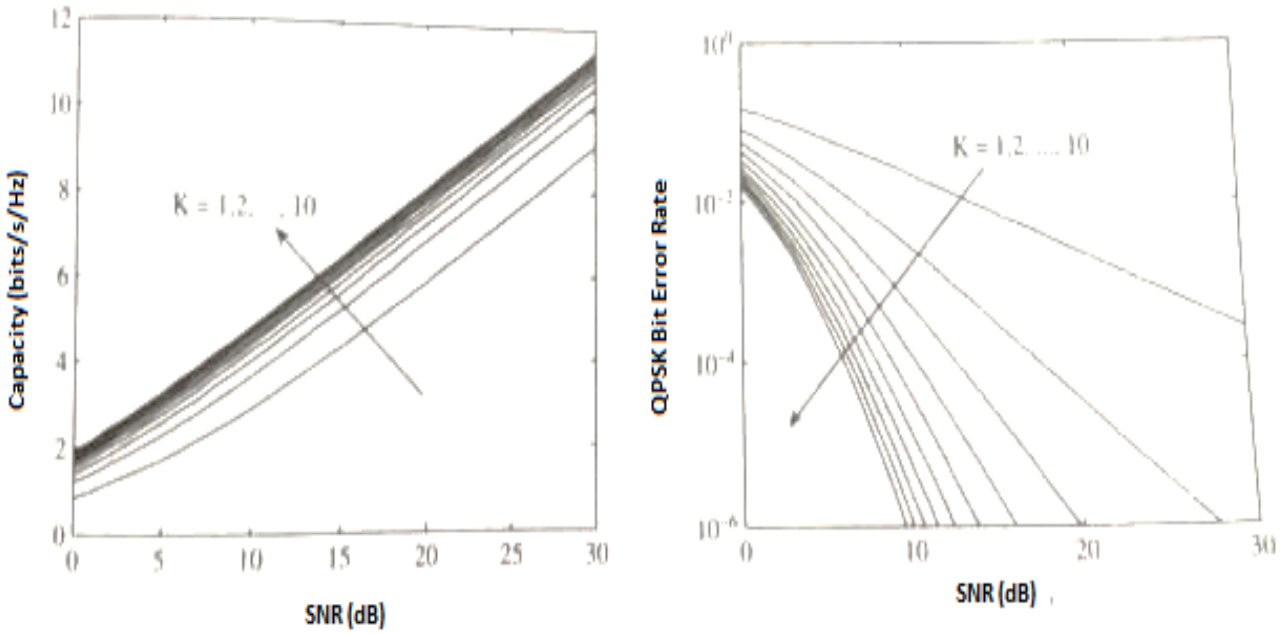

Fig. 5.11. Avearge capacity (left) and QPSK bit error rate (right) for different numbers of users K.

5.4.2. Opportunistic Scheduling Approaches for OFDMA

The idea is to **develop algorithms for determining which users to schedule**. How **to allocate subcarriers to them**, and how to determine the **appropriate power levels** for each user on each subcarrier.

The different possible approaches to resource allocation are discussed here. Obtaining high throughput with fairness among the users in the system is the class of technique used.

We generally assume that the **outgoing queues for each user are full**, but in practice the algorithms discussed here can be **modified to adjust for queue length**. The **subcarrier mapping** must **be broadcast to all users whenever the resource allocation changes**:

Typically, the resource allocation must be performed on the **order of the channel coherence time**;

The resource allocation is usually formulated as a constrained optimization problem to either

(1) Minimize the **total transmit power** with a constraint on the **user data rat**e or to

(2) **Maximize the total data rate** with a constraint **on total transmit power**.

The first objective is appropriate for **fixed-rate applications (e.g., voice),** while the second is more appropriate for **bursty applications** like data and other IP applications.

5.4.3. Maximum Sum Rate Algorithm

The objective of the maximum sum rate (MSR) algorithm is to **maximize the sum rate of all users,** given a total transmit power constraint.

The drawback of the MSR algorithm is that it is likely that a **few users that are close to the base stat**ion (and hence have excellent channels) will be allocated **all the system resources**.

The **SINR**, **data rate**, and **power** and **subcarrier allocation** that is achieved by the **MSR algorithm are discussed.**

Let $P_{k,l}$ denote user k's transmit power in subcarrier *l*. The signal-to-interference plus-noise ratio for user k in subcarrier *l*, denoted as $\mathrm{SINR}_{k,l}$ can be expressed as

$$\mathrm{SINR}_{k,l} = \frac{P_{k,l} h_{k.,l}^2}{\sum_{j=1, j\neq k}^{k} P_{j,l} h_{k,l}^2 + \sigma^2 \frac{B}{L}}$$

where σ^2 AWGN power spectrum density

L→ Total number of subcarriers

B→ Total transmission bandwidth

Using the Shannon capacity formulas the throughput measure, the MSR algorithm maximizes the following quantity:

$$max P_{k,l} \sum_{k=1}^{K} \sum_{l=1}^{L} \frac{B}{L} \log(1 + \mathrm{SINR}_{k,l})$$

with the total power constraint

$$\sum_{k=1}^{K} \sum_{l=1}^{L} P_{k,l} \leq P_{tot}$$

The sum capacity is maximized if the total throughput in each subcarrier is maximized.

Hence, the max sum capacity optimization problem can be decoupled into L simpler problems, one for each subcarrier.

Further, the sum capacity in subcarrier *l*, denoted as C_l, can be written as

$$C_l = \sum_{k=1}^{K} \log(1 + \frac{P_{k,l}}{P_{tot,l} - P_{k,l} + \frac{\sigma^2}{h_{k,l}^2}\frac{B}{L}})$$

here $P_{tot,l} - P_{k,l}$ denotes other users' interference to user k in subcarrier l.

It is easy to show that C_l is maximized when all available power $P_{tot,l}$ is assigned to just the single user with the largest channel gain in subcarrier l. This is sometimes referred to as a "greedy" optimization.

5.4.4 Maximum Fairness Algorithm

Although **the total throughput is maximized** by the MSR algorithm, in a cellular system like LTE where the **path loss attenuation** will vary by several orders of magnitude between users, some users will be **extremely underserved** by an **MSR-based scheduling procedure**.

The **maximum fairness algorithm** aims to allocate the subcarriers and power such that the **minimum user's data rate is maximized**.

This essentially corresponds to **equalizing the data rates of all users**, hence the name "**Maximum Fairness**."

The maximum fairness algorithm can be referred to as a **Max-Min problem**, since the goal is to maximize the minimum data rate.

The **optimum subcarrier and power allocation** is considerably more **difficult to determine** than in the MSR case because the **objective function is not concave**.

It is particularly difficult (NP-hard) to simultaneously find the **optimum subcarrier and power allocation**.

Therefore, low-complexity suboptimal algorithms are necessary, in which the subcarrier and power allocation are done separately.

A common approach is to assume initially that **equal power is allocated to each subcarrier**, and then to **iteratively assign each available subcarrier to a low-rate user** with the best channel on it.

Once this generally suboptimal subcarrier allocation is completed, an optimum (waterfilling) power allocation can be performed.

It is typical for this suboptimal approximation to be very close to the **performance obtained** with an exhaustive search for the **best joint subcarrier-power allocation**, both in terms of the **fairness achieved and the total throughput**.

5.4.5. Proportional Rate constraints Algorithm

A weakness of the Maximum Fairness algorithm is that the **rate distribution among users is not flexible**.

Further, the total throughput is largely limited by the user with the worst SINR, as most of the resources are allocated to that user, which is clearly suboptimal.

In a wireless broadband network, it is likely that different users require application-specific data rates that vary substantially.

A generalization of the Maximum Fairness algorithm is the Proportional Rate Constraints (PRC) algorithm, whose objective is to **maximize Sum throughput**, with the additional constraint that each user's data rate is proportional to a set of pre-determined system parameters$\{\beta_k\}_{k=1}^{K}$. Mathematically, the **proportional data rate's constraint** can be expressed as

$$\frac{R_1}{\beta_1} = \frac{R_2}{\beta_2} = \cdots \ldots \ldots .. = \frac{R_K}{\beta_K}$$

where each user's achieved data rate R_K is

$$R_K = \sum_{l=1}^{L} \frac{\rho_{k,l} B}{L} log_2(1 + \frac{P_{k,l} h_{k,l}^2}{\sigma^2 \frac{B}{L}})$$

and $\rho_{k,l}$can only be the value of either 1 or 0, indicating whet her subcarrier is used by user k or not. Clearly, this is the same setup as the Maximum Fairness algorithm if β_K=1 for each user.

The advantage is that any arbitrary data rates can be achieved by varying the β_K values.

The **PRC optimization problem** is also generally very difficult to solve directly, since it involves both continuous variables $P_{k,l}$ and binary variables $\rho_{k,l}$and the feasible set is not convex.

As for the Maximum Fairness case, the prudent approach is to separate the subcarrier and power allocation, and to settle for a near-optimal subcarrier and power allocation that can be achieved with manageable complexity.

5.4.6. Proportional Fairness Scheduling

The three algorithms we have discussed thus far attempt to **instantaneously achieve** an objective such as the **total sum throughput (MSR algorithm), maximum fairness (equal data rates among all users), or pre-set proportional rates for each user.**

Alternatively one could attempt to achieve such objectives over time, **which provides significant additional flexibility to the scheduling algorithms.**

In this case, in addition to throughput and fairness, a **third element enters the tradeoff**, which is **latency.**

In an extreme case of latency tolerance, the scheduler could simply just wait for the user to get close to the base station before transmitting.

In fact, the MSR algorithm achieves both fairness and maximum throughput if the users are assumed to have the same average channels in the long term (on the order of minutes, hours, or more), and there is no constraint with regard to latency.

Since latencies even on the order of seconds are generally unacceptable, scheduling algorithms that balance latency and throughput and achieve some degree of fairness are needed.

The most **popular framework** for this type of scheduling is **Proportional Fairness** (PF) scheduling.

The PF scheduler is designed to **take advantage of multiuser diversity**, while maintaining comparable long-term throughput for all users.

Let $R_k(t)$denote the instantaneous data rate that user k can achieve at time t, and $T_k(t)$be the average throughput for user k up to time slot t.

The **Proportional Fairness scheduler** selects the user, denoted as k*, with the highest $R_k(t)/T_k(t)$ for transmission.

In the long-term, this is equivalent to selecting the user with the highest instantaneous rate relative to its mean rate.

The average throughput $T_k(t)$for all users is then updated according to

$$T_k(t+1) = \begin{cases} \left(1 - \frac{1}{t_c}\right) T_k(t) + \frac{1}{t_c} R_k(t) & k = k^* \\ \left(1 - \frac{1}{t_c}\right) T_k(t) & k \neq k^* \end{cases}$$

Since the **Proportional Fairness scheduler** selects the user with the largest instantaneous data rate relative to its average throughput, "bad channels for each user are unlikely to be selected.

On the other hand, users that have been consistently underserved receive scheduling priority, which promotes fairness.

The parameter t_c controls e latency of the system. If $t_c$is large, then the latency increases, with the benefit of higher sum throughput. If t_c is small, the latency decreases since the average throughput values change more quickly, at the expense of some throughput.

The Proportional Fairness scheduler has been widely adopted in **packet data systems such as HSPDA** and lxEVDO, where t_c is commonly set between 10 and 20.

One interesting property of PF scheduling is that as $t_c \to \infty$, the sum of the logs of the user data rates is maximized. That is, PF scheduling maximizes $\sum_{k=1}^{K} \log T_k$ or equivalently$\prod_{k=1}^{K} T_k$.

Although the Proportional Fairness scheduler was originally designed for a **single users channel**, time-slotted system, it can be adapted to an OFDMA system.

In an OFDMA system, due to the multiple parallel subcarriers in the frequency domain, multiple users can transmit on different subcarriers simultaneously.

The **original PF algorithm** can be extended to **OFDMA by treating** each subcarrier independently.

Let $R_k(t,n)$ be the supportable data rate for user k in subcarrier in at time slot t. Then for each subcarrier the user with the largest $R_k(t,n)/T_k(t)$ is selected for transmission.

Let $\Omega_k(t)$ denote the set of subcarriers in which user k is scheduled for transmission at time slot t, then the average user throughput is updated as

$$T_k(t+1) = \left(1 - \frac{1}{t_c}\right) T_k(t) + \frac{1}{t_c} \sum_{n \in \Omega_k(t)} R_k(t,n)$$

for k = 1,2,.. . , K. Other weighted adaptations and evolutions of PF scheduling of OFDMA are certainly possible.

5.4.7. Performance Comparison

In this section, we briefly compare the performance of the various scheduling algorithms for OFDMA that we have discussed, in order to gain intuition on their relative performance and merits.

In these results, an exponentially **decaying multipath profile** with **six multipath components** was used to generate the **frequency diversity.**

All users have the same **average SNR**. The absolute capacity numbers are not especially important; what are important are the trends between the different curves.

Throughput First, we consider the multiuser diversity gains of the different types of algorithms. Figure 5.12 shows the capacity (normalized by the total bandwidth) for static TDMA (round robin), Proportional Fairness, and the maximum sum rate (MSR) algorithm.

As expected, the MSR algorithm achieves the best total throughput, and the gain increases as the number of users' increases, on the order of log log K.

Static TDMA achieves no multiuser gain, since the users transmit independent of their channel realizations.

It can be seen that the proportional fairness algorithm approaches the throughput of the MSR algorithm, with an expected penalty due to its support for under-served users.

Fairness Now, let us consider how the worst user in the system does: this is shown the left of Figure 5.13.

As expected, the Maximum Fairness algorithm achieves the best performance for the most under-served user, with a slight gain for optimal power allocation over its allocated subcarriers (waterfilling) relative to an equal power allocation.

Also as expected, the MSR algorithm results in a starved worst case user-in fact, Static TDMA performs in-between the two, with the percentage loss relative to the Maximum Fairness algorithm increasing as the number of user's increases, since TDMA does not take advantage of multiuser diversity

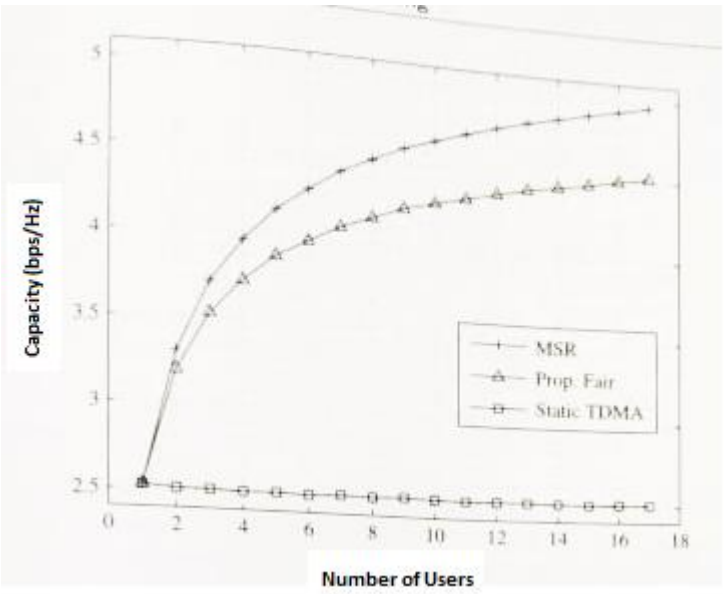

Fig. 5.12 Sum capacity vs. number of users for a single carrier system (scheduling is in time domain only).

Consider a heterogeneous environment with eight users. The first user has an average SINR of 20dB, the second user has an average SINR of 10 dB and user3-8 have average SINRs of 0dB. This is a reasonable scenario in which user 1 is close to the base station, user 3-8 are near the cell edge and user 2 is in between.

As shown in figure 5.13. MSR algorithm allocates bulk resources to user 1and user 2 and user3-8 has a through put of approximately zero. A Proportional rate constraint algorithm (PRC) is balanced algorithm used.

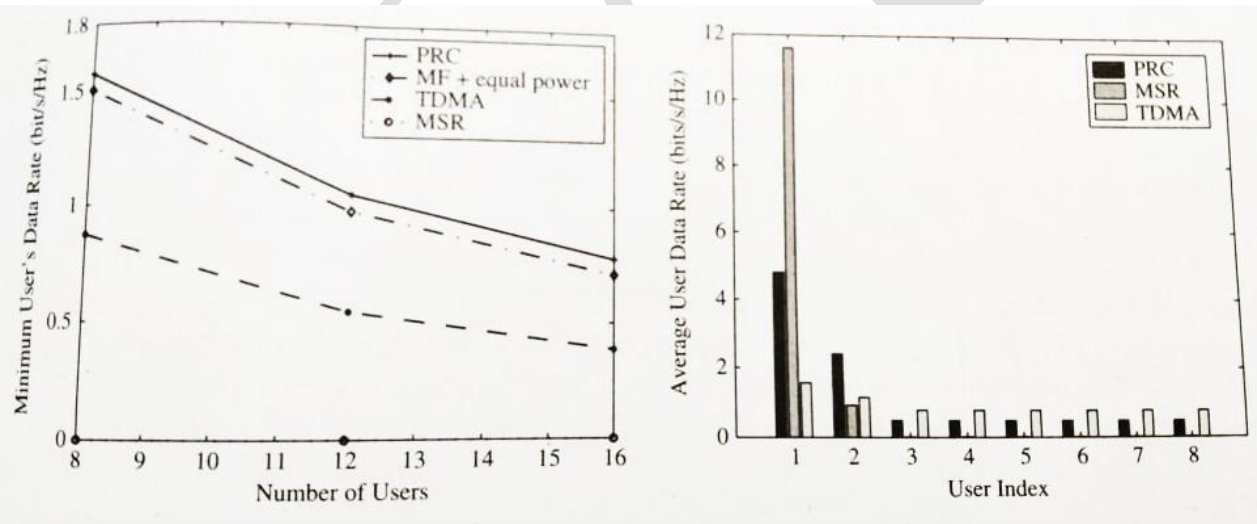

Fig. 5.13. (Left) Minimum user capacity in multiuser OFDMA vs. the number of users (right). Normalized average throughput per user in a heterogeneous environment

Summary of Comparison

- Table 5.5 compares the four resource allocation algorithms that this chapter introduced for OFDMA systems.
- In summary, the Maximum Sum Rate allocation is the best in terms of total throughput, achieves a low computational complexity, but has a terribly unfair distribution of data rates.

- Hence, the MSR algorithm is viable only when all users have nearly identical channel conditions and a relatively large degree of latency is tolerable.
- The Maximum Fairness algorithm achieves complete fairness while sacrificing significant throughput, and so is appropriate only for fixed, equal rate applications.
- The Proportional Rate Constraints (PRC) algorithm allows a flexible tradeoff between these two extremes, but it may not always be possible to aptly set the desired rate constraints in real time.

Table 5.5 Comparison of different OFDMA Adaptive Resource Allocation Schemes.

Algorithm	**Sum Capacity**	**Fitness**	**Complexity**
Maximum Sum Rate	Best	Poor and inflexible	Low
Maximum Fairness algorithm	Poor	Best but inflexible	Medium
Proportional Rate Constraints (PRC) algorithm	Good	Most flexible	High
Proportional Fairness algorithm	Good	Flexible	Low

5.5. OFDMA and SC-FDMA in LTE,

- Any OFDMA-based standard specify following things in order for the system to work.
- It must specify the **"quanta," or units,** of time-frequency resource (RB) that can be assigned.
- It must specify messaging protocols that allow the MS to request resources when necessary, and to know what resources they have been assigned, both for transmission and reception.
- Ranging procedures must be specified so that simultaneous uplink transmissions from several different mobile units can be reliably decoded at the base station.
- In LTE, mobile units are allocated groups of subcarriers over time and frequency **known as a resource block (RB).**
- The size of the resource block is chosen to **balance a tradeoff between granularity and overhead**.
- For example, if assign any subcarrier to any user in any time slot increase very large amount of overhead to specify the current allocation to all the mobile units.
- Much lower overhead would be achieved by an OFDM-TDMA type system, but not efficient in many respects including total throughput, delay, and the required peak power

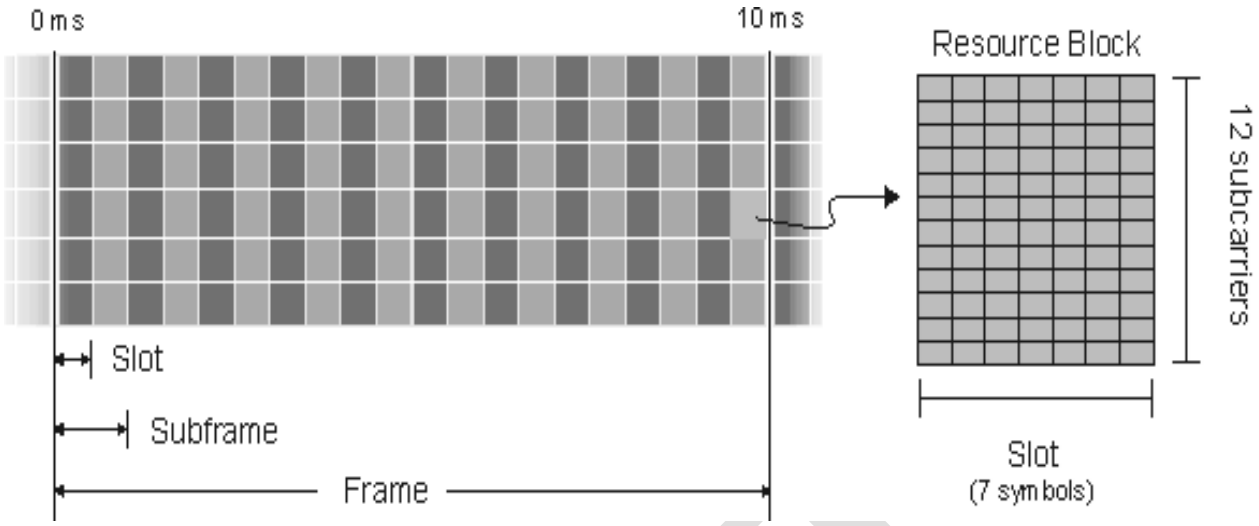

Fig.5.13a The Structure of LTE Time –Frequency Grid (LTE FDD frame of 1.4 MHz channel)

Throughput, delay, and fairness, they are not specified by LTE. Rather, LTE simply specifies how resources may be assigned, and how to notify the mobile units of the assignment. Figure 5.13a shows the structure of LTE Time – Frequency Grid (LTE FDD frame of 1.4 MHz channel)

5.5.1. The LTE Time Frequency Grid

In LTE, mobile units are allocated groups of subcarriers over time and frequency known as a resource block.

The size of the resource block is chosen to balance a tradeoff between granularity and overhead.

On the one hand, it would be nice to be able to assign any subcarrier to any user in any time slot; but then it would take a very large amount of overhead to specify the current allocation to all the mobile units.

On the other hand, the much lower overhead would be achieved by an OFDM-TDMA type system where one user has access to all the subcarriers and uses the same AMC level on all of them-but as discussed this is not efficient in many respects including total throughput, delay, and the required peak power.

The downlink resource block of LTE is shown in figure 5.10: a typical resource block consists of 12 subcarriers over 7 OFDM symbols, also referred to as a timeslot.

A timeslot in LTE spans 0.5 msec and two consecutive timeslots create a subframe.

Resources are allocated to users in units of resource blocks over a subframe, that is, 12 subcarriers over 2 x 7 = 14 OFDM symbols for a total of 168 "resource elements," which used for data since some are used for various layer 1 and layer 2 control messages.

The subcarriers of a resource block can be allocated in one of two ways.

The first way, known as **distributed subcarrier allocation**, takes advantage of frequency diversity by spreading the resource block hop across the entire channel bandwidth. This can be accomplished by using a "comb" pattern at any given point of time for a given user, so that its subcarriers occur at even intervals across

the entire frequency bandwidth. This approach is typically used in the downlink (OFDMA) when distributed subcarrier allocation is used.

Alternatively, frequency diversity can be achieved by hopping a contiguous block of subcarriers in time, for example, the 12 subcarriers in a resource block could hop to a different part of the spectrum over each of the 14 OFDM symbols utilized.

Since the channel is generally relatively constant over 14 OFDM symbols, frequency diversity is achieved as long as sufficient interleaving is employed: this is certainly the case 1n LTE systems, which are heavy on interleaving.

This approach is used in the uplink, Since SC-FDMA transmitters in general operate on contiguous sets of subcarriers as seen in figure 5.8.

The **second way to allocate subcarriers** is **adjacent subcarrier allocation**. This approach relies on a channel-aware allocation of resources, so that each user can be allocated a resource block where they have a strong channel. Since a block of 12 subcarriers is typically smaller than the coherence bandwidth of the channel, frequency diversity is not achieved, which is helpful as long as the scheduler is able to assign "good" blocks to each user.

5.5.2. Allocation Notification and Uplink Feedback

In order for each MS to know which subcarriers to use in downlink reception and transmission, the BS must broadcast this information to the pool of active users in its cell.

Similar to previous UMTS standards such as wideband CDMA, overhead signalling is done on a logical control channel, in this case, the PDCCH (physical downlink control channel).

The PDCCH specifies the following:

- Downlink resource block allocation
- Uplink resource blocks allocation.
- QAM constellation to use per resource block
- Type and rate of coding to use per resource block

Once a user is able to decode the PDCCH, it knows precisely where to receive (downlink or to transmit (uplink), and how. The PDCCH is sent over the first 2-3 OFDM symbols of each subframe across all the subcarriers.

Each allocation, which consists of a resource block subframe, consisted of 168 subcarriers over 14 OFDM symbols. Since the first 2-3 symbols in each subframe are used by the PDCCH, about 14-21% of the total downlink capacity is used by the PDCCH.

Additional downlink capacity is also used by other control channels and the pilot symbols.

To aid the base station in uplink scheduling, LTE units utilize **buffer status reporting** (BSR), wherein each user can notify the BS about its queue length, and **channel quality information** (CQI) feedback.

Once the BS is well informed about the channels to/from the users and their respective queue lengths, it can more appropriately determine users. In the downlink, the **BS** has inherent knowledge **of the amount of buffered** data for each user, while in the uplink it can estimate the channel from each user.
Hence, **BSR** feedback is only used for uplink scheduling while **CQI feedback** is only used for downlink scheduling and AMC-mode selection. The CQI reporting can be either periodic or aperiodic, wideband or subband, and multiple **CQI feedback modes** are defined for different scenarios.

5.5.3. Power Control

Although **OFDMA (and SC-FDMA)** systems are designed to have **orthogonality within a cell** (unlike many CDMA systems, for example), they still suffer from two forms of self-interference.
The first is **intercell interference**, whereby neighbouring cells allocate the same time frequency resource blocks and hence cause interference. This intercell interference can occur in either the uplink or the downlink, but is typically the most problematic for cell edge in the downlink since they are approximately equidistant between two base stations and hence doubly suffer from lower desired power and higher interference power. **Interference-aware allocation** approaches that can mitigate this problem and **power control** is one part of the solution.

The second form of **self-interference** is related to **imperfect time-frequency-power synchronization** between the different uplink users,
This is not a problem in the **downlink** since each **mobile station** receives a single waveform from the base station.
On the other hand, in the uplink, the received waveform is aggregated **"in the air"** as the summation of the different transmits waveforms for each user.
Because these **distributed transmitters** are bound to be at least slightly unsynchronized in time and frequency, the orthogonality of the subcarriers will be degraded at the receiver, for OFDM.

Furthermore, if power control is not used, the different signals may be received with very different powers, which causes a dynamic range problem when the signal is A/D converted-that is, the strong users will dominate the A/D dynamic range and the weak users will experience severe quantization noise, making digital reconstruction of those signals difficult or impossible.
In short, some uplink power control is needed in OFDMA (or SC-FDMA) systems.

In LTE, **closed-loop power control** is possible in the uplink where the BS can explicitly indicate the maximum transmit power density (power per resource block) that can be used by each user.

This information is carried on the PDCCH when the uplink allocation for each user is specified.

The uplink loop power control algorithm in LTE is flexible in terms of the amount of channel inversion it performs.

On one extreme, channel inversion can be used, which results in the same received power for all users regardless of their channel conditions.

This maximizes fairness. On the other hand, no power control can be used-all users transmit at full power- but low battery efficiency and poor fairness, as cell edge users are disadvantaged.

These two extremes can be balanced by fractional power control, whereby the channel is partially inverted, that is, the transmit power is proportional to h^{-s} where s is a fractional value between 0 and 1. Note that fixed transmit power corresponds to s =0 and full channel inversion to s = 1.

Fractional power control is the **open-loop power control scheme** in LTE. In the downlink, no closed-loop power control is specified in the standard

5.6. OFDMA system Design Considerations.

The first concerns the allocation of resources n à cellular network, where the actions of one base station affect its neighbours.

The second is a point is diversity gain from opportunistic scheduling in a system like LTE and channel using coding, adaptive modulation, OFDM, and multiple antenna techniques.

5.6.1. Resource Allocation in Cellular System

The scheduling algorithms discussed thus far in this module are all very dependent on the perceived SINR tor each user.

For example, if a certain MS near the cell edge (presumably with a low SINR) is selected to transmit in the uplink at high power, this will lower the effective SINRs of all the users in the cell next to it, hence perhaps changing the ideal subcarrier allocation and burst profile for that cell. Therefore, a cellular OFDMA system greatly benefits from methods for suppressing avoiding the interference from adjacent cells.

A simple approach is to use a unique **frequency hopping pattern** for each base station to randomize to the other cell interference, an approach popularized by the Flarion (now part of Qualcomm) scheme called **FLASH-OFDM**. Although this scheme reduces the probability of a worst-case interference scenario, under a high-system load the interference levels can still rapidly approach untenable levels and the probability of collision can grow large.

A more sophisticated approach is to develop advanced receivers that are capable of cancelling the interference from a few dominant interference sources. This is a challenging proposition even in a single-carrier system, and its viability in a cellular OFDMA system is open to debate.

An appealing approach is to revisit the resource allocation algorithms discussed in Section 5.4.2 in the context of a multi-cell system. If each base station is unaware of the exact conditions in the other cells, and no cooperation among neighbouring base stations is allowed, the subcarrier and power allocation follows the theory of non-cooperative games and typically results in a Nash equilibrium, where no user can benefit by unilaterally deviating from their current allocation.

Simply put, this scenario is the equivalent of gridlock: for example, the users reach a point where neither increasing nor decreasing their power improves their capacity.

The convergence time of such approaches is generally not fast enough to be of much use in an LTE system anyway.

Better performance can be obtained if there is some cooperation between the base stations. For example, there could be a master scheduler for all the base stations that knew the channels in each and every base station and made multi-cell resource allocation schedules accordingly.

This would be **prohibitively complex,** though, due to (1) transferring large amounts of real-time information to and from this centralized scheduler, and (2) the **computational difficulties** involved in processing this quantity of information to determine a globally optimal or near-optimal resource allocation.

5.6.2. Fractional Frequency Reuse in Cellular System

Compared to CDMA based cellular **Systems OFDMA-based cellular systems** are more vulnerable to **inter-cell interference**, which especially degrades the performance of users at the cell edge.

Frequency planning techniques have been proposed for LTE systems to mitigate inter-cell interference instead of standard universal frequency reuse.

Fractional frequency reuse (FFR) is one such strategy that partitions a cell into several regions and applies different frequency reuse factors in each region.

The inter-cell interference can be significantly reduced since FFR increases the spatial distance between neighbouring interferers.

Figure 5.14 shows examples of the two main types of FFR deployments:

Strict FFR and **Soft Frequency Reuse (SFR)**. In a Strict FFR system, users in the interior of the cells universally share a common sub-band of frequencies, while the cell edge users' bandwidth is partitioned based on a reuse factor of N, requiring a total of N+1 sub-bands.

It is termed "strict" because interior users do not share any spectrum with edge users, which reduces interference for both interior users and edge cell users.

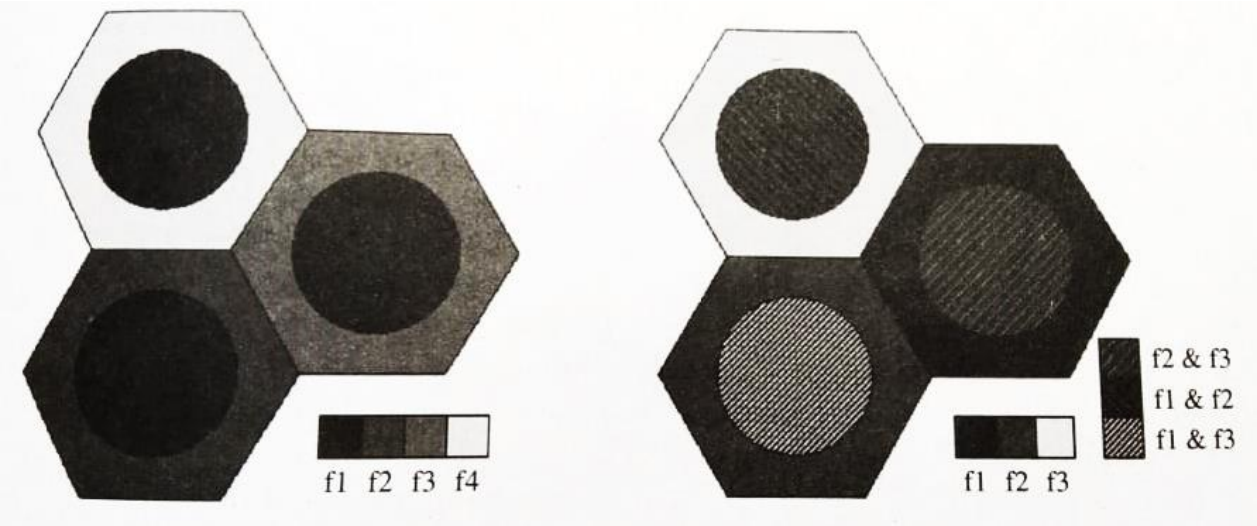

Fig.5.14. Strict fractional frequency Reuse (left) and Soft Frequency Reuse (right) geometry with N=3 cell edge reuse factors.

Soft Frequency Reuse employs a similar partitioning strategy as Strict FFR, with the exception that interior users can share the same bandwidth as edge users in adjacent cells.

As a result, cell interior users typically transmit at lower power levels than the cell-edge users in order to reduce interference to neighbouring cells.

While SFR is more bandwidth efficient than strict FFR, it allows more interference to both cell interior and edge users.

Since the cell partitions are based on the geometry of the network, the locations of the users are important in order to determine the frequency partitions.

However, one practical method to determine user classifications is for each cell to use the average received SINR of its users, which is usually a good indicator of the distance of the user from its base station.

The base station then classifies users with average SINR less than a pre-determined threshold as edge users, while users with average SINR greater than the threshold are classified as interior users.

Figure 5.15 shows the results of a simulation comparing the two main FFR schemes with standard N = 1 frequency reuse.

A total of 48 resource blocks (RBs) are available, users are uniformly distributed over the 12-cell network, and a high traffic load is assumed.

The cell coverage radius is 1 km and the interior radius, which determines the number of interior and edge users served, is varied from 0.25 to 0.95 km.

The plot on the left of figure 5.15 shows the significant benefit the Strict FFR scheme provides for edge users over SFR and universal frequency reuse.

However, the plot on the right shows that if the network has a moderate or high traffic load, this benefit comes at a cost of not being able to fairly serve all users.

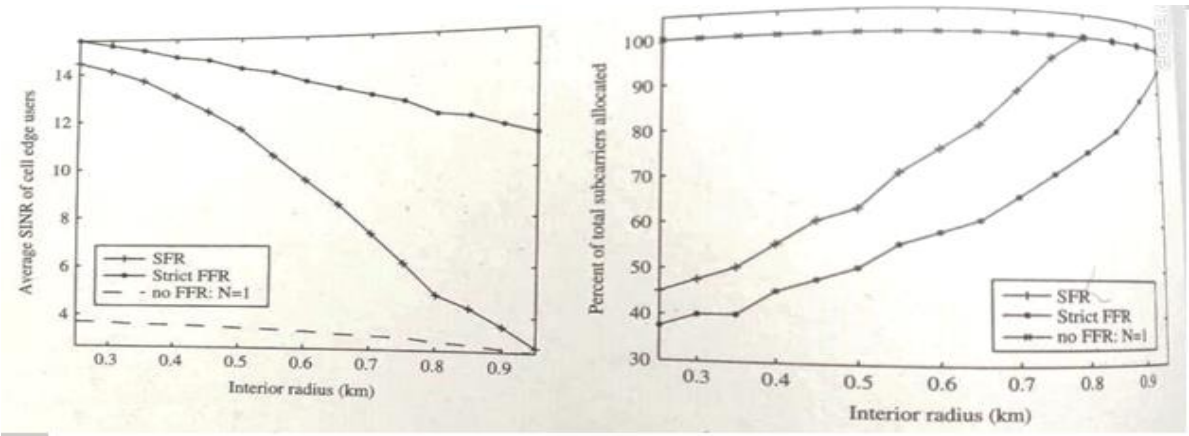

Fig. 5.15 Edge user performance (left); Spectral efficiency of the reuse schemes

5.6.3 Multiuser Diversity vs. Frequency and spatial Diversity

Diversity is a key source of performance gain in OFDMA systems.

In particular, **OFDMA exploits multiuser diversity** among the different MSs, frequency diversity across the subcarriers, and time diversity by allowing latency.

Spatial diversity is also a key aspect of LTE systems. One important observation is that these sources of diversity will generally compete with each other.

For example, **imagine that the receiver has two sufficiently spaced antennas**.

If two-branch selection diversity is used for each subcarrier, then the amount of variation between each subcarrier will decrease significantly, since most of the deep fades will be eliminated by the selection process.

Now, if ten different users were to execute an **OFDMA scheduling algorithm**, although the overall performance would increase further, the multiuser diversity gain would be less than that without the selection diversity, since each user has already eliminated their worst channels with the **selection combining**.

The intuition of this simple example can be extended to other diversity-exploiting techniques, like coding and interleaving space-time and space-frequency codes, and so on.

In short, **the total diversity gain** will be less than the sum of the diversity gains from the individual techniques.

Figure 5.16 shows the combined effect off **multiuser and spatial diversity** for five different configurations of

2 x 1 MIMO systems: single antenna (SISO), opportunistic beam- forming, Alamouti STBCs (**Space Time Block Coding**), and **transmit beamforming** with limited feedback **(1-bit CSI)** and **perfect CSI.**

For a single user, the **SISO and opportunistic BF** is the lease effective, since opportunistic BF requires multiuser diversity to get a performance gain over SISO.

Alamouti codes increase performance, in particular reducing the probability; of a very low SINR from occurring.

The **CSI-endowed techniques do the best**; notably the perfect CSI case is always 3 dB better than Alamouti codes regardless of the number of users.

When the system does have 50 users, however, some of the conclusions change considerably.

Now, **Alamouti codes actually perform worse than single-antenna transmission**. This is because Alamouti codes harden the received SINR toward the average and so the SINR difference between the users is attenuated but this is exactly what is exploited by a **multiuser scheduler that picks** the best out of the 50 users.

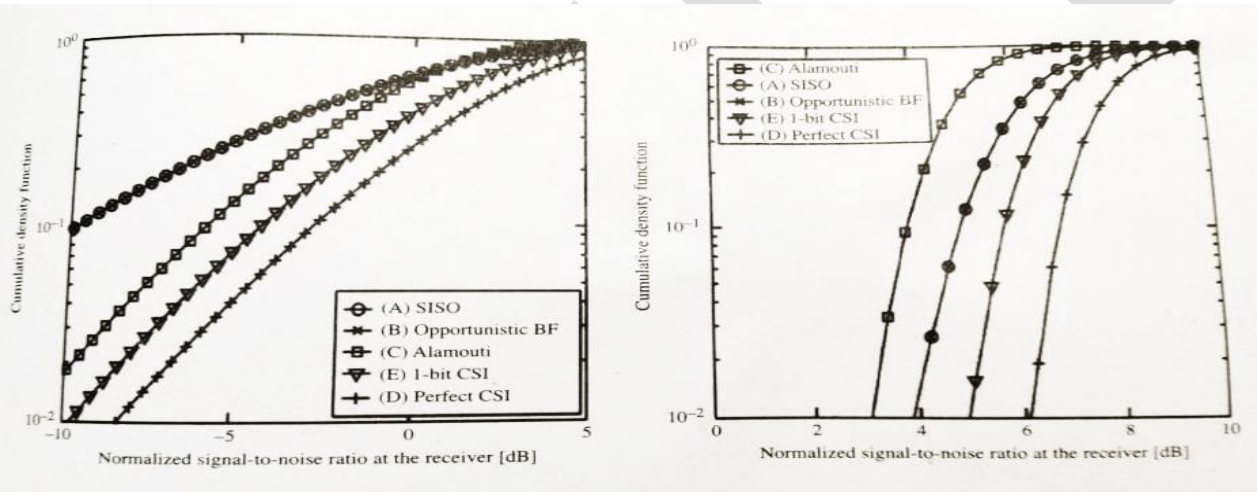

Fig. 5.16 The SINR of multiuser diversity combined with antenna diversity techniques.
The numbers of users K=1 (left), K=50 (right).

The LTE Standard: Overview and Channel Structure of LTE

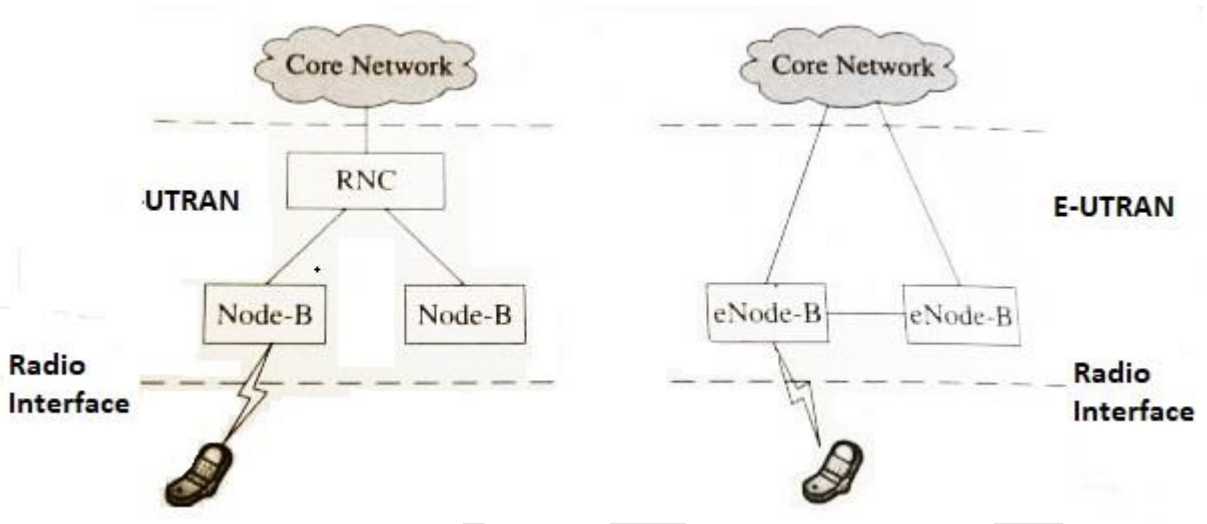

Fig. 5.17. Radio Interface architecture of UTRAN and E-UTRAN

The LTE project in 3GPP focusses on enhancing the UMTS Terrestrial Radio Access (UTRA).

Another parallel project in 3GPP is the evolved packet core (EPC), which focuses on the core network evolution with flatter all IP, packet based architecture.

A Radio Interface of a wireless network is the interface between the mobile terminal and the base station.

UTRAN consists of two logical entities.

The Node-B (radio base station).and the RNC (radio network controller).

Radio Interface architecture of UTRAN and E-UTRAN are shown in figure 5.17. Compared to the traditional Node-B, the e-Node B supports features such as radio resource control, admission control, and mobility management; these were present in RNC (Radio Network Controller).

E-UTRAN provides higher throughput and low latency over the radio interface.

5.7. Introduction to LTE

- LTE is the next step in the evolution of mobile cellular systems and was standardized as part of the 3GPP Release & specifications.
- Unlike 2G and 3G cellular systems that were designed mainly with voice services in mind, LTE was designed primarily for high-speed data services, which is why LTE is a packet-switched network from end to end and has no support for circuit-switched services.
- However, the low latency of LTE and its sophisticated quality of service (QoS) architecture allow a network to emulate a circuit-switched connection on top of the packet-switched framework of LTE.

5.7.1. Design Principles

The basic design principles that were agreed upon and followed in 3GPP while designing the LTE specifications include:

Network Architecture:

- Unlike 3G networks, LTE was designed to support packet- switched traffic with support for various QoS classes of services.
- Previous generations of networks such as UMTS/HSPA and **IxRTT (Single carrier Radio Transmission Technology/EvDO-Evolution Data Optimized)** also support **packet-switched traffic** but this was achieved by subsequent add-ons to the initial version of the standards.
- For example, **HSPA**, which is **a packet-switched protocol** (packet-switched over the air), was built on top of the **Release 99 UMTS network** and as a result carried some of the unnecessary burdens of a circuit-switched network.
- LTE supports **packet switching for high data rate** services from thestart.
- The LTE radio access network**, E-UTRAN**, was designed to have the minimum. number of interfaces (i.e., the minimum. number of network elements) while still being able to provide efficient packet-switched transport for traffic belonging to all the QoS classes such as c**onversational**, **streaming**, **real-time**, **non-real-time**, and **background classes**.

Data Rate and Latency:

- The design target for **downlink and uplink peak data rates** for LTE are **100 Mbps und 50 Mbps**, respectively, when operating at the **20MHz frequency division duplex (FDD) channel** size.
- The user-plane latency is defined in terms of the time it takes to transmit a small IP packet from the UE to the edge node of the radio access network (also called as base station) or vice versa measured on the IP layer.
- The target for **one-way latency in the user plane is 5 ms** in an unloaded network, that is, if only a single UE is present inthe cell.
- For the **control-plane latency**, the transition time from a camped state to an active state is less than 100 ms, while the transition time between a dormant state and an active state should be less than 50 ms.

Performance Requirements:

- The target performance requirements for LTE are specified in terms of spectrum efficiency, mobility, and coverage, and they are in general expressed relative to the 3GPPRelease 6 HSPA.
- **Spectrum Efficiency**

- The average downlink user data rate und spectrum Efficiency target is three to four times that of the baseline HSDPA (**High Speed Downlink Packet Access)** network. Similarly, in uplink the average user data rate and spectrum efficiency.
- Similarly, in the **uplink the average** user data rate and spectrum efficiency target is two to three times that of the baseline HSUPA **(High Speed Uplink Packet Access)** network.
- The cell edge throughput, measured as the 5th percentile throughput, should be two to three times that of the baseline HSDPA and HSUPA

Mobility

- The **mobility requirement** for LTE is to be able to support hand off/ mobility at different terminal speeds.
- Maximum performance is expected for the lower terminal speeds of 0 to 15 km/hr, with minor degradation in performance at higher mobilespeeds up to 120 km/hr.
- LTE is also expected to be able to sustain a connection for terminal speeds up to 350 km/hr but with significant degradation in the system performance.

Coverage

- For the cell coverage, the above performance targets should be met up to 5 km.
- For cell ranges upto 30km, a slight **degradation of the throughput** is tolerated and a more significant degradation for **spectrum efficiency is acceptable**, but the mobility requirements should be met.
- **Cell ranges up to 100 km** should not be **precluded by the specifications**.

MBMS Services:

- LTE should also provide enhanced support for **Multimedia Broadcast and Multicast Services** (MBMS) compared to UTRA operation.

Radio Resource Management:

The radio resource management requirements cover various spots such as enhanced support for

- end-to-end QoS,
- efficient support for transmission of higher layers,
- and support for load sharing/balancing and
- Policy management enforcement across different radio access technologies.

Deployment Scenario and Co-existence with 3G

- LTE supports two deployment scenarios:

- **Standalone deployment scenario**, where the operation deploys LTE either with no previous network deployed in the area or with no requirement for interworking with the existing UTRAN/GERAN (GSM

EDGE radio access network).

- **Integrating with existing UTRAN/GERAN deployment scenario,** where the operator already has either a UTRAN and/or GERAN network deployed with full or partial coverage in the same geographical area.

Flexibility of Spectrum and Deployment:

In order to become a truly global standard, LTE was designed to be operable under a wide variety of spectrum scenarios, including its abilityto coexist and share spectrum with existing 3G technologies.

Service providers in different geographical regions often have different spectrums in terms of the **carrier frequency and totalavailable bandwidth**, which is why LTE was designed to have a **scalable bandwidth from 1.4MHz to 20MHz**.

In order to accommodate **flexible duplexing** options, LTE was designed to operate in both **frequency division duplex (FDD) and time division duplex (TDD) modes.**

Interoperability with 3G and 2G Networks:

Multimode LTE terminals, which support UTRAN and/or GERAN (GSM EDGE Radio Access Network) (

Enhanced Data rates for GSM Evolution (EDGE) GSM-Global System for Mobile Communication) operation should be able to support measurement of, and handover from and to, both **3GPP UTRAN und 3GPP GERAN** systems with acceptable terminal complexity and network performance.

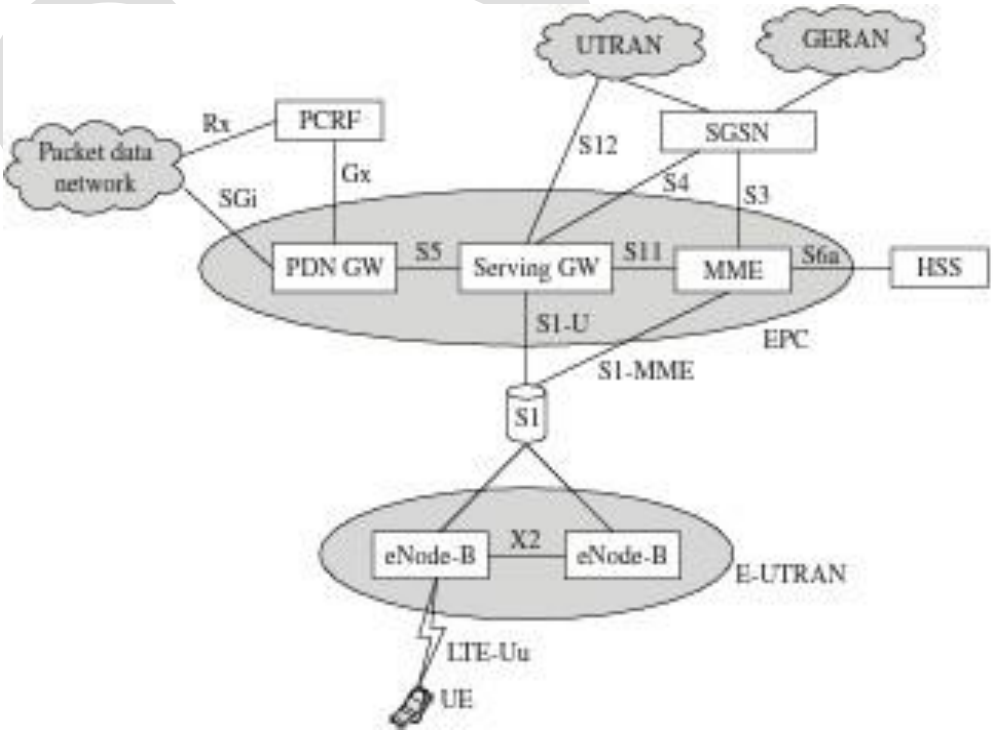

Fig.5.18: LTE end to end network architecture

5.7.2. Network Architecture

Figure 5.18 shows the end-to-end network architecture of LTE and the various components of the network.

The entire network is composed of the **radio access network (E-UTRAN)** and the **core network (EPC),** both of which have been defined as new components of the end-to-end network in Release 8 of the 3GPP specifications.

In this sense, LTE is different from UMTS since UMTS defined a new radio access network but used the same core network as the previous-generation Enhanced GPRS (EDGE) network. The main components of the E-UTRANand EPC are

- **UE:** The mobile terminal. (User Equipment).
- **eNode-B:** The eNode-B (also called the base station) terminates the air interface protocol and is the first point of contact for the UE.

As in figure 5.17.The eNode-B is the only logical node in the E-UTRAN, so it includes some functions previously defined in the RNC of the UTRAN, such as radio bearer management, uplink and downlink dynamic radio resource management and data packet scheduling, and mobility management.

- **Mobility Management Entity** (MME): MME is similar in function to the control plane of legacy Serving GPRS Support Node (SGSN). It manages mobility aspects in 3GPP access such as gateway selection and tracking area list management.
- **Serving Gateway (Serving GW):** The Serving GW **terminates the interface towards** E-UTRAN, and routes data packets between E-UTRAN and EPC.
- It is the local mobility anchor point for inter eNode-B handovers and also provides an anchor for inter-3GPP mobility. The other responsibilities include **lawful intercept, charging and dome policy enforcement. The Serving GW and the MME may be implemented in one physical node or separate physical nodes**.
- **Packet Data Network Gateway (PDN GW**): The PDN GW terminates the SGi interface toward the Packet Data Network (PDN). It routes data pickets between the EPC and the external PDN, and is the key node for ***policy enforcement and charging data collection***. It also provides the anchor point for mobility with non-3GPP accesses. The external PDN can be any kind of IP network as well as the IP Multimedia Subsystem (IMS) domain. The PDN GW and the Serving GW may be implemented in one physical node or separated physical nodes.
- **S1 Interface**: The S1 interface is the interface that separates the E-UTRAN and the EPC. It is split into two

parts:

- the S1-U, which carries traffic data between the eNode-B and theServing GW, and the
- S1-MIME, which is a signaling-only interface between the eNode-B and the MME.
- **X2 Interface**: The X2 interface is the interface between eNode-Bs, consisting of two parts:
- The X2-C is the control plane interface between eNode-Bs,
- While the X2-U is the user plane interface between eNode-Bs.
- It is assumed that there always exists an X2 interface between Node-Bs that needs to communicate with each other, for example, for support of handover.

5.7.3. Radio Interface Protocols

LTE radio interface is designed based on a layered protocol stack, which can be divided into **control plane** and **user plane protocol stacks** and is shown in figure 5.19. The packet flowin the user plane is shown in figure 5.20. The LTE **radio interface protocol** is composed of the following layers

Radio Resource Control (RRC): The RRC layer performs the control plane functions including paging, maintenance and release of an RRC connection- security handling-mobility management, and QoS management.

Packet Data Convergence Protocol (PDCP):

The main functions of the **PDCP sub layer include IP packet header compression and decompression** based on the Robust Header Compression (ROHC) protocol, **ciphering of data** and **signaling and integrity protection** for signaling. There is only one PDCP entity at the eNode-B and the UE per bearer.

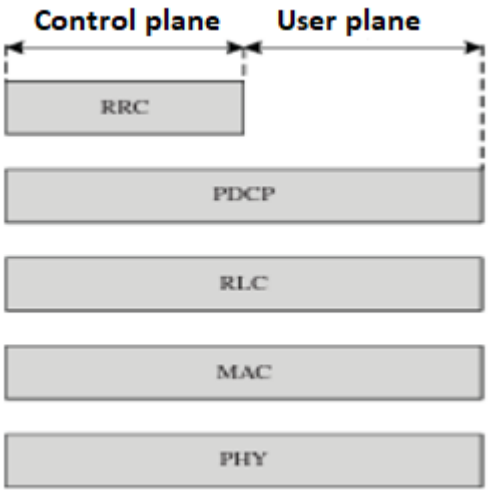

Fig. 5.19: The LTE radio interface protocol stack

Radio Link Control (RLC): The main functions of the RLC sublayer are segmentation and concatenation of

data units, error correction through the Automatic Repeat reQuest (ARQ) protocol, and in-sequence delivery of packets to the higher layers. It operates in three modes:

– **The Transparent Mode (TM):** The TM mode is the simplest one, without RIC header addition, data segmentation, or concatenation, and it is used for specific purposes such as random Access.
– **The Unacknowledged Mode (UM):** The UM mode allows the detection of packet loss and provides packet reordering and reassembly, but does not require retransmission of the missing protocol data units (PDUs)
– **The Acknowledged Mode (AM):** The AM mode is the most complex one, and it is configured to request retransmission of the missing PDUs in addition to the features supported by the UM mode.
There is only one RLC entity at the eNode-B and the UE per bearer.

Medium Access Control (MAC): The main functions of the MAC sublayer include **error correction through the Hybrid-ARQ (H-ARQ) mechanism**, **mapping between logical channels and transport channels, multiplexing/'demultiplexing of RLC** PDUs on to transport blocks, priority handling between logical channels of one UE, and priority handling between UEs by means of dynamic scheduling.

Physical Layer (PHY): The main function of PHY is the actual transmission and reception of data in the forms of transport blocks. The PHY is also responsible for various control mechanisms such as **signalling of H-ARQ feedback**, **signalling of scheduled allocations**, and **channel measurements**.

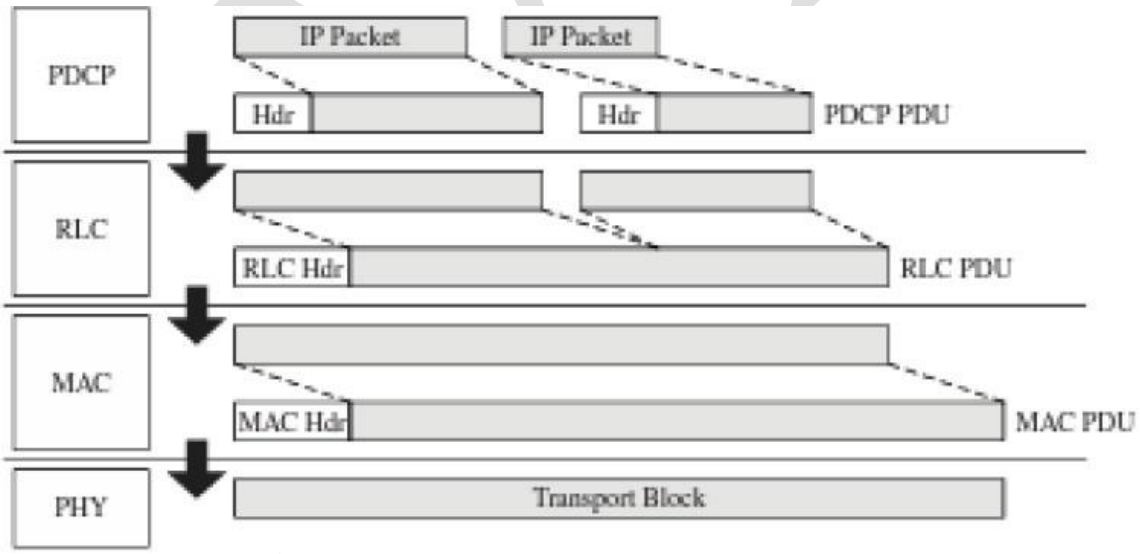

Fig. 5.20: The packet flow in the user plane

5.8. Hierarchical Channel Structure of LTE,

To efficiently support various QoS classes of services, LTE adopts a hierarchical channel structure. There are three different **channel types** defined in LTE

-- Logical channels: What to transmit

--Transport channels: How to Transmit

--Physical channels: Actual Transmission

Each layer is associated with a service access point (SAP) between different layers.

These channels are used by the **lower layers of the protocol stack** to provide services to the higher layers. The radio interface protocol architecture and the SAPs between different layers are shown in figure 5.21.

Logical channels provide services at the **SAP between MAC and RLC layers**, while transport channels provide services at the **SAP between MAC and PHY layers**.

Physical channels are the **actual implementation of transport channels** over the radio interface.

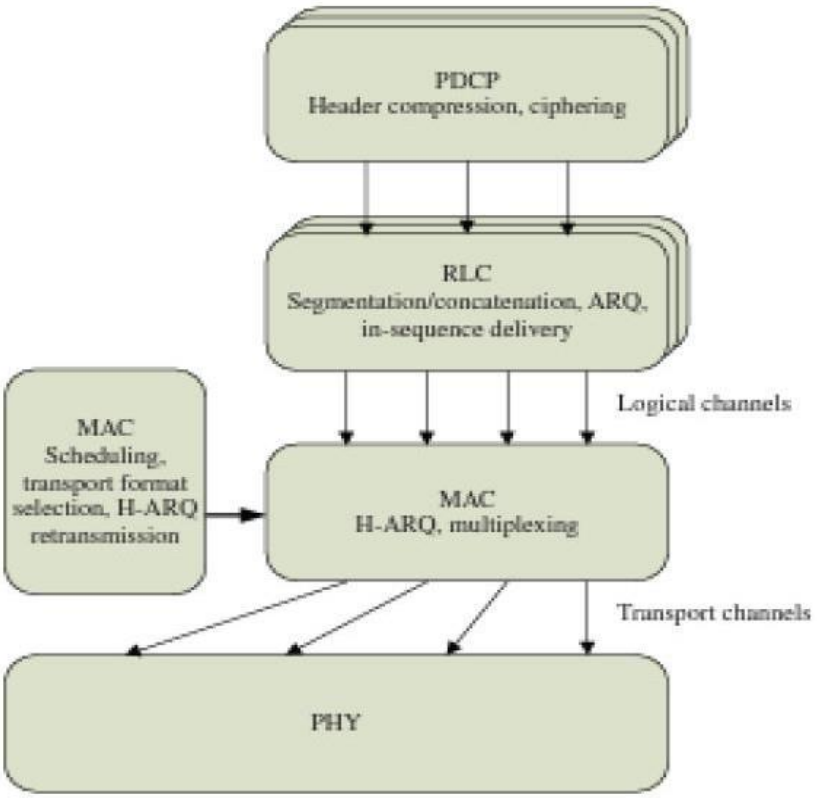

Fig. 5.21: The radio interface protocol architecture and the SAPs b/w different layers

5.8.1. Logical Channels: What to Transmit

Logical channels are used by the MAC to provide services to the RLC. Each logical channel is defined based on the type of information it carries. In LTE, there are two categories of logical channels depending on the service they provide: **logical control channels and logical traffic channels.**

- **Broadcast Control Channel (BCCH):** A downlink common channel used to broadcast system

control information to the mobile terminals in the cell, including downlink system bandwidth, antenna configuration, and reference signal power. Due to the large amount of information carried on the BCCH, it is mapped to two different transport channels: the Broadcast Channel (BCH) and the Downlink Shared Channel (DL-SCH).

- **Multicast Control Channel (MCCH):** A point-to-multipoint downlink channel used for transmitting control information to UEs in the cell. It is only used by UEs that receive multicast/'broadcast services.

- **Paging Control Channel (PCCH):** A downlink channel that transfers paging information to registered UEs in the cell, for example, in case of a mobile-terminated communication session.

- **Common Control Channel (CCCH):** A bi-directional channel for transmitting control information between the network and UEs when no RRC connection is available, implying the UE is not attached to the network such is in the idle state. Most commonly the CCCH is used during the random access procedure.

- **Dedicated Control Channel (DCCH):** A point-to-point, bi-directional channel that transmitted dedicated control information between a UE and the network. This channel is used when the RRC connection is available, that is, the UE is attached to the network.

The logical traffic channels, which are to transfer user plane information, include:

- **Dedicated Traffic Channel (DTCH):** A point-to-point, bi-directional channel used between a given UE and the network. It can exist in both uplink and downlink.

- **Multicast Traffic Channel (MTCH):** A unidirectional point-to-multipoint data channel that transmits traffic data from the network to UEs. It is associated with multicast/broadcast service.

5.8.2 Transport Channels: How to Transmit

The transport channels are used by the PHY to offer services to the MAC.

A transport channel is basically characterized by how and with what characteristics data is transferred over the radio interface, that is, the **channel coding scheme**, the **modulation scheme**, and **antenna mapping**.

LTE defines two MAC entities: on in the UE and one in the E-UTRAN, which handle the following downlink/uplink transport channel.

Downlink Transport Channels

- **Downlink Shared Channel (DL-SCH):** Used for transmitting the downlink data, including both control

and traffic data, and thus it is associated with both logical control and logical traffic channels. It supports H-ARQ, dynamic link adaption, dynamic and semi-persistent resource allocation, UE discontinuous reception, and multicast/broadcast transmission.

- **Broadcast Channel (BCH):** A downlink channel scouted with the BCCH logical channel and is used to broadest system information over the entire coverage area of the cell. It has a fixed transport format defined by the specifications.

Multicast Channel (MCH): Associated with MCCH and MTCH logical channels for the multicast/broadcast service. It supports **Multicast/Broadcast Single Frequency Network** (**MBSFN**) transmission, which transmits the same information on the same radio resource from multiple synchronized base stations to multiple UEs.

- **Paging Channel (PCH):** Associated with the PCCH logical channel. It is mapped to dynamically allocate physical resources, and is required for broadcast over the entire cell coverage area. It is transmitted on the Physical Downlink Shared Channel (PDSCH), and supports UE discontinuous reception.

Uplink Transport Channels

- **Uplink Shared Channel (UL-SCH):** The uplink counterpart of the DL-SCH. It can be associated to CCCH, DCCH, and DTCH logical channels. It supports H-ARQ, dynamic link adaption, and dynamic and semi-persistent resource allocation.

- **Random Access Channel (RACH):** A specific transport channel that is not mapped to any logical channel. It transmits relatively small amounts of data for initial loss or, in thecase of RRC, state changes.
- **Downlink Control Information (**DCI): It carries information related to downlink/uplink scheduling assignment, modulation and coding scheme, and **Transmit Power Control (TPC) command**, and is sent over the Physical Downlink Control Channel (PDCCH). The DCI supports 10 different formats, listed in Table 5.6. Among them, **Format 0 is for signalling uplink transmission allocation**, Format 3 and 3A for TPC andthe remaining formats ire for signalling downlinks transmission allocation.

Control Format Indicator (CFI): It indicates how many symbols the DCI spans in that sub frame. It takes values CFI = 1, 2, or 3, and is sent over the **Physical Control Format Indicator Channel (PCFICH).**

- **H-ARQ Indicator** (HI): It carries H-ARQ acknowledgment in response to up link transmissions, and is sent over the Physical Hybrid ARQ Indicator Chanel (PHICH). HI = 1 for a positive acknowledgement (ACK) and HI = 0 for a negative acknowledgment (NAK).

Table 5.6 DCI Formats

SL. NO	Format	Carried Information

1	Format 0	Uplink scheduling assignment
2	Format 1	Downlink scheduling for one codeword
3	Format 1A	Compact downlink scheduling for one codeword and random access procedure
4	Format 1B	Compact downlink scheduling for one codeword with precoding information
5	Format 1C	Very compact downlink scheduling for one codeword
6	Format 1D	Compact downlink scheduling for one codeword with precoding and power offset information
7	Format 2	Downlink scheduling for UEs configured in closed-loop spatial multiplexing mode
8	Format 2A	Downlink scheduling for UEs configured in open-loop spatial multiplexing mode
9	Format 3	TPC commands for PUCCH and PUSCH with 2-bit power adjustment
10	Format 3A	TPC commands for PUCCH and PUSCH with 1-bit power adjust

5.8.3. Physical Channels: Actual Transmission:

▶ These channels are also used in both direction downlink and uplink directions.

▶ Each physical channel corresponds to a set of resources elements in the time frequency grid that carry information from higher layers.

▶ The basic entities of physical channel are resources elements and resources blocks.

▶ A resource element is a single subcarrier over one OFDM symbol and typically carry one symbol.

▶ A resource block is a collection of resource elements and in the frequency domain this represents smallest quanta of resources that can be allocated.

Downlink Physical Channel

Physical Downlink Control Channel (PDCCH): It carries information about the transport format and resource allocation related to the DL-SCH and PCH transport channels, and the H-ARQ information related to the DL-SCH. It also informs the UE about the transport format, resource allocation, and H-ARQ information related to UL-SCH. It is mapped from the DCI transport channel.

Physical Downlink Shared Channel (PDSCH): This channel carries user data and higher-layer signalling. It is associated to DL-SCH and PCH.

Physical Broadcast Channel (PBCH): It-corresponds to the BCH transport channel and carries system information.

Physical Multicast Channel (PMCH): It carriers multicast/broadcast information for the MBMS service. **Physical Hybrid-ARQ Indicator Channel (PHICH):** This channel carries H-ARQ ACK/NAKs associated with uplink data transmissions. It is mapped from the HI transport channel.

Physical Control Format Indicator Channel (PCFICH): It informs the UE about the number of OFDM symbols used for the PDCCH. It is mapped from the CFI transport channel.

Uplink Physical Channels

Physical Uplink Control Channel (PUCCH): It carries uplink control information including Channel Quality Indicators (CQI), ACK/NAKs for H-ARQ in response to downlink transmission, and uplink scheduling requests.

Physical Uplink Shared Channel (PUSCH): It carries user data and higher layer signalling. It corresponds to the UL-SCH transport channel.

Physical Random Access Channel (PRACH): This channel carries the random access preamble sent by UEs.

The physical signals defined in the LTE specifications are

Reference signal: It is defined in both downlink and uplink for channel for estimation that enable coherent demodulation. Three different receive signal in downlink are

Cell-specific reference signals, associated with non-MBSFN (**Multicast/Broadcast Single Frequency Network**) transmission.

MBSFN reference signals, associated with MBSFN transmission

UE-specific reference signals: There are two types of uplink reference signals:

Demodulation reference signal, associated with transmission of PUSCH or PUCCH

Sounding reference signal, to support uplink channel-dependent scheduling

Synchronization signal: It is split into a primary and a secondary synchronization signal, and is only defined in the downlink to enable acquisition of symbol timing and the precise frequency of the downlink signal.

5.8.4. Channel Mapping

From the description of different channel types, we see that there exists a good correlation based on the purpose

and the content between channels in different layers.

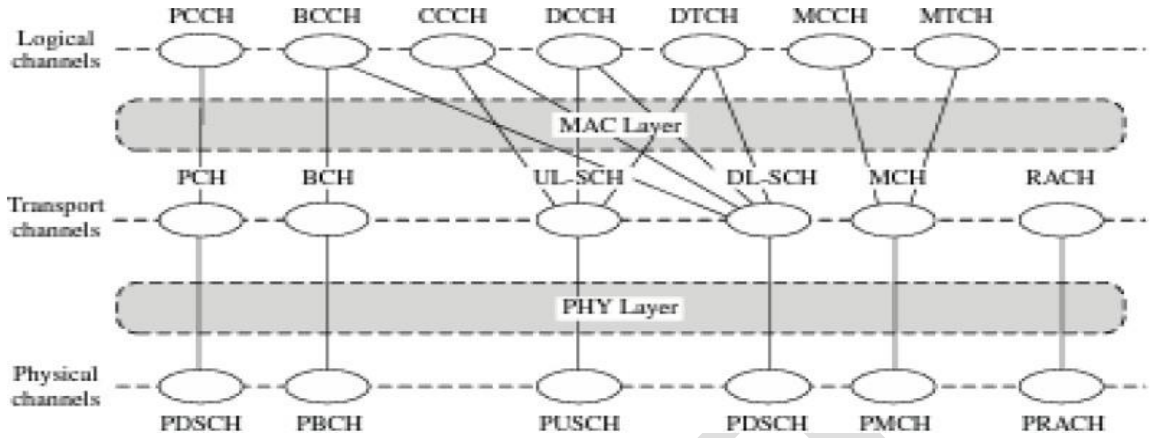

Fig. 5.23: Mapping between different channel types

This requires a mapping between the logical channels and transport channels at the MAC SAP (Service Access Points) and a mapping between transport channels and physical channels at the PHY SAP.

Such channel mapping is not arbitrary, and the allowed mapping between different channel types is shown in Figure 5.23, while the mapping between control information and physical channels is shown in Figure 5.24.

It is possible for multiple channels mapped to a single channel, for example, different logical control channels and logical traffic channels are mapped to the DL-SCH transport channel

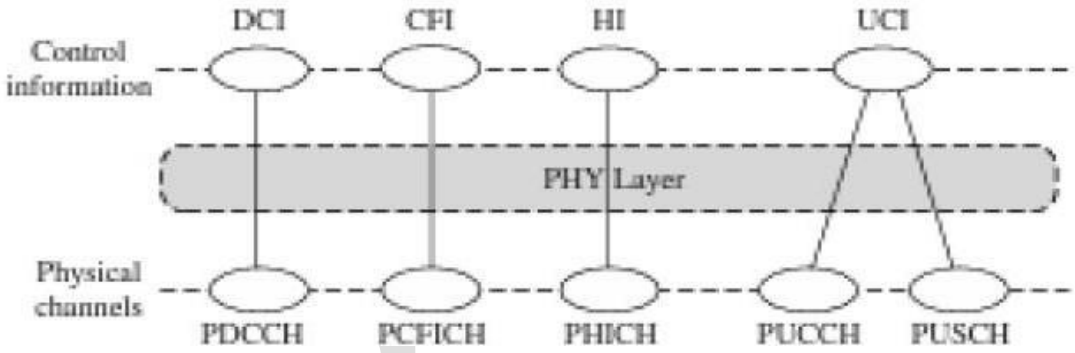

Fig. 5.24: Mapping of control information to physical channels

5.9. Downlink OFDMA Radio Resources,

In LTE, the **downlink and uplink use different transmission schemes** due to different considerations.

Here, we describe downlink and uplink radio transmission schemes, respectively. In the downlink, a scalable **OFDM transmission/multi-access technique** is used that allows for high spectrum efficiency by utilizing multiuser diversity in a frequency selective channel.

On the other hand, **SC- FDMA transmission**, multi-access technique is used in the uplink since this reduces the peak-to-average power ratio (PAPR) of the transmitted signal.

The transceiver structure of OFDM with FFT/IFFT enables scalable bandwidth operation with a low complexity, which is one of the major objectives of LTE.

As each subcarrier becomes a **flat fading channel**, compared to single-carrier transmission OFDM makes it much easier to support multi-antenna transmission, which isa key technique to enhance the spectrum efficiency.

- OFDM enables multicast/broadest services on a synchronized single frequency network, that is, MBSFN, as it treats signals from different base stations is propagating through a multipath channel and can efficiently combine them.

The multiple access in the downlink is based on OFDMA. **In each TTI (Transmission Time Interval),** a scheduling decision is made where each scheduled UE is signed a certain amount of radio resourcesin the time and frequency domain. The **radio resources allocated** to different **UEs** are **orthogonal to each other**, which mean there is **no intra-cell interference**.

Further, we describe the **frame structure** and the **radio resource block structure** in the downlink, as well as the basic principles of **resource allocation**and the **supported MIMO modes**.

5.9.1. Frame Structure

Before going into details about the resource block structure for the downlink, we first describe the frame structure in the time domain, which is a common element shared by both downlink and uplink.

In LTE specifications, the size of elements in the time domain is expressed as a number of time units T = 1/(15000 x 2048) seconds. As the normal subcarrier spacing is definedto be Δf = 15kHz, T, can be regarded as the sampling time of an FFT-based OFDM transmitter/receiver implementation with FFT size N = 2048. Note that this is just for notation purpose, as different FFT sizes are supported depending on the transmission bandwidth. LTE supports both TDD and FDD.

Frame Structure Type 1

Frame stricture type 1 is applicable to both **full duplex and half duplex FDD**. There are three different kinds of units specified for this frame structure, illustrated in figure 5.25. The smallest one is called a slot, which is of length. T_{slot} = 1536* T_s = 0.5ms. Twoconsecutive slots are defined as a sub frame of length 1ms, and 20 slots, numbered from 0 to 19, constitute a radio frame of 10ms.

Channel-dependent scheduling and link adaptation operate of a sub frame level. Therefore, the subframe duration corresponds to the minimum downlink TTI, which is of 1 ms duration, compared to a 2 ms TTI for the HSPA and a minimum 10 ms TTI for the UMTS. A shorter TTI is for fast link adaptation and is able to reduce delay and better exploit the time-varying channel through channel-dependent scheduling.

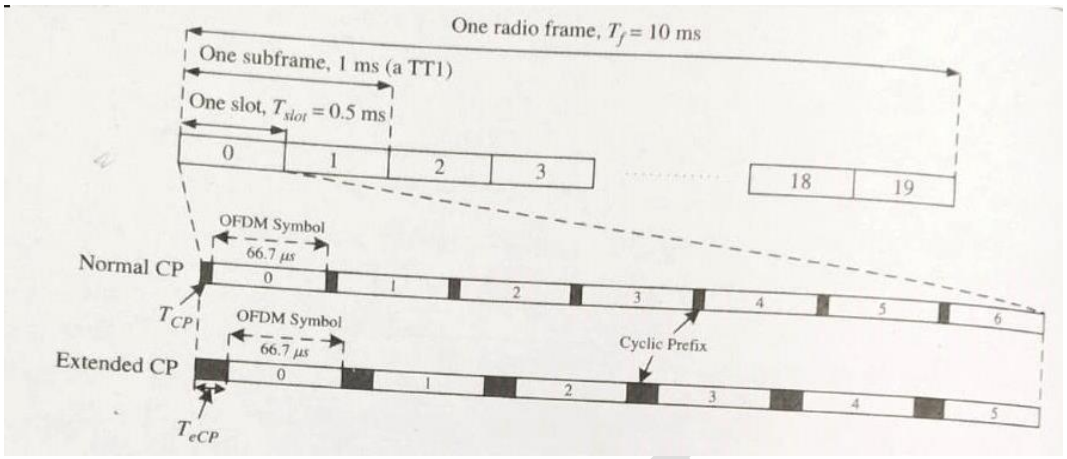

Figure 5.25: Frame structure type 1. For the normal CP, T_{CP}=160. $T_s \approx 5.2\mu s$ for the first OFDM symbols. and T_{CP}=144. $T_s \approx 4.7\mu s$ for the remaining OFDM symbols, which together fill the entire slot of 0.5ms. For extended CP, T_{eCP}=512. $T_s \approx 16.7\mu s$

Frame Structure Type 2:

Frame structure type 2 is applicable to the TDD mode. It is designed for coexistence with legacy systems such as the 3GPP TD-SCDMA-based standard. As shown in figure 5.26 each radio frame of frame structure type 2 is of length T_f; = 30720 *T_s = 10 ms, which consists of two half-frames of length 5ms each.

Each half frame is divided into five subframes with 1ms duration.

There are special subframes consists of three fields

- **Downlink Pilot TimeSlot(DwPTS)**
- **Guard Period (GP)**
- **Uplink Pilot TiemSlot(UpPTS)**

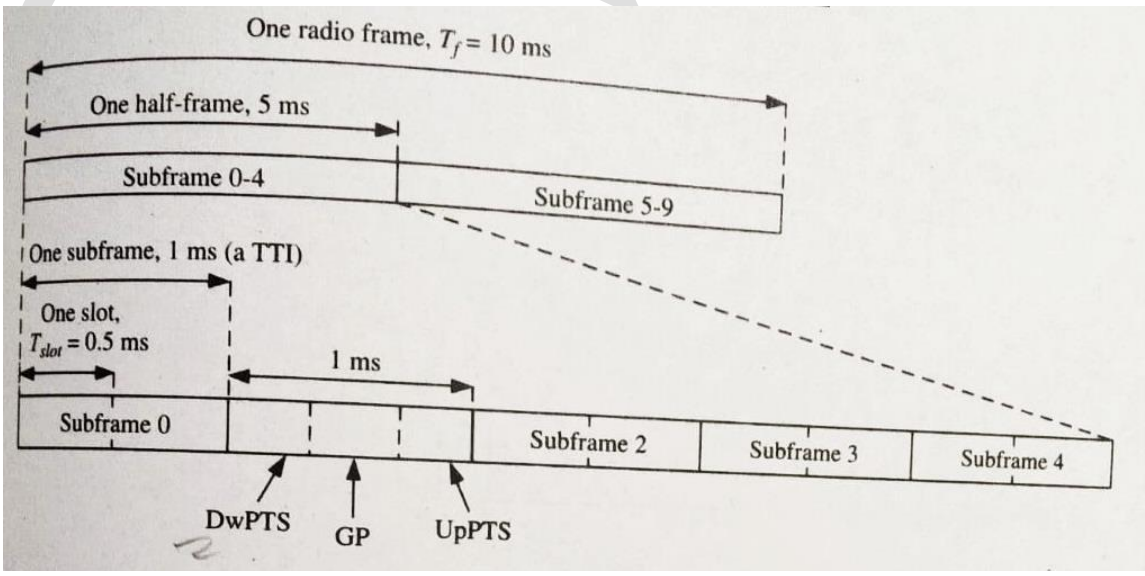

Figure 5.26: Frame structure type 2

The DwPTS field: This is the downlink part of the special subframe, and can be regarded is as on ordinary but shorter downlink sub frame for downlink data transmission. Its length can be varied from three up to twelve OFDM symbols.

The UpPTS field: This is the uplink part of the special subframe, and has a short duration with one or two OFDM symbols. It can be used for transmission of uplink sounding reference signals and random access preambles.

The GP field: The remaining symbols in the special sub frame that have not been allocated to DwPTS or UpPTS are allocated to the GP field, which is used to provide the guard period for the downlink-to-uplink and the uplink-to-downlink switch.

5.9.3 Physical Resource Blocks for OFDMA

The physical resource in the downlink in each slot is described by a time-frequencygrid, called a resource *grid*, is illustrated in Figure5.27. Such a time-frequency plane representation is a common practice for OFDM systems, which makes it intuitive for radio resource allocation. Each column and each row of the resource grid correspond to one OFDM symbol and one OFDM subcarrier, respectively. The duration of the resource grid in the time domain corresponds to one slot in a radio frame. The smallest time frequency unit in a resource grid is denoted as a resource element. Each resource grid consists of a number of resource blocks, which describe the mapping of certain physical channels to resource elements. The detail of these resource units is described as follows.

Resource Grid

The structure of each resource grid is characterized by the following three parameters

The number of downlink resource blocks(N_{RB}^{DL}): It depends on the transmission bandwidth and shall fulfill $N_{RB}^{min,DL} \leq N_{RB}^{DL} \leq N_{RB}^{max,DL}$, Where $N_{RB}^{min,DL} = 6$, and $N_{RB}^{max,DL}$=110 are for the smallest and largest downlink channels bandwidth, respectively. the values of N_{RB}^{DL} for several current specified bandwidth are listed.

The number of subcarriers in each block (N_{SC}^{RB}): It depends on the subcarrier spacing Δf=180kHz, that is each resource block is of 180kHz wide in the frequency domain.

The values of (N_{SC}^{RB}) for different subcarrier spacing's are shown in table.

The total number of $(N_{RB}^{DL}) * (N_{SC}^{RB})$ subcarriers in each resource gird.

The number OFDM symbol in each block (N_{symb}^{DL}): It depends on both the CP length and the subcarrier spacing, as specified in table 5.4.

Therefore, each downlink resource grid has $(N_{RB}^{DL})X\ (N_{SC}^{RB}X(N_{symb}^{DL})$resouces elements.

- Cell-specific reference signals support a configuration of 1, 2, or 4 antenna ports
- MBSFN reference signals are transmitted on antenna port p=4.

- UE-specific reference signals are transmitted on antenna port p=5.

Resource Element

Each resource element in the resource grid is uniquely identified by the index pair (k, *l*) in a slot. where k = 0. 1.... $(\boldsymbol{N_{RB}^{DL}})\ \boldsymbol{N_{SC}^{RB}} - \mathbf{1}$ and l = = 0,1,... , $\boldsymbol{N_{symb}^{DL}} - \mathbf{1}$ are indices in the frequency and time domains, respectively. The size of each resource element depends on the subcarrier spacing Δf and the CP length.

Resource Block

The **resource block** is the basic element for **radio resource allocation**. The minimum size of radio resource that can be allocated is the minimum TTI in the time domain, that is, one subframe of 1ms, corresponding to two resource blocks. The size of each resource block is the same for all bandwidths, which is 180 kHz in the frequency domain. There are **two kinds of resource blocks** defined for LTE: **physical and virtual resource blocks**, which are defined for different resource allocation schemes and are specified in the following section.

SVIT

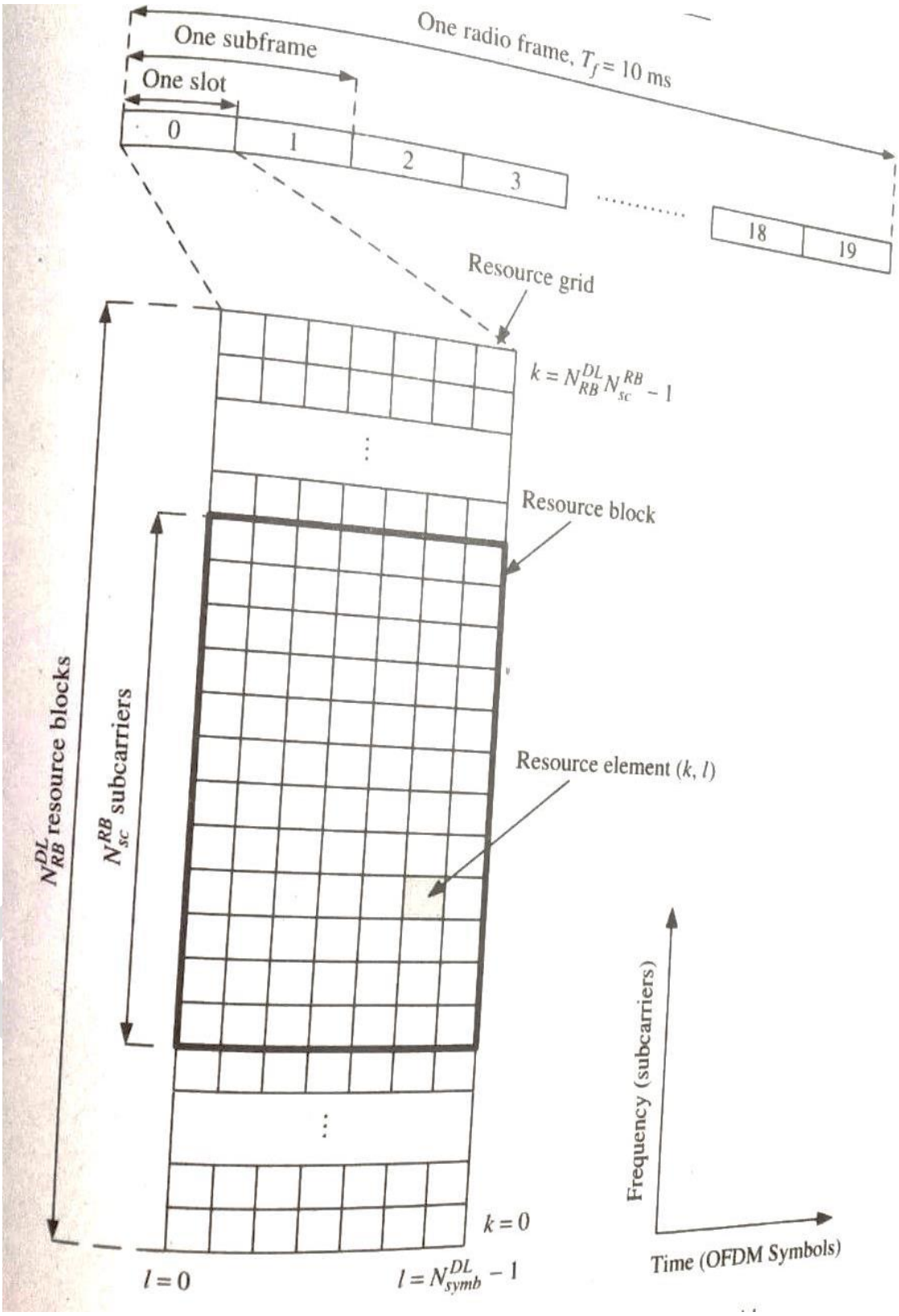

Fig. 5.27: The structure of the downlink resource grid

5.9.3 Resource Allocation

Resource allocation's role is to dynamically assign available time-frequency resource blocks to different UEs in an efficient way to provide good system performance. In LTE channel-dependent scheduling is

supported, and transmission is based on the shared channel structure where the radio resource is shared among different UEs.

With OFDMA, the downlink resource allocation is characterized by the fact that each scheduled UE occupies a number of resource blocks while each resource block is assigned exclusively to one UE at any time. **Physical resource blocks (PRBs) and virtual resource blocks (VRBs) are** defined to support different kinds of resource allocation types.

The VRB is introduced to support both **block-wise transmission (localized) and transmission on non-consecutive subcarriers (distributed)** as a means to **maximize frequency diversity**. The LTE downlink supports three resource allocation types: type 0, 1, and 2. The downlink scheduling is performed at the eNode-B based on the channel quality information fed back from UEs, and then the downlink resource assignment information is sent to UEs on the PDCCH channel.

A PRB is defined as $\boldsymbol{N_{symb}^{DL}}$ consecutive OFDM symbols in the time domain and $\boldsymbol{N_{SC}^{RB}}$ Consecutive subcarriers in the frequency domain, as shown in figure 5.27. Therefore, each PRB corresponds to one slot in the time domain (0.5 ms) and 180 kHz in the frequency domain. PRBs are numbered from 0 to ($\boldsymbol{N_{RB}^{DL} - 1}$) in the frequency domain. The PRB number n_{PRB} of a resource element (k, l) in a slot is given by

$$n_{\mathrm{PRB}} = \frac{k}{N_{SC}^{RB}}$$

The PRB is to support resource allocations of type 0 and type 1, which are defined for the DCI format 1, 2, and 2A.

In type 0 resource allocations, several consecutive PRBs constitute a resource block group (RBG), and the resource allocation is done in units of RBGs. Therefore, a bitmap indicating the RBG is sufficient to carry the resource assignment. The allocated RBGs to a certain UE do not need to be adjacent to each other, which provide frequency diversity. The RBG size P, that is, the number of PRBs in each RBG, depends on the bandwidth and is specified in Table 5.6. An example of type 0 resource allocation is shown in Figure 5.28, where P = 4 and RBGs 0, 3, 4,.. are allocated to a particular UE.

In type 1 resource allocations, all the RBGs are grouped into a number of RBG subsets, and certain PRBs inside a selected RBG subset are allocated to the UE.

There are a total of P RBG subsets, where P is the RBG size. An RBG subset p, where 0≤ p < P, consists of every P-th RBG starting from RBG p.

Therefore the **resource assignment information consists of three fields**:

The first field indicates the selected RBG subset,

The second field indicates whether an **offset is applied** and

The third field contains the **bitmap indicating PRBs inside the selected RBG subset**.

Table5.7 : Resource Allocation RBG Size vs. Downlink System Bandwidth

Downlink Resource Blocks $\left(N_{RB}^{DL}\right)$	RBG Size (P)
≤ 10	1
$11 - 26$	2
$27 - 63$	3
$64 - 110$	4

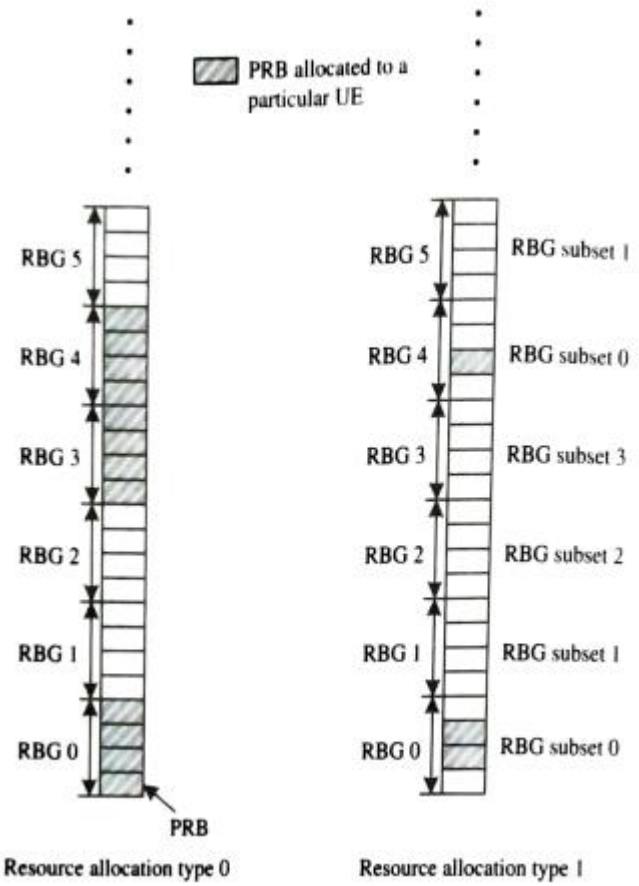

Fig. 5.28 Examples of resource allocation type 0 and type 1, where the RBG size P=4

This type of resource allocation is more flexible and is able to provide higher frequency diversity, but it also requires a larger overhead.

An example of type resource allocation is shown in Figure 5.28, where P = 4 and the RBG subset 0 selected for the given UE.

In type 2 resource allocations that are defined for the DCI format 1A, 1B, 1C and 1D, PRBs are not directly allocated. Instead, VRBs are allocated, which are then mapped onto PRBs. A VRB is of the same size as a PRB. There are two types VRBs ; VRBs of the localized type and VRBs of the distributed type.

5.9.4 Supported MIMO Modes.

Multi antenna transmission and reception (MIIMO) is a physical layer technique that can improve both the reliability and throughput of the communication over wireless channels.

It is considered a key component of the LTE physical layer from the start.

The baseline antenna configuration in LTE is two transmit antennas at the cell site and two receive antennas at the UE.

The higher-order downlink MIMO is also supported with up to four transmit and four receive antennas.

The downlink transmission supports both single-user MIMO (SU-MIMO) and multiuser MIMO (MU-MIMO). For SU-MIMO, one or multiple data streams are transmitted to a single UE through space-time processing: for MU-MIMO, modulation data streams are transmitted to different UEs using the same time-frequency resource.

The supported ST-MIMO modes are listed as follows:

- Transmit diversity with space frequency block codes (SFBC)
- Open-loop spatial multiplexing supporting four data streams
- Closed-loop spatial multiplexing, with closed-loop precoding as a special case when channel rank = 1.
- Conventional direction of arrival (DOA)-based beamforming

The supported MIMO mode is restricted by the UE capability. The PDSCH physical channel supports all the MIMO modes, while other physical channels support transmit diversity except PMCH, which only supports single-antenna-port transmission,

5.10. Uplink SC-FDMA Radio Resources.

For the LTE uplink transmission, SC-FDMA with a CP is adopted. SC-FDMA possesses most of the merits of OFDM while enjoying a lower PAPR. A lower PAPR is highly desirable in the uplink as less expensive power amplifiers are needed at UEs and the coverage is improved.

In LTE, the SC-FDMA signal is generated by the DFT-spread-OFDM. Compared to conventional OFDM, the SC-FDMA receiver has higher complexity, which however, is not considered to be an issue in the uplink given the powerful computational capability at the base station.

An SC-FDMA transceiver has a similar structure as OFDM, so the parameterization of radio resource in the uplink enjoys similarities to that in the downlink. Nevertheless, the uplink transmission has its own properties. Different from the downlink, only localized resource allocation on consecutive subcarriers is allowed in the uplink.

In addition, only limited MIMO modes are supported in the uplink.

5.10.1. Frame Structure

The uplink frame structure is similar to that for the downlink. The difference is that now we talk about SC-FDMA symbols and SC-FDMA subcarriers. In frame structure type 1, an uplink radio frame consists of 20 slots of 0.5 ms each, and one subframe consists of two slots, as in Figure 5.25. Frame structure type 2 consists of ten subframes, with one or two special subframes including DwPTS, GP, and UpPTS fields, as shown in Figure 5.26. A CP is inserted prior to each SC-FDMA symbol. Each slot carries seven SC-FDMA symbols in the case of normal CP, and six SC-FDMA symbols in the case of extended CP.

5.10.2 Physical Resource Blocks for SC-FDMA

As SC-FDMA can be regarded as conventional OFDM with a DFT-based precoder, the f our *g*rid for the uplink is similar to the one for the downlink, illustrated in figure 5.29, that is, it comprises a number of resource blocks in the time-frequency plane.

The number of resource blocks in each resource grid, NH depends on the uplink transmission bandwidth configured in the cell and should satisfy

$$N_{RB}^{min,UL} \leq n_{RB}^{UL} \leq N_{RB}^{max,UL}$$

Where $\mathrm{N}_{\mathrm{RB}}^{\mathrm{min,UL}} = 6,$ and $\mathrm{N}_{\mathrm{RB}}^{\mathrm{max,UL}} = 110$ Correspond to the smallest and largest uplink bandwidth respectively there are $\mathrm{N}_{\mathrm{ac}}^{\mathrm{RB}}\mathrm{X}\mathrm{N}_{\mathrm{aymb}}^{\mathrm{RB}}$

Resource elements in each resource block.

5.10.3 Resource Allocation

- Similar to the downlink, shared-channel transmission and channel-dependent scheduling are supported in the uplink. Resource allocation in the uplink is also performed at the eNode-B.
- Based on the channel quality measured on the uplink sounding reference signals and the scheduling requests sent from UES, the eNode-B assigns a unique time frequency resource to a scheduled UE, which achieves orthogonal intra-cell transmission.
- Such **intra-cell orthogonality** in the uplink is preserved between UEs by using timing advance such that the transport blocks of different UEs are received synchronously at the eNode-B.
- This provides significant coverage and capacity gain in the uplink over UMTS, which employ's non-orthogonal transmission in the uplink and the performance is limited by inter-channel interference.
- In general, SC- FDMA is able to support both localized and distributed resource allocation.
- In the current specification, only **localized resource allocation** is supported in the uplink, which preserves the **single-carrier property** and can better exploit the **multiuser diversity gain** in the

frequency domain.

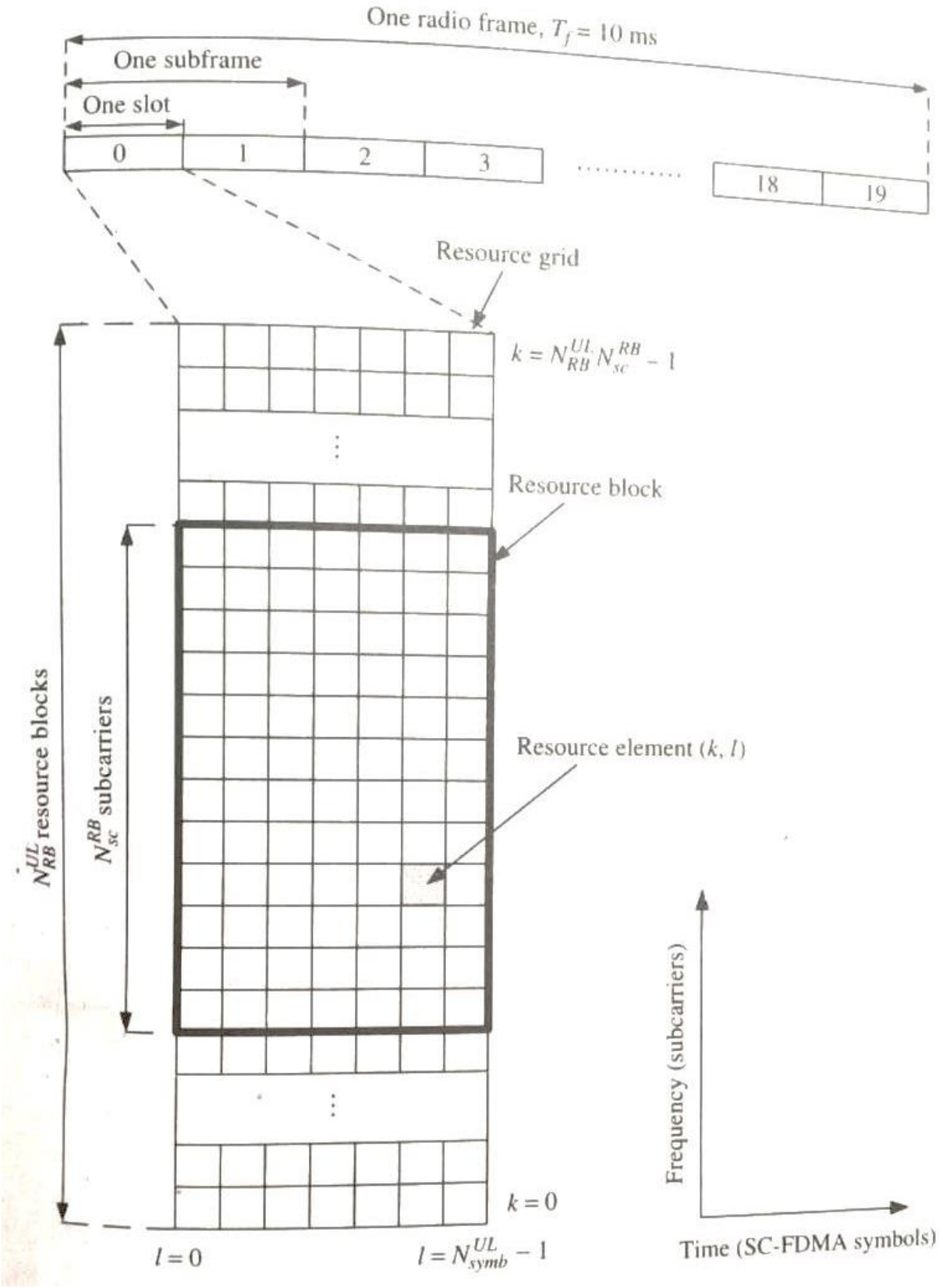

Fig. 5.29: The structure of the uplink resource gird

- Compared to **distributed resource allocation**, **localized resource allocation** is less sensitive to

frequency offset and also requires fewer reference symbols.

- The resource assignment information for the uplink transmission is carried on the PDCCH with DCI format 0, indicating a set of contiguously allocated resource blocks.
- However, not all integer multiples of one resource block are allowed to be assigned to a UE, which is to simplify the DFT design for the SC-FDMA transceiver.
- Only factors 2, 3, and 5 are allowed. The frequency hopping is supported to provide frequency diversity, with which the UEs can hop between frequencies within or between the allocated subframes.

5.10.4. Supported MIMO *M*odes

- For the MIMO modes supported in the uplink, the terminal complexity and cost are among the major concerns.
- MU-MIMO is supported, which allocates the same time and frequency resource to two UEs with each transmitting on a single antenna. This is also called **Spatial Division Multiple Access (SDMA).**
- The advantage is that only one transmit antenna per UE is required. To separate streams for different UEs, channel state information is required at the eNode-B, which is obtained through uplink reference signals that are orthogonal between UEs.
- Uplink MU-MIMO also requires power control, as the near-far problem arises when multiple UEs are multiplexed on the same radio **resource.**
- For UEs with two or more transmit antennas, closed loop adaptive antenna selection transmit diversity shall be supported.
- Here UE only needs one transmit chain and amplifier. The antenna selection is based on feedback from eNode-B.

TEXT BOOK

- "Fundamentals of LTE" Arunabha Ghosh, Jan Zhang, Jefferey Andrews, Riaz Mohammed, Pearson education (Formerly Prentice Hall, Communications Engg and Emerging Technologies), ISBN-13: 978-0-13-703311-9.