KEY enabling technologies and features of LTE

- *LTE design incorporates several important radio and core network technologies one among them is OFDM:*
- *OFDM is a technique of transferring large amount of digital data over a radio wave.*
- *Here a large radio signal is split into several sub radio signals through which the data is transmitted simultaneously at different frequencies to the receiver.*
- *Here the data is transmitted parallel across various carriers within the overall OFDM signal being split into a number of a parallel sub streams.*

Why OFDM Technique is used for LTE?

- ***Elegant solution to multipath interference:***
- *OFDM is a multicarrier modulation technique where a high bit rate data stream is divided into several parallel low bit rate streams.*
- *Each bit stream is modulated on separate carrier's .Splitting the data stream increases the symbol duration of each stream such that the multipath delay is only a fraction of the symbol duration.*
- ***Reduced Computational complexity:***
- ***OFDM can** be easily implemented using fft as the computational requirements grow with data rate or bandwidth.*
- *The computational complexity of OFDM can be shown as O(BlogTm).*
- ***Graceful Degradation Of Performance Under Excess Delay:***
- *The performance of OFDM system degrades gracefully as the delay spread exceeds the value designed for.*
- *Exploitation of frequency diversity: OFDM facilitates coding and interleaving across subcarriers in the frequency domain.*
- *This provides robustness against burst errors caused by portions of the transmitted spectrum undergoing fades.*
- *The channel bandwidth can be changed in OFDM without impacting the hardware design of the base station and the mobile station.*
- ***Enables efficient multi access scheme**: OFDM can be used as a multi access scheme by partitioning different sub carriers among multiple users.*
- *It provides the option of channel allocation to achieve capacity improvements.*
- ***Robust against narrowband interference:** Since the interference affects only a fraction of the carriers it is robust against narrowband interference.*
- ***Suitable for coherent demodulation:** It is easy to do pilot based channel estimation in OFDM systems*
- ***Facilitates the use of MIMO:** OFDM converts a frequency selective broadband channel into several narrow bands flat fading channels hence MIMO can be implemented.*
- *Thus increasing the system capacity.*

www.takeiteasyengineers.com

- ***Efficient Support of broadcast services:***
- *By synchronizing the base stations it is possible to operate an OFDM network as a single frequency network. This allows broadcast signals from different cells to combine over the air to enhance the received power and thus providing high data rate broadcast transmissions for a given transmit power. Thus increasing the efficiency of broadcast services.*

Disadvantages of OFDM

- *OFDM signals have high peak to average ratio which causes non linearity's and clipping distortion when passed through an RF amplifier.*
- *To overcome these problem power amplifiers need to be used.*
- *These are expensive inefficient and also increase the cost of the transmitter.*

Multi antenna techniques:

- *Transmit diversity: This technique combats multipath fading.*
- *Here copies of the same signal are coded differently over multiple transmit antennas.*
- *LTE transmit diversity is based on space frequency block coding complemented with frequency shift time diversity.*
- *It is used for downlink channels.*
- *Transmit diversity increases system capacity and cell range.*

Beam forming:

- *Multiple antennas can be used in the same direction such that it focuses the transmitted beam in the direction of the receiver and away from interference thereby increasing the signal to interference ratio.*
- *This increases the covering range, capacity, and reliability and battery life.*
- *It can be used in providing angular information for user tracking.*
- *LTE supports beam forming in the downlink.*

Spatial Multiplexing:

- *In spatial multiplexing multiple independent streams can be transmitted in parallel over multiple antennas and are separated at the receiver using multiple receive chains through signal processing.*
- *It provides data rate and capacity gains proportional to the antennas used.*
- *It works well under SNR and light load conditions and hence has an effect on peak rates.*

Multi user MIMO:

- *Due to the complexity and cost spatial multiplexing is not used in the uplink.*
- *Multi user MIMO allows multiple users in the uplink each with a single antenna to transmit using the same frequency and time resource.*
- *Signals from different multi user MIMO are separated at the base station receiver using accurate channel state information of each user obtained through uplink reference signals that are orthogonal between users.*

LTE NETWORK ARCHITECTURE:

- *The core network design supported by LTE is called Evolved Packet Core.*
- *It is designed to provide high capacity, reduced latency, flat architecture that dramatically reduces cost and supports advanced real time and media rich services with enhanced quality of experience.*
- *It supports radio access networks such as LTE.*

www.taketeasyengineers.com

- *EPC includes functions such as access control, packet routing and transfer, mobility management, security radio resource management and network management.*

***EPC** includes four new elements:*

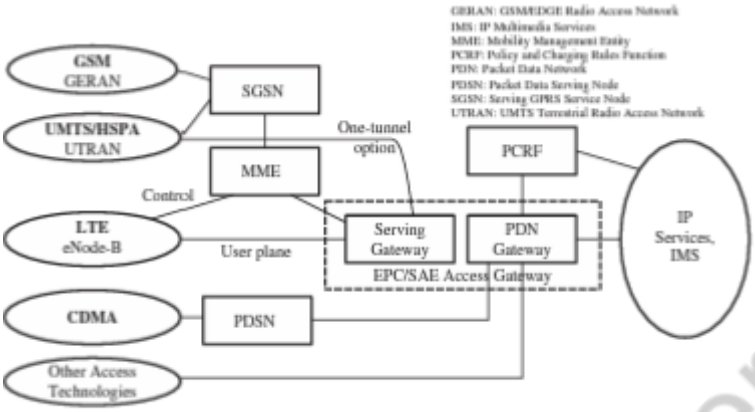

Evolved Packet Core architecture.

1) Serving Gateway (SGW):

- *Terminates the interface towards 3GPP radio access networks. It acts as a separator between RAN and core network and manages user plane mobility.*
- *It serves as the mobility anchor when terminals move across areas served by different eNode-B elements UTRAN.*
- *SGW does downlink packet buffering and initiation of network triggered service request procedures.*
- *Other functions include lawful interception, packet routing and forwarding, transport level packet marking in the uplink and the downlink accounting support for per user and inter operator charging.*

2) Packet Data Network Gateway (PGW):

- *It acts as a termination point of the EPC towards other Packet Data Networks such as internet, private IP network or the IMS network providing end user services.*
- *It provides functions such as IP address allocation, policy enforcement packet filtering and charging support.*
- *Policy enforcement includes operator defined rules for resource allocation to control data rate, QOS and usage.*

3) Mobility Management Entity (MME):

- *It performs the signaling and control functions to manage the user terminal access to network connections, assignment of network resources and mobility management functions such as idle mode location tracking, paging, roaming and handovers.*
- *MME controls all control plane functions related to subscriber and session management.*
- *It provides security functions such as providing temporary identities for user terminals inter-acting with Home Subscriber Server for authentication and negotiation of ciphering and integrity protection algorithm.*

www.takeiteasyengineers.com

- *It is responsible for selecting the appropriate serving and PDN gateways, selecting legacy gateways for handovers.*
- *MME manages thousands of E node elements.*

4) Policy and Charging Rules Function (PCRF):

- *The PCRF is a concatenation of policy decision Function and charging rules function.*
- *The PCRF interfaces with PDN gateway and supports service dataflow detection, policy enforcement and flow based charging.*

IP-BASED FLAT NETWORK ARCHITECTURE:

- *This basically includes a flat radio and core network architecture. Here FLAT implies lesser nodes and a lesser hierarchical architecture.*
- *Fewer nodes reduces the infrastructure cost,fewer interfaces and protocol related processing .*
- *Fewer nodes reduces interoperability provides better optimization of radio interfaces merging some control plane protocols and short session start up time.*
- *Key aspect of LTE flat architecture is that all services including voice are supported on the IP packet network using IP protocols.*
- *LTE has a single evolved packet switched core over which all services are supported providing huge operational and infrastructure savings.*

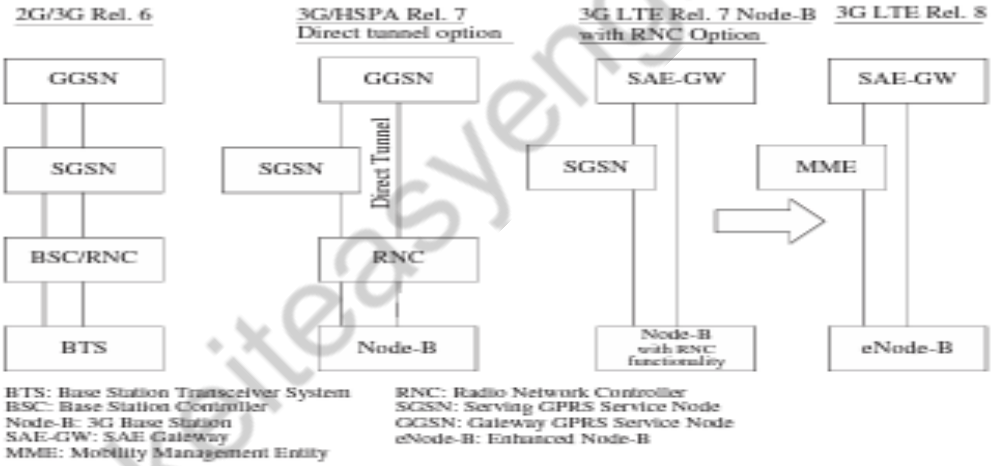

3GPP evolution toward a flat LTE SAE architecture.

- *The **release 6** architecture has four elements the*
- *a) Base station or the Node b) radio network controller (RNC) c) serving GPRS service node (SGSN)d) gateway GRPS service node.*
- ***Release 7:** Had a direct tunnel option from the RNC to GGSN which eliminated SGSN from the path.*
- ***LTE:** Has two elements in the data path enhanced node B and system architecture Evolution gateway (SAE-GW).The control path includes a functional entity called MME which provides control plane functions related to subscriber, mobility and session management.*
- *The MME and SAE-GW could be collected into a single entity called the access gateway.*

www.takeiteasyengineers.com

MODULE 1: BROADBAND WIRELESS CHANNEL

- *In this topic we discuss the fundamental factors affecting the received signal in a wireless system and how they can be modeled using the relative value of the parameters.*
- *Here we introduce the overall channel model and discuss the large scale trends that affect this model.*
- *The overall model describing the channel in discrete time is a simple tap delay line(TDL):*
- $\boldsymbol{h[k,t]=h_o\delta[k,t]+h_1\delta[k-1,t]+\ldots+h_v\delta[k-v,t]}$
- *Here the discrete time channel changes with respect to t and has non negligible values over a span of v+1 channel taps.*
- *The channel is sampled at a frequency f_s=1/T where T is the sample period.*
- *Hence the duration of the channel is vT.*
- *Assuming that the channel is static over a period of (v+1)T seconds the output of the channel can be described as*
- $$y[k,t]=\sum_{j=-\infty}^{j=\infty} h[j,t]x[k-j]=h[k,t]*x[k]$$
- *Where x[k] is an input sequence of data symbols with rate $\frac{1}{T}$.*
- *In a simple notation the channel can be represented as a time varying (v+1)$\times$ T $seconds$ the output of the channel can then be described as*
- $\boldsymbol{y[k.t]=\sum_{-\infty}^{\infty} h[j,t]x[k-j]=h[k,t]*x[k]}$ *where x[k]is an input sequence of data symbols with rate 1/T * denotes convolution.*
- *Hence the channel can be represented as a time varying (v+1)x1 column vectors.*
- *$h(t)=[h_o(t)\ h_1(t)\ldots\ldots h_v(t)]^T$.*
- *Although the tapped delay model is general and accurate it is difficult to design a communication system for the channel without knowing some of the key attributes about h(t).*

PATHLOSS:

- *The main difference between the wired and wireless channel is the amount of power that actually reaches the receiver.*
- *If an isotropic antenna is used the propagated signal produces a spherical wave front so the energy received at the antenna is inversely proportional to the spherical surface area $4\pi d^2$ where d is the distance.*
- *The Friis formula or the free space path loss formula is given as*
- $\boldsymbol{P_r=P_t\times\lambda^2G_tG_r/(4\pi d^2)}$ *Where P_r and P_t are the received and transmitted powers.Here we can see that $P_r\propto\lambda^2$ which means that $P_r\propto 1/f_c^2$.*
- *Hence higher frequencies suffer greater power loss than lower frequencies. Hence lower frequencies are desirable and more crowded.*

www.tareteasyengineers.com

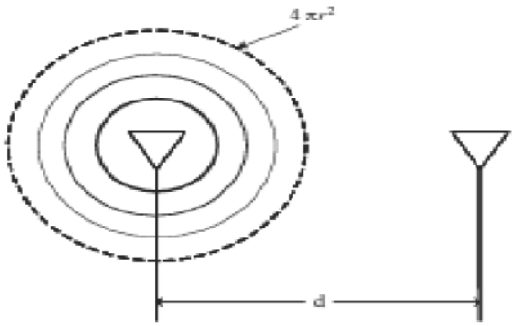

Figure 2.2 Free space propagation.

- *Therefore bandwidths at higher carrier frequencies are easily available and hence less expensive.*
- *Hence a high rate low cost system would generally prefer to work at higher frequencies.*
- But, the terrestrial propagation environment is not free space.
- *The reflections from the Earth or other objects would actually increase the received power since more energy would reach the receiver.*
- *However, because a reflected wave often experiences a 180-degrees phase shift, at relatively large distances the reflection serves to create* ***destructive interference.***
- *Therefore, the common 2 - ray approximation for path loss is:*
- $\boldsymbol{P_r = P_t h_t^2 h_r^2 G_t G_r / (d^4)}$
- *This is significantly different from free-space path loss in several aspects.*

Empirical Path Loss Formula

- *In order to more accurately describe different propagation environments, empirical models are often developed using experimental data.*
- *One of the simplest and most common is*
- $\boldsymbol{P_r = P_t P_o (\frac{d_o}{d})^{\propto}}$
- *Where α is the path loss exponent and the measured path loss P_0 at a reference distance of d_0.*

Shadowing

- *Obstacles located between Transmitter & Receiver cause temporary degradation in received signal strength.*

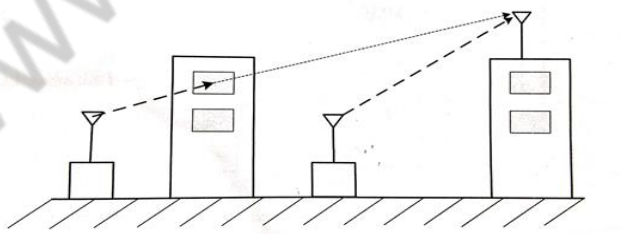

www.takeiteasyengineers.com

- *Modeling the locations of all objects in every possible communication environment is generally impossible.*
- *Therefore, a random effect, called as **shadowing**, is introduced to measure these variations.*
- *With shadowing, the empirical path loss formula becomes*
- $\boldsymbol{P_r = P_t P_o \chi (\frac{d_o}{d})^{\propto}}$
- *Where α is the path loss exponent and the measured path loss P_0 at a reference distance of d_0.*
- $\boldsymbol{\chi}$ *Is the sample of the shadowing random process. Shadowing is also called as large scale fading.*
- *The shadowing value is modeled as lognormal random variable given as* $\boldsymbol{\chi = 10^{\frac{x}{10}}}$
- *Where x ≈N(0,σ_s^2) were N(0,σ_s^2) is a gaussian distribution with mean 0 and variance σ_s^2.*
- *Thus, shadowing is an important effect in wireless networks because it causes the received SINR to vary dramatically over long time scales.*
- *In some given cell, reliable high-rate communication may be nearly impossible.*

CELLULAR SYSTEMS:

- *In cellular systems, the service area is subdivided into smaller geographic areas called **cells**.*
- *Each cell is served by its own base station (BS).*
- *In order to minimize interference between cells, the transmit power level of each BS is regulated to be just enough to provide the required signal strength at the cell boundaries.*
- *The same frequency channels can be reassigned to different cells, as long as those cells are spatially isolated.*
- *The reuse of the same frequency channels should be intelligently planned in order to maximize the geographic distance between the co-channel base stations.*
- *Some **advantages of Cellular systems** are:*

  Cellular systems allow the overall system capacity to increase by simply making the cells smaller & turning down the power.

  Cellular systems support user mobility, seamless call transfer from one cell to another is pro- vided.

  The handoff process provides a means of the seamless transfer of a connection from one BS to another.

- *Small cells give a large capacity & reduce power consumption.*
- *Primary drawbacks are, **system needs more Base Stations, and their associated hard- ware costs, and the need for frequent handoffs.***

www.takeiteasyengineers.com

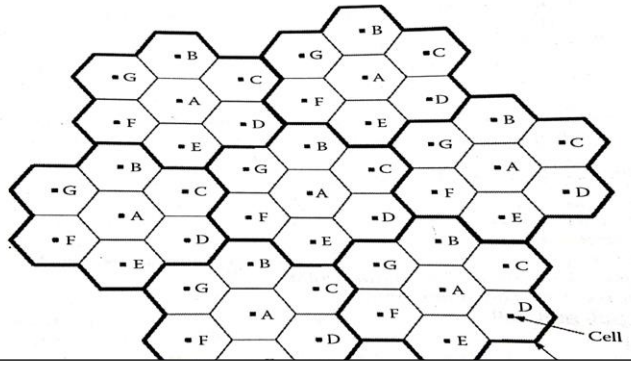

Standard figure of a hexagonal cellular system with f = 1/7

Cell Sectoring:

- *The performance of wireless cellular systems is significantly limited by co-channel interference (CCI).*
- *This comes from other users in the same cell or from other cells.*
- *In Cellular Systems, Other Cell Interference (OCI) is a decreasing function of the radius of the cell (R) & the distance to the center of the neighboring co-channel cell and an increasing function of transmit power.*
- *Since the SIR is so bad in most of the cell, it is desirable to find techniques to improve it without sacrificing so much bandwidth.*
- *A popular technique is to sectorize the cells, which is effective if frequencies are reused in each cell.*
- *Directional antennas are used instead of Omni-directional antenna at the base station.*

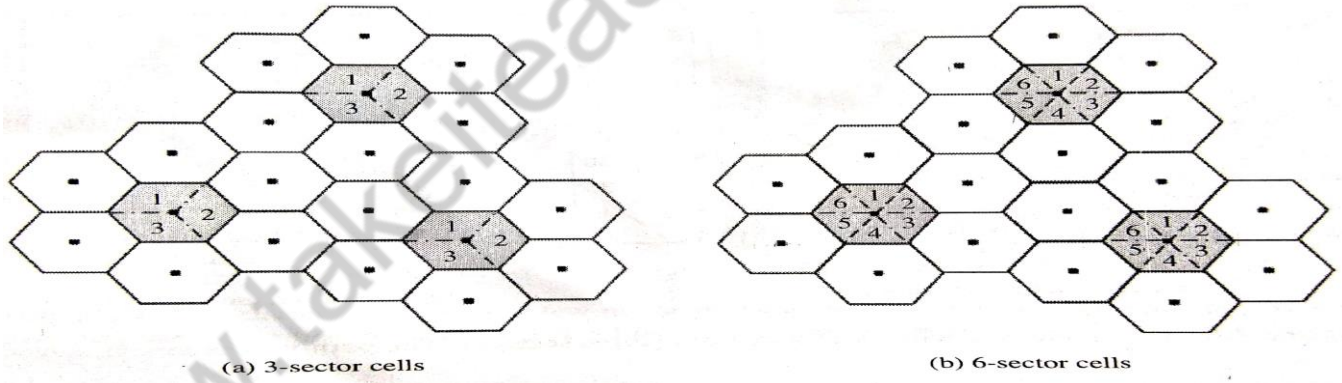

3-Sector (120-degree) and 6-Sector (60-degree) cells.

The Broadband Wireless Channel: Fading

- *One of the most disturbing aspects of wireless channels is the fading phenomenon.*
- *Unlike path loss or shadowing, which are large-scale attenuation effects due to distance or obstacles, fading is caused by the reception of multiple versions of the same signal.*

www.takeiteasyengineers.com

- *The multiple received versions are caused by reflections that are referred to as* ***multipath.***

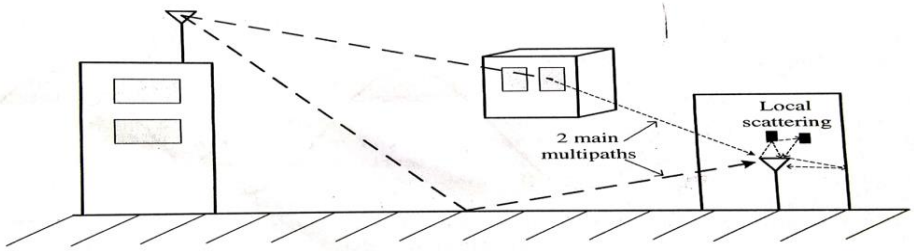

Fig: The channel may have a few major paths with quite different lengths, and then the receiver may see a number of locally scattered versions of those paths.

- *Depending on the phase difference between the arriving signals, the interference can be either constructive or destructive.*
- *This causes a very large observed difference in the amplitude of the received signal even over very short distances.*
- *Let us consider the time-varying tapped-delay line channel model.*
- *As either the Tx^r or Rx^r move relative to each other, the channel response* ***h(t)*** *will change.*
- *Movement in the propagation environment will also cause the channel response to change over time.*
- *This channel response can be thought of as having two dimensions:a delay dimension* ***τ*** *& a time dimension* ***t***
- *Since the channel is highly variant in both the τ &* ***t*** *dimensions, in order to be able to discuss what the channel response is we must use statistical methods.*
- *The most important & fundamental function used to statistically describe broadband fading channels is the two-dimensional auto correlation function, A(Δτ, Δt).*

And it is defined as

$$A(\Delta\tau, \Delta t) = E[h(\tau_1, t_1)h^*(\tau_2, t_2)]$$
$$= E[h(\tau_1, t)h^*(\tau_2, t + \Delta t)]$$
$$= E[h(\tau, t)h^*(\tau + \Delta\tau, t + \Delta t)$$

The channels described by this auto correlation function are referred to as ***Wide Sense Stationary Uncorrelated Scattering (WSSUS).***
This is the most popular model for wide band fading channels.
From the auto correlation function, following wireless channel parameters can be estimated.
Delay Spread τ: The *delay spread is an important factor of a wireless channel as it specifies the duration of the channel impulse response $h(\tau, t)$.The delay spread is the amount of time that elapses between the first arriving path and the last arriving path.The maximum delay spread that can occur is represented by τ_{max}.*

www.takeiteasyengineers.com

Coherence Bandwidth: *The coherence bandwidth gives the measure of the maximum separation between a frequency f1 and a frequency f2 where the channel frequency response is correlated.It is represented by* B_c

$$|f_1 - f_2| \leq Bc = H(f_1) \approx H(f_2)$$

$$|f_1 - f_2| \leq Bc = H(f_1) \approx H(f_2) \text{ are uncorrelated}$$

It also describes the range of frequencies over which the channel stays constant.

It is related to delay spread as $B_c = \frac{1}{5\tau_{max}}$.

Doppler Spread:*It is the motion between transmitter and the receiver.If the transmitter and the receiver are moving fast the Doppler is large and the channel will change much more frequently.*

It is given as $f_d = f_c v/c$

Were f_c *is the carrier frequency and c is the speed of light.*

Coherence Time, T_c*: It is the period of time for which the channel is correlated. It is mathematically given as*

$$|t_1 - t_2| \leq Tc = H(t_1) \approx H(t_2)$$

$$|t_1 - t_2| \leq Tc = H(t_1) \approx H(t_2) \text{ are uncorrelated}$$

Coherence time and the Doppler spread are related as

$$\boldsymbol{t_c = \frac{1}{f_D}}$$

Angular Spread, ϑ_{rms} ***:****It refers to the statistical distribution of the angle of the arriving energy.*

A large ϑ_{rms} *implies that the energy is coming in from many directions whereas a small* ϑ_{rms} *implies that the received energy is more focused.*

Coherence distance: *It is the distance between any physical positions separated by a value d .The amplitude and phase of the received signal at these positions are uncorrelated.*

$$\boldsymbol{D_c \approx \frac{0.2\lambda}{\theta rms}}$$

For Rayleigh fading which assumes a uniform angular spread the well-known relation $\boldsymbol{D_c \approx \frac{9\lambda}{16\pi}}$ *the coherent distance increases with the carrier wavelength* λ *so high frequency systems have shorter coherence distances.*

Modeling broadband Fading channels: *In order to design a wireless communication system it's important to design channel models that incorporate variations in time frequency and space.The two major class of channel models are statistical and emphirical.*

- *Statistical models are simpler and are useful for analysis and simulations.*
- *The empirical models represent a specific type of channel more accurately.*

A Pedagogy for Developing Statistical Models

The methods for modeling wireless channels are broken into three steps:

Step 1: First consider just a single channel sample corresponding to a single principle path between the transmitter & receiver that is

$$h(\tau, t) \rightarrow h_0 \delta(\tau, t)$$

Step 2: Next consider how this channel sample h_0 *evolves over time, that is:*

$$h(\tau, t) \rightarrow h_0(t)\delta(\tau)$$

www.takeiteasyengineers.com

Statistical Channel Models

- *The received signal in a wireless system is the superposition of numerous reflections or multi path components.*
- *In this section, we will overview statistical methods that can be used to characterize the am- plitude & power of received signal r(t) when all the reflections arrive at about the same time.*
- *The following statistical models are considered in this section:*

  1. *Rayleigh Fading Model*
  2. *Line-of-Sight Channels - The Rician Distribution*
  3. *A more general model: Nakagami - m fading*

Rayleigh Fading Model

- *Rayleigh fading is a reasonable model when there are many objects in the environment that scatter the radio signal before it arrives at the receiver.*
- *The in-phase (cosine) and quadrature (sine) components of received signal r(t) follow two independent time - correlated Gaussian random processes.*
- *The distribution of the envelope amplitude is given as* $|r| = \sqrt{(r_I^2 + r_Q^2)}$*is rayleigh distribution.*
- *Formally it is given as* $f_{|r|}(x) = \frac{2x}{P_r} e^{\frac{-x^2}{P}}$
- *The received power* $|r|$^$2 = \sqrt{(r_I^2 + r_Q^2)}$ *is exponentially distributed.*
- *Formally we can say that* $f_{|r|^2}(x) = \frac{1}{P_r} e^{\frac{-x}{P}}$

Where P_r *is the average received power due to shadowing and path loss .The gaussian random variables* r_I *and* r_Q *have zero mean and the variance is given as* $\sigma^2 = \frac{P_r}{2}$.

- *The phase of r(t) is given as* $\theta_r = tan^{-1}(\frac{r_Q}{r_I})$ *which is uniformly distributed from 0 to* 2π *or equivalently from* $[\pi, -\pi]$.

LoS Channels - The Rician Distribution

- *An important assumption in the Rayleigh fading model is that, the arriving reflections have a mean of zero.*
- *For LoS signal, the received envelope distribution is more accurately modeled by a Rician distribution.*

www.taketeasyengineers.com

- It is given by $f_{|r|}(x) = \frac{x}{\sigma^2} e^{-\frac{x^2+\mu^2}{2\sigma^2}} I_0(\frac{x\mu}{\sigma^2})$ $\quad$ x≥ 0
- *Where μ^2 is the power of the LOS component and I_0 is the 0th order modified Bessel function of the first kind. The Rician phase distribution ϑ_r is not uniform in [0, 2π] and is not distributed by a straight forward expression.*
- *It is more generalization of the Rayleigh distribution.*

A more general model: Nakagami - m Fading

- *The Nakagami distribution is relatively new, being first proposed in 1960.*
- *It has been used to model attenuation of wireless signals traversing multiple paths and to study the impact of fading channels on wireless communications.*
- *The Probability Density Function (PDF) of Nakagami - m fading is parameterized by m and is given as* $f_{|r|}(x) = (2m^m x^{2m-1}/\Gamma(m)P_r^m)xe^{-mx^2/P_r}$ $\quad$ $m\geq 0.5$
- *The power distribution for nakagami fading is given as* $f_{|r|^2}(x) = \{(\frac{\frac{m}{P_r})^m x^{m-1}}{\Gamma(m)}\}e^{-mx/P_r}$.

Empirical Channel models:

- *Actual environments are too complex to model accurately.*
- *In practice, most simulation studies use empirical models that have been developed based on measurements taken in various real environments.*
- *In 1968, **Okumura** conducted extensive measurements of base station to mobile signal atten- uation throughout Tokyo and developed a set of curves giving median attenuation relative to free space path loss.To use this model one needs to use the empirical plots given in his paper. This is not very convenient to use.So in 1980, **Hata** developed closed-form expressions for Okumura's data.*

LTE Channel Models for Path Loss : Hata Model

- *According to **Hata model** the path loss in an urban area at a distanced is:*
- *$PL_U[Db]$ =[44.9 − 6.55$log_{10}(h_B)$]$log_{10}(d)$+69.55 + 26.16$log_{10}(f_c)$− 13.82$log_{10}(h_B)$+C1 were C1 is the correction factor that varies depending on the size of the city.For a medium city it is given as*
- *C1=0.8+(1.1$log_{10}(f_c) - 0.7)h_m - 1.56log_{10}(f_c)$.*
- *Where L_U = Path loss in Urban areas (dB) h_B = Height of BS antenna (meters) f_c = Carrier Frequency (MHz) d = Distance between BS & MS (Kms).*

COST Hata Model

- *Hata model is intended for large cells with BS being placed higher than the surrounding rooftops.*

*Both Okumura & Hata models are designed for **150-1500 MHz** and are applicable to the first generation*

www.takeeasyengineers.com

cellular systems.

- *The European Cooperative for Scientific and Technical (COST) research extended the Hata model to 2 GHz as follows:*
- $P_{L,Urban} = 46.3 + 33.9\log_{10}(f_c) - 13.82\log_{10}(h_t) - a(h_r) + [44.9 - 6.55\log_{10}(h_t)]\log_{10}(d) + C_m$
- *This model is restricted to the following range of parameters:*

• *Carrier Frequency*	• *1.5 GHz to 2 GHz*
• *Base Antenna Height*	• *30 m to 300 m*
• *Mobile Antenna Height*	• *1 m to 10 m*
• *Ditance d*	• *100 m to 20 Km*

- *COST Hata model is designed for large and small macro-cells, i.e., base station antenna heights above rooftop levels adjacent to base station.*

Mitigation of Narrowband Fading:

- *The probability of bit error (BER) is the principle metric of interest for the physical (PHY) layer of a communication system.*
- *For a QAM - based modulation system, the BER in an AWGN (no fading) can be approximated by the following bound:*
- $P_b \leq 0.2e^{-1.5SNR/(M-1)}$
- *The BER decreases rapidly (exponentially) with SNR.*
- *So decreasing SNR linearly causes the BER to increase exponentially. However in a fading channel the BER becomes a random variable which depends on the channel strength .Hence when the channel is in deep fade it dominated the average BER.*
- *When the required average BER is very low all errors are made while in deep fades.*
- *Hence* $P_b = \frac{M}{SNR}$*.Hence BER goes down with SNR only inversely.*
- *Diversity is the key to overcoming the potentially devastating performance loss from fading channels.*
- ***Spatial Diversity:*** *Spatial Diversity is a very powerful form of diversity and is desirable since it doesn't necessitate redundancy in time or frequency.*
- *It is achieved by adding two more antennas at either the receiver or the transmitter. The simplest example is two antennas spaced sufficiently apart are placed at the receiver and the one receiving stronger signal is selected.*
- *The two signals undergo uncorrelated fading. Here half of the received signal is completely discarded.*

www.takeeasyengineers.com

- ***Coding and interleaving:*** *Another form of diversity in digital communication is natural pair of coding and interleaving. Here coding indicates the use of error correction codes.*
- *These introduce redundancy at the transmitter to allow the receiver to recover the input signal even if the received signal is significantly degraded by attenuation, noise and interference. Coding techniques can be defined by their coding rates* $r \leq 1$.
- *Example 1: for an output of a rate 1/3 code has 3 times the original rate which means it introduces three redundant bits for every one bit information. If the transmission rate is constant the 1/3 rate code lowers the transmitted by a factor of 3 .*
-

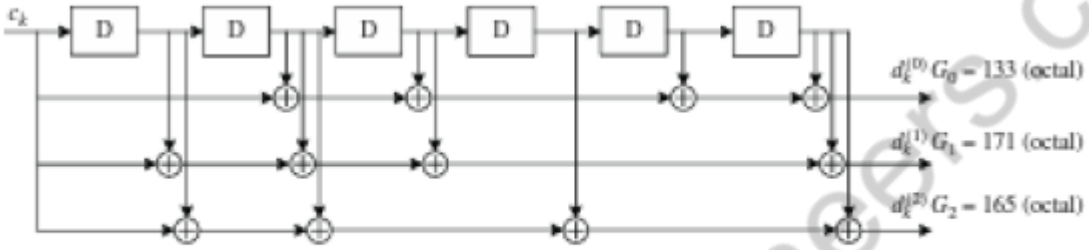

Figure 2.22 The rate $\frac{1}{3}$ convolutional encoder defined by LTE for use in the Broadcast Channel (BCH).

- *The above example shows* ***a Convolution encoder*** *defined by LTE for use in the Broadcast channel. It has one input* c_k *and 3 outputs* d_k*.The constraint length of this code is 7.There are 6 delay elements or 64 possible states.The generator polynomial for for each of the three outputs is given an octal notation.*
- G_o*=133 in binary form is 1011011 where a 0 means the output doesn't include the tap but 1 does. Hence* d_k^0
- *Includes modulo-2 summed contributions from the input and after delay elements 2, 3, 5 and 6.All optimal codes include in each output the first and the last taps for maximum memory.*
- *The job of the decoder is to take degraded output symbols* $\hat{d_k}$*after demodulation and produce and estimate* $\hat{c_k}$ *of the original information signal* c_k*.If for a given packet* $\hat{c_k} = c_k$ *then the packet was successfully received otherwise it must be retransmitted.*
- ***Example 2:Turbo codes*** *A rate 1/3 code is also deployed by LTE for uplink and downlink shared channels.The encoder is a parallel concatenated convolutional code that comprises 8 state rate ½ systematic encoder and an 8 state rate 1 systamatic encoder that operates on an interleaved input sequence for a net coding 1/3.*
- *Here systematic means a function of both input bits and the previous states while the other outputs are simply passed through to the output.*

www.takeiteasyengineers.com

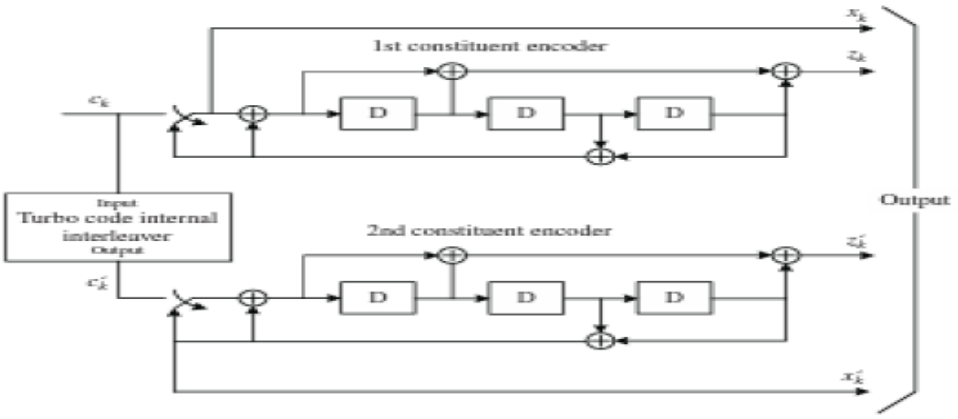

I

- ***INTERLEAVING:****It is used in both convolutional coding and turbo coding .The interleaver shuffles the coded bits to provide robustness to burst errors .It spreads out the coded bits so that the effect of of burst error after de interleaving are spread over an entire frame.*
- *In turbo coding an interleaver is used between the concatenated codes .At the receiver the decoders for each encoder pass their soft outputs back and forth via a deinterleaver that decorrelates these values.*
- *The decoder proceeds to iterate back and forth between each decoder until the symbol estimates converge that is the interleaver is no longer able to decorrelate the soft outputs.*
- *The interleaver packt is usually constrained to a single packet to reduce interleaving and de interleaving delays.*
- *There is an additional channel interleaver used to send control information over the uplink shared channel in order to spread it out over a wide range of sub carriers.*

Automatic Repeat request:

- ***ARQ is*** *MAC layer retransmission protocol that allows erroroneous packets to be quickly retransmitted.*
- *It works along with PHY layer ECC'S and parity checks to ensure reliable links.*
- *ARQ retransmits the entire packet even for a single bit error.*
- *Hybrid ARQ combines both ARQ and FEC to avoid an unnecessary retransmission.*
- *In H-ARQ a channel encoder such as a convolutional encoder is used to generate additional redundancy to the information bits.*
- *However instead of transmitting all the bits only a fraction of the encoded bits are transmitted.*
- *This is achieved by puncturing some of the encoded bits to create an effective code rate greater than the native code rate of the encoder.*
- *After transmitting the encoded and punctured bits the transmitter waits for an acknowledgement from the receiver to see if the receiver was able to decode the information bits from the transmission.*
- *If the receiver was able to decode then its done otherwise the transmitter can resend a copy of the encoded bits.*
- *During retransmission the transmitter sends a copy of the encoded bits that is identical to the first*

www.taketeasyengineers.com

transmission and the receiver combines the received bits with the previous transmission.

- *Since the encoded bits are the same in all transmissions the receiver can combine all the transmissions to increase SNR.*

ADAPTIVE MODULATION AND CODING:

- ***LTE** systems employ adaptive modulation and coding (AMC) in order to take advantage of fluctuations in the channel over time and frequency.*
- *The basic idea is to transmit at a high data rate when the channel is good and transmit at a low data rate when the channel is poor in order to avoid excessive drop of packets.*
- *Lower data rates are achieved by using a small constellation such as QPSK and larger data rates are achieved using larger constellations such as 64 QAM.*
- *Depending on the channel gain of the transmitter AMC chooses the required modulation technique so that the highest possible data rate can be achieved.*
- *An alternative objective is to pick up the modulation or coding combination that provides maximum throughput.*
- *A block diagram is given below for simplicity a single user system is considered which attempts to transmit as quickly as possible through the channel with a variable SINR.*
- *The goal of the transmitter is to transmit data from its queue as quickly as possible subjected to data being demodulated and decoded reliably at the receiver.*
- *Feedback is critical in AMC and the transmitter needs to know the channel SINR.*

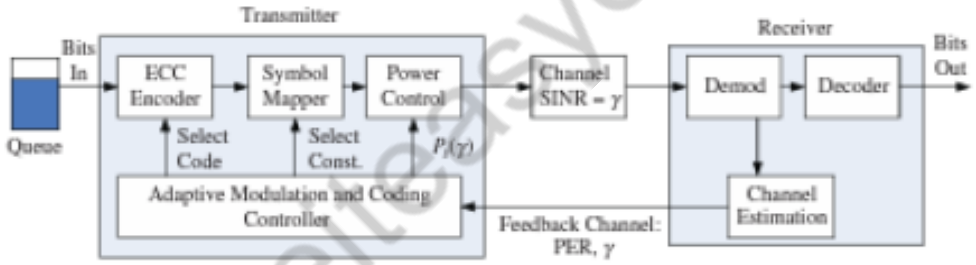

Figure 2.24 Adaptive modulation and coding block diagram.

MITIGATION TO BROADBAND FADING:

- *In LTE broadband channel symbol interference is a very serious problem.This is due to frequency selective fading cause dispersion in time and frequency.Choosing a technique to effectively combat ISI is centralized design for high data rate system.*
- *Techniques for ISI Mitigation:*
- *Spread Spectrum and RAKE Reciever*
- *Equalisation*
- *Multicarrier Modulation OFDM*
- *Single Carrier Modulation with frequency Domain Equalisation*

Spread Spectrum and Rake Recievers:

www.takeeasyengineers.com

- *It is a technique of transmitting narrowband signal in a wide band channel called spread spectrum.*
- *Spread Spectrum Techniques are broken down into types:*
- ***Direct sequence spread spectrum:****It is also known as CDMA and is widely used in cellular networks and is effective at multiplexing a large number of variable rate users in an environment.*
- ***Frequency Hopping Spread Spectrum:****It is used in low rate wireless LANS like Bluetooth and also for its interference averaging properties in GSM cellular networks.*
- *Spread Spectrum techniques is not an appropriate technology for high data rates due to self interference.*
- *Although this self interference can be corrected with an equalizer this largely defeats the pupose of using spread spectrum to help with ISI.*

Equalisation:

- *Equalisers are an alternative of for ISI suppression since they don't require additional antennas or Bandwidth and have moderate complexity.*
- *Equlaisers are implemented at the receiver and attempt to reverse the distortion introduced in the channel.*

TWO types of Equalisers:

- *A linear equalizer simply runs the received signal through a filter that roughly models the inverse of the channel.*
- *The problem with this approach is that it inverts not only the channel but also the received noise.*
- *This noise enhancement can severely degrade the receiver performance especially in a wireless channel with deep frequency fades.*
- *Linear recievers are relatively simple to implement but achieve poor performance in a time varying and severe ISI channel.*

Non Linearization:

- *A nonlinear equalizer uses previous symbol decisions made by the receiver to cancel out their subsequent interference and so is often called a decision feedback equalizer.*
- *One problem with this approach is that it is common to make mistakes about what the prior symbols were which causes error propogation.*

Multicarrier Modulation:

- *Multicarrier modulation is that rather than fighting the time dispersive channel .*
- *For a large number of subcarriers (L) used in parallel so that the symbol time for each goes from T to LT.*
- *In other words rather than sending a single signal with data rate R and bandwidth B why not send L signals at the same time each having bandwidth B/L and data rate R/L.*
- *In this way if B/L $\ll B_c$ each of the signals will undergoe approximately flat fading and the time dispersion for each of the signal is negligible.*
- *As long as the number of the subcarriers L is large enough the condition B/L $\ll B_c$ can be met.*

Single Carrier Modulation with Frequency Domain Equalisation

- ***A*** *primary drawback of OFDM approach has a high peak to average ratio.*

www.takeiteasyengineers.com

- *One can transmit a single carrier signal with a cyclic prefix which has low PAR and then do all the processing at the receiver.*
- *Processing consists of fast Fourier Transform to move the signal into the frequency domain a 1 Tap frequency equalizer and then an inverse FFT to convert back to the time domain for decoding and detection.*
- *In addition to eliminating OFDM'S PAR problem an additional advantage of this approach for the uplink is the potential to move the FFT and IFFT operations to the base stations.*
- *In LTE because multiple uplink users share the frequency channel at the same time the mobile station still must perform FFT and IFFT operations.*
- *The resulting approach known in LTE as Single carrier Frequency division multiple access.*

www.takeiteasyengineers.com

•

www.takeiteasyengineers.com