A4000 Rb

CLOCKS AND LOGIC

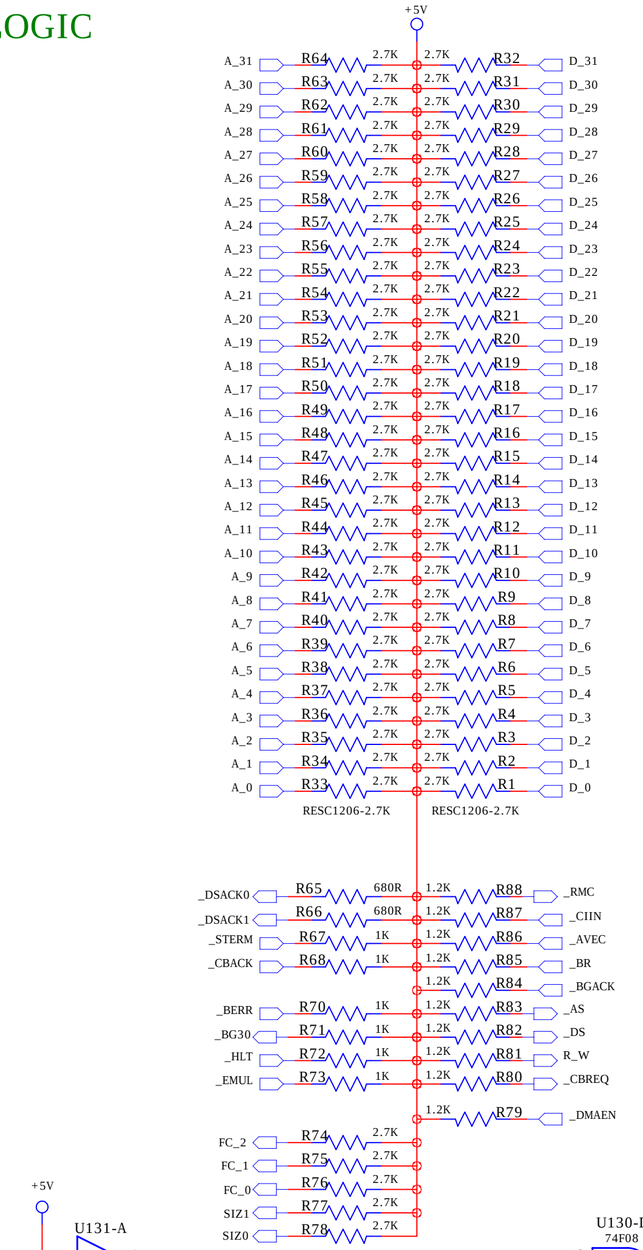

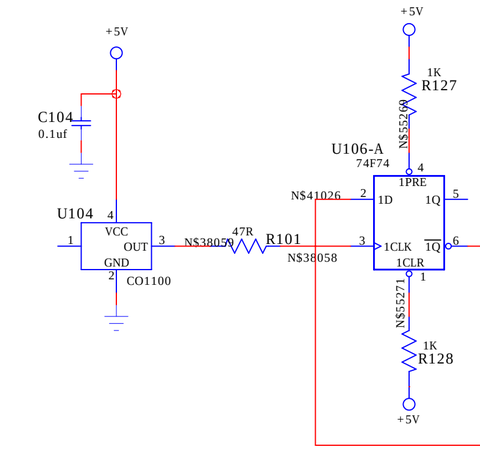

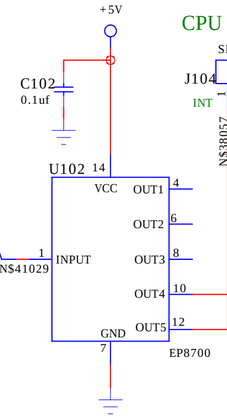

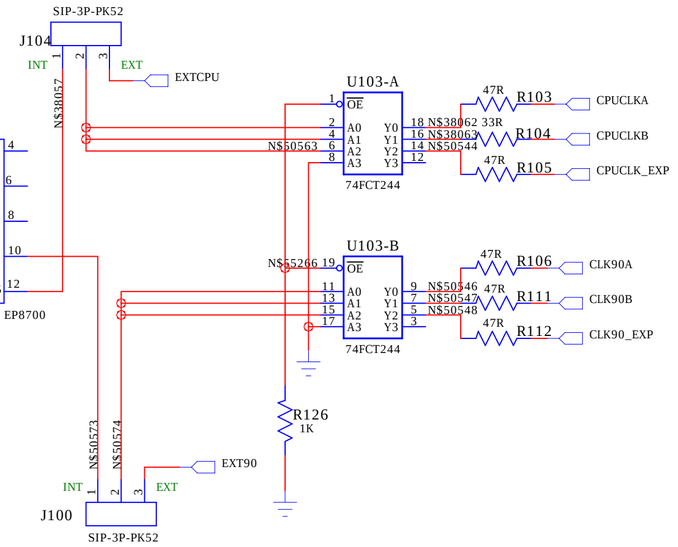

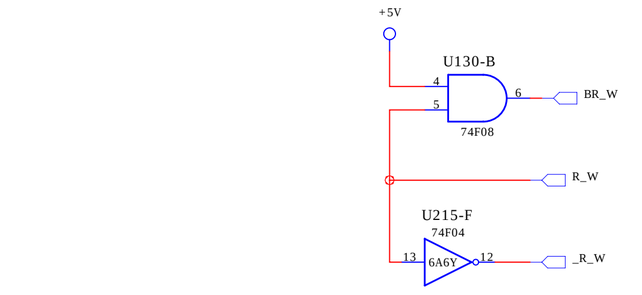

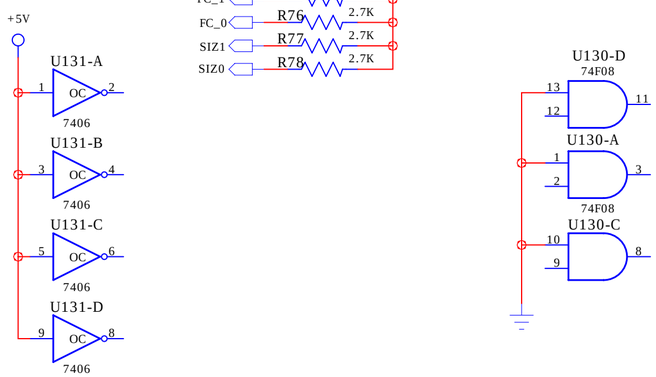

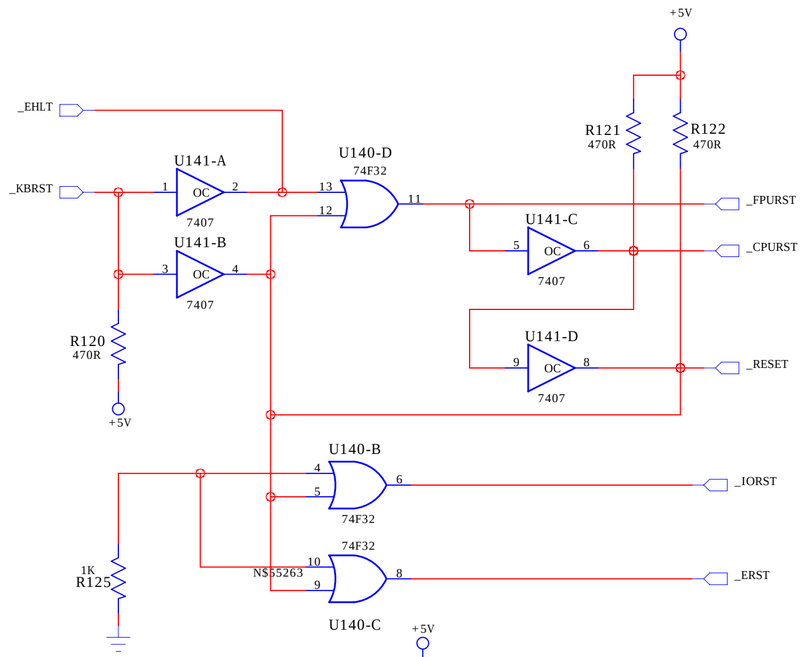

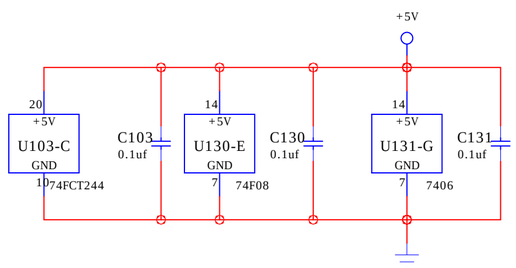

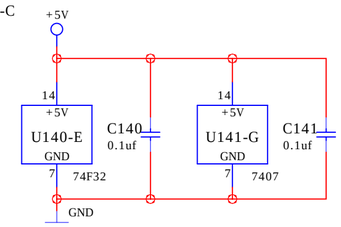

CLK90 SOURCE

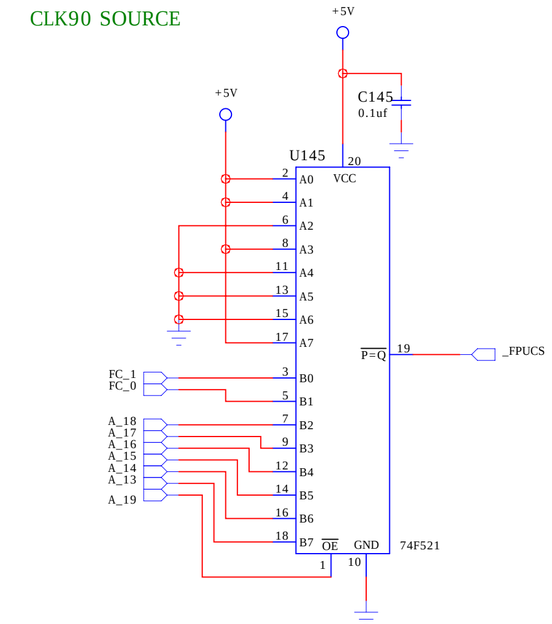

AMIGA
Paul Rezendes
acillclassics@gmail.com

JULY 2018

A4000 Rb
FAT GARY, ROM

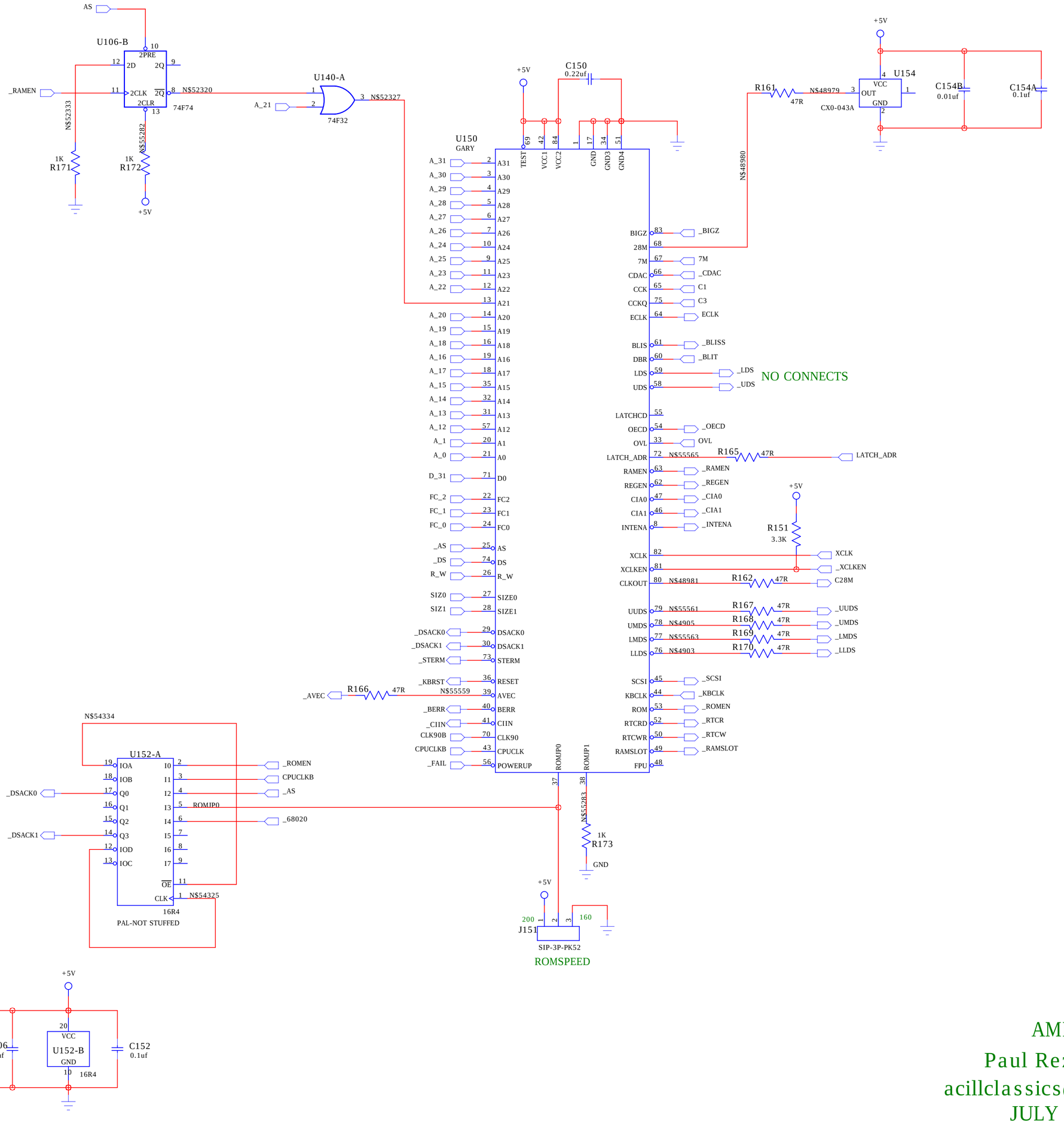

AMIGA
Paul Rezendes
acillclassics@gmail.com
JULY 2018

A4000 Rb

ROMs, RTC, keyboard, power in

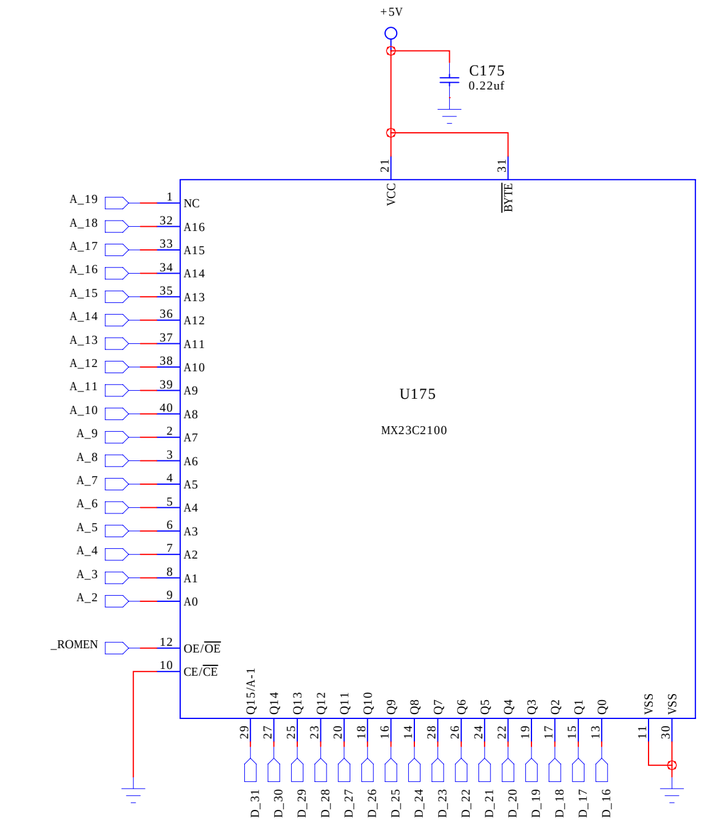

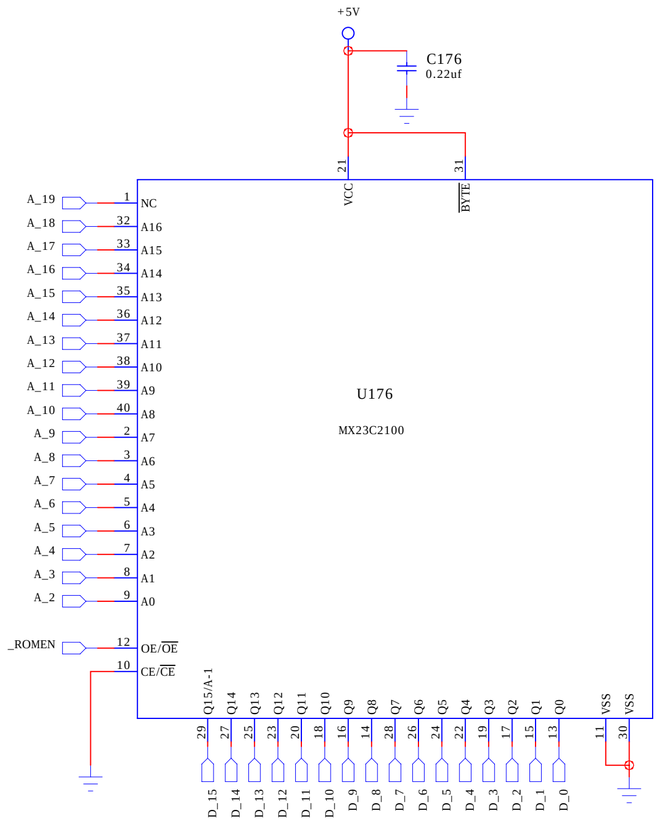

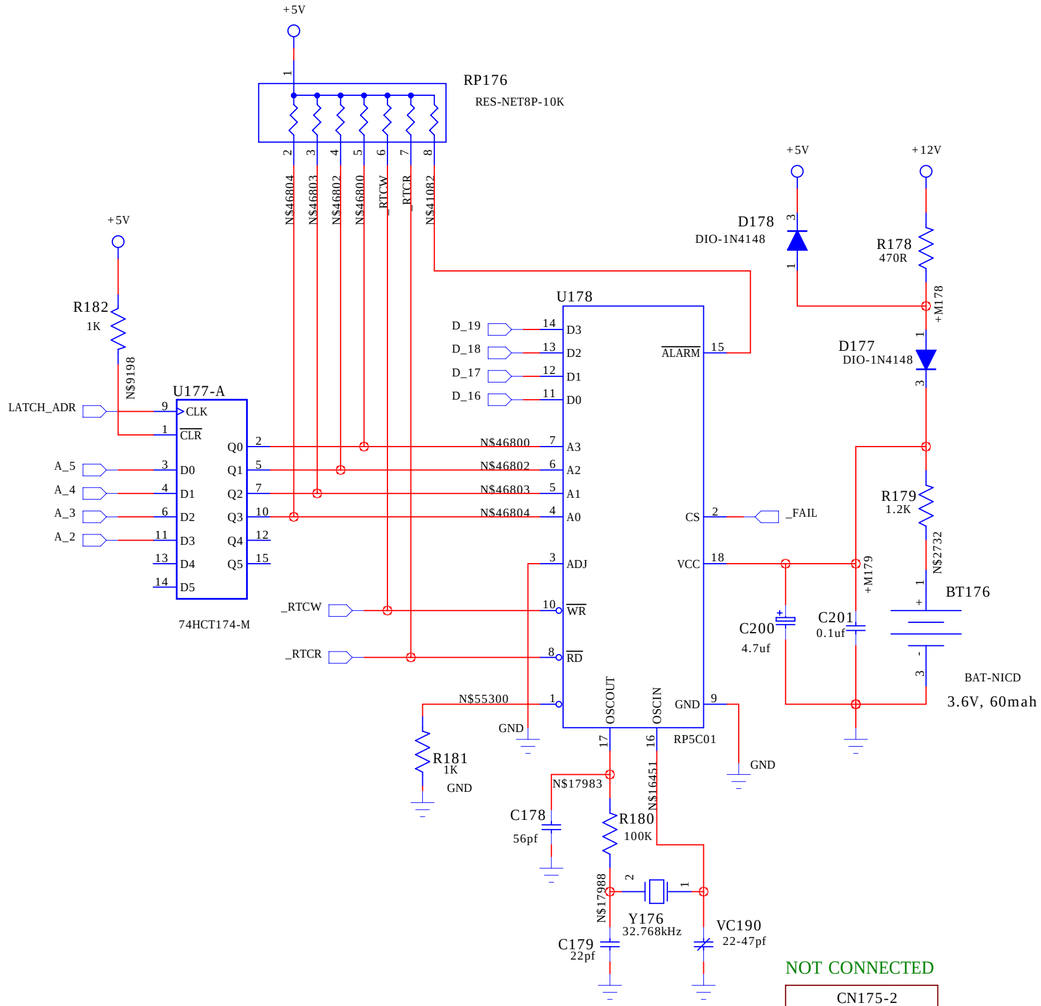

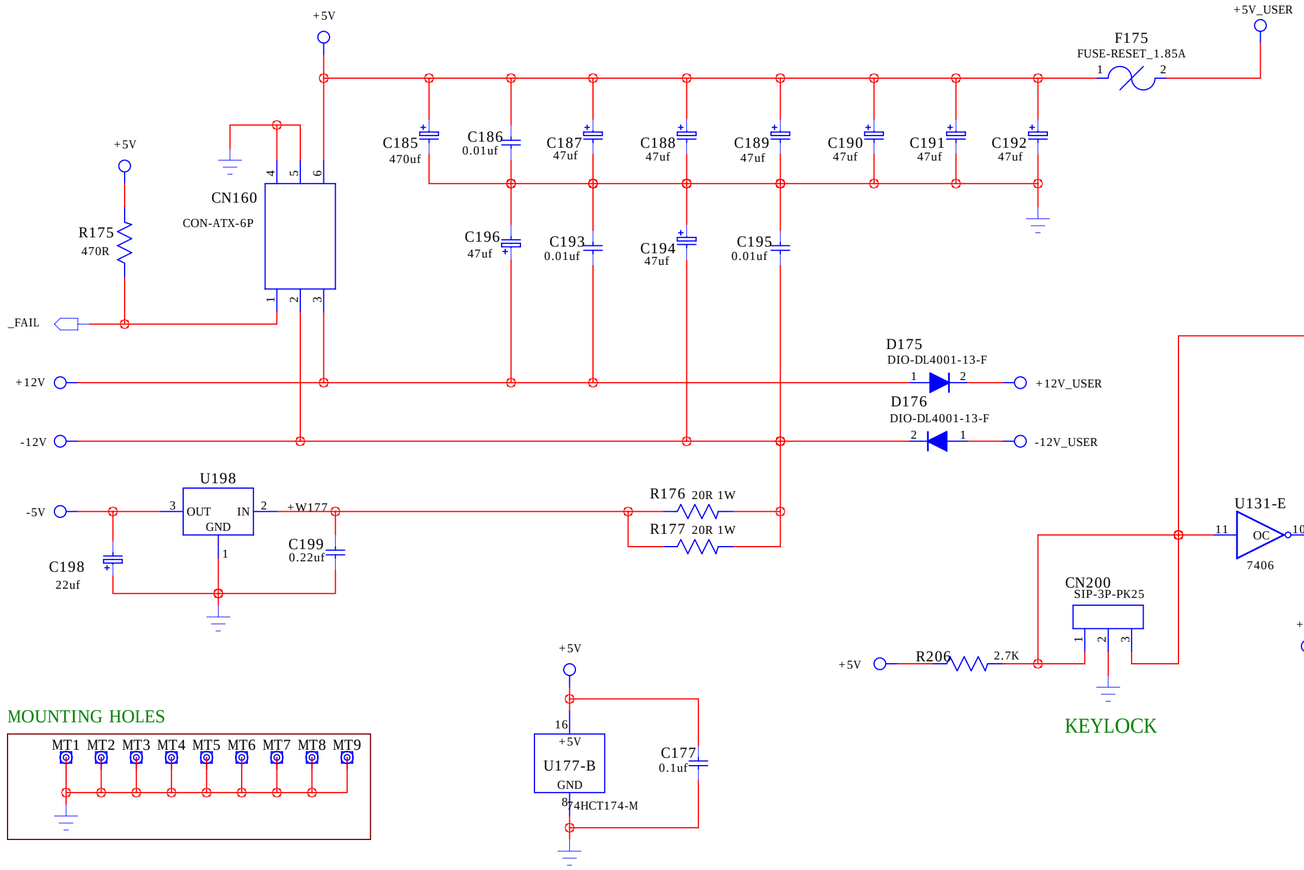

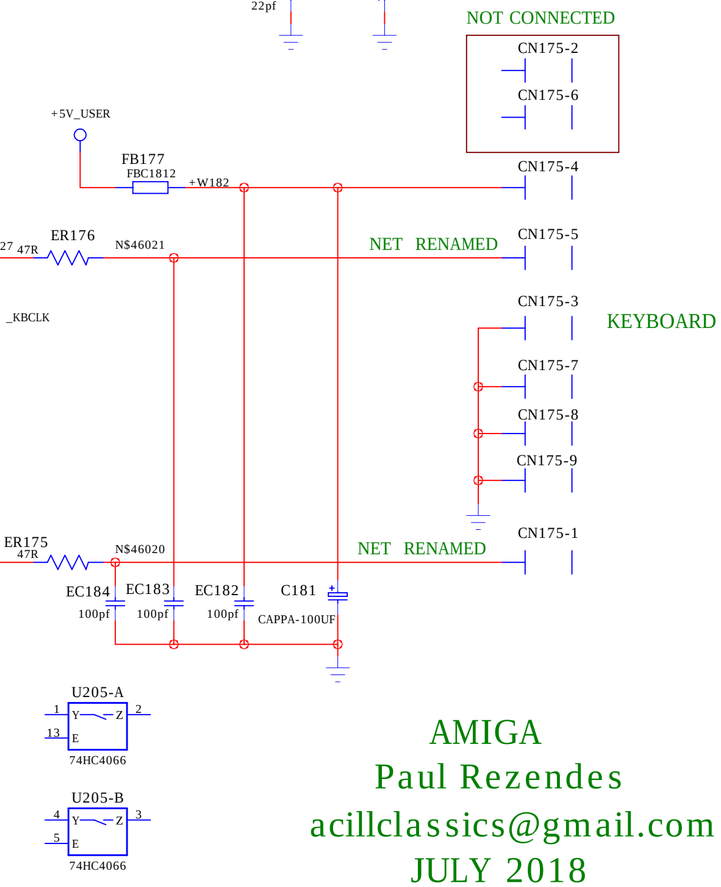

AMIGA
Paul Rezendes
acillclassics@gmail.com
JULY 2018

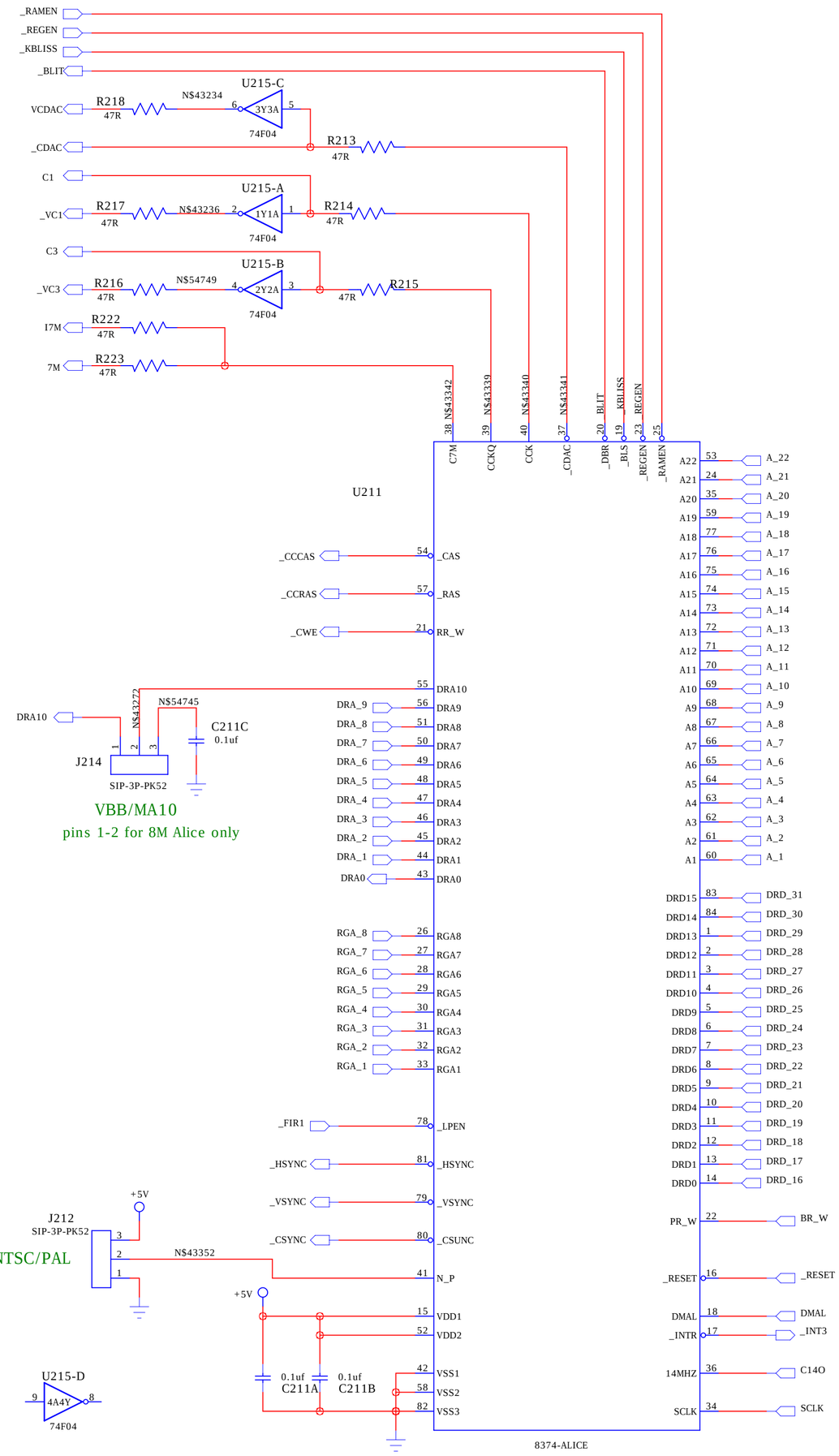

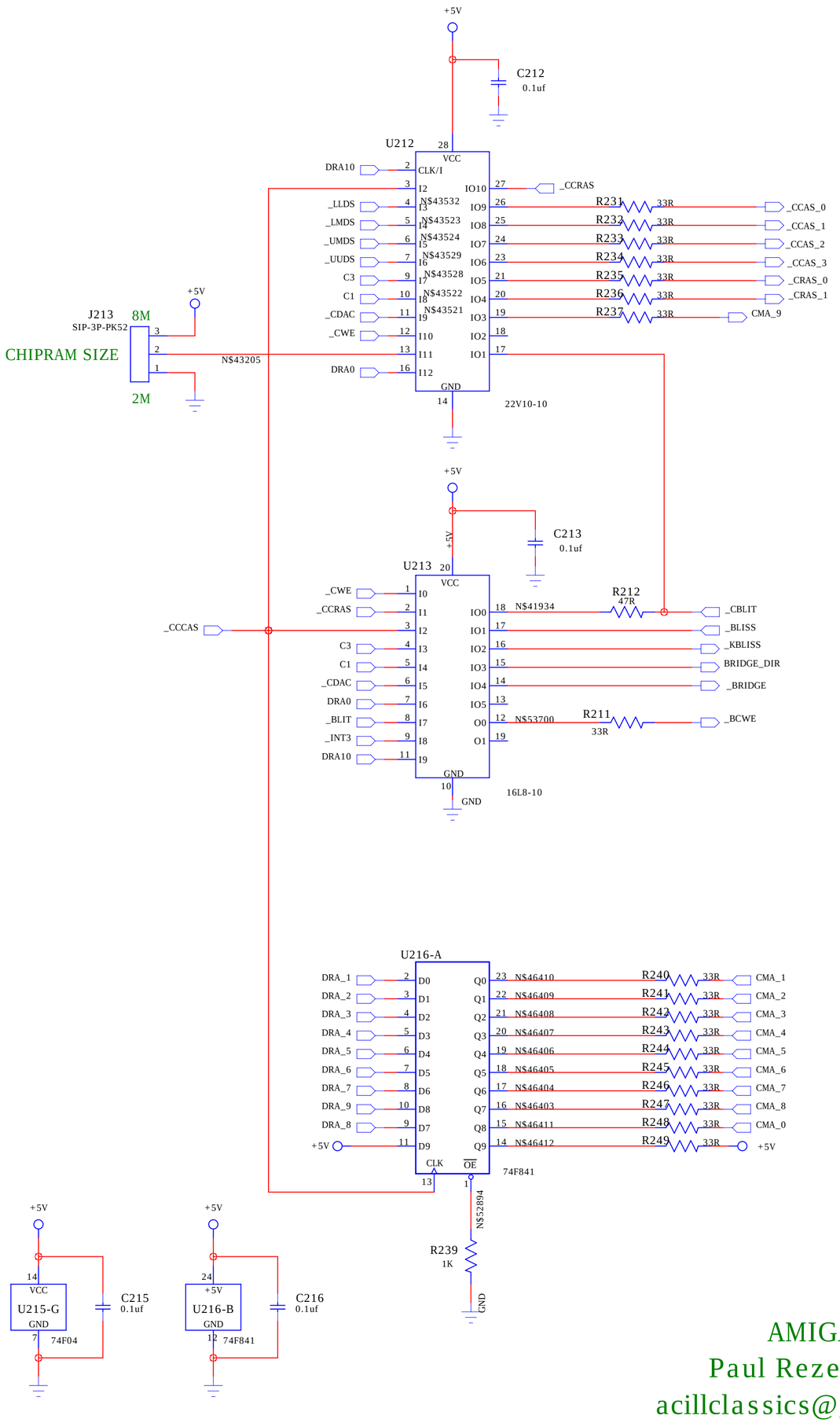

AMIGA
Paul Rezendes
acillclassics@gmail.com
JULY 2018

ADDRESS BUSS D(31:0)
SEE PAGE 12 'BUSTER'
U250 GATE B

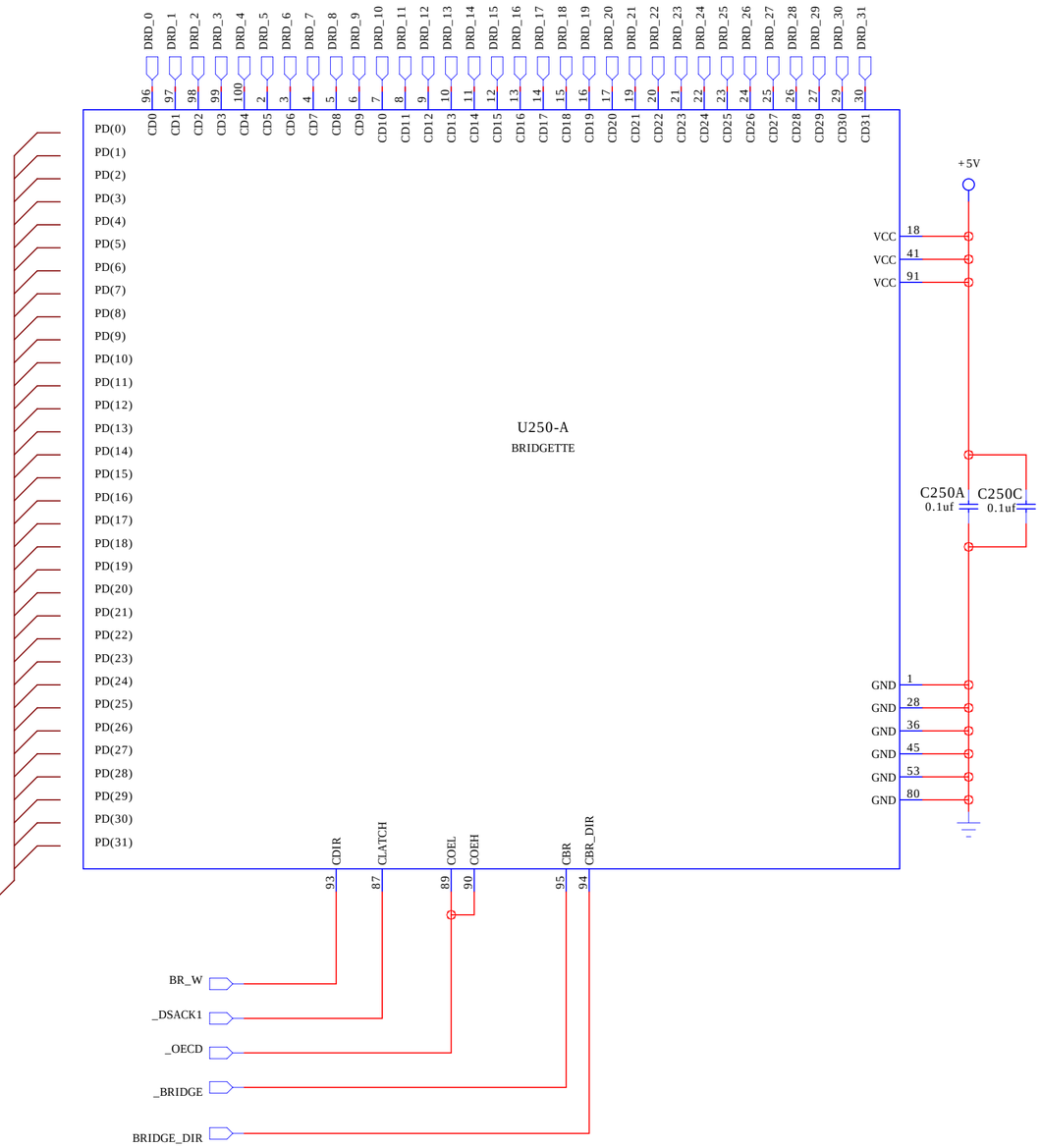

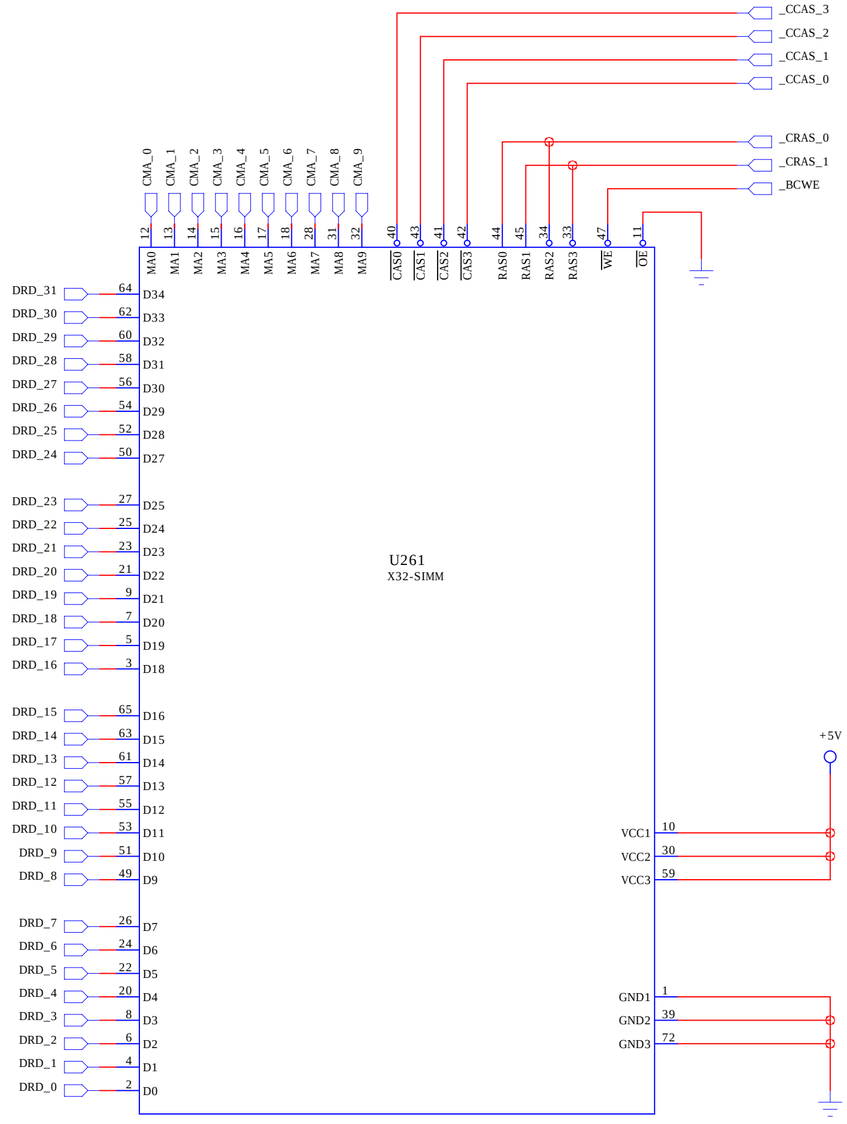

AMIGA
Paul Rezendes
acillclassics@gmail.com
JULY 2018

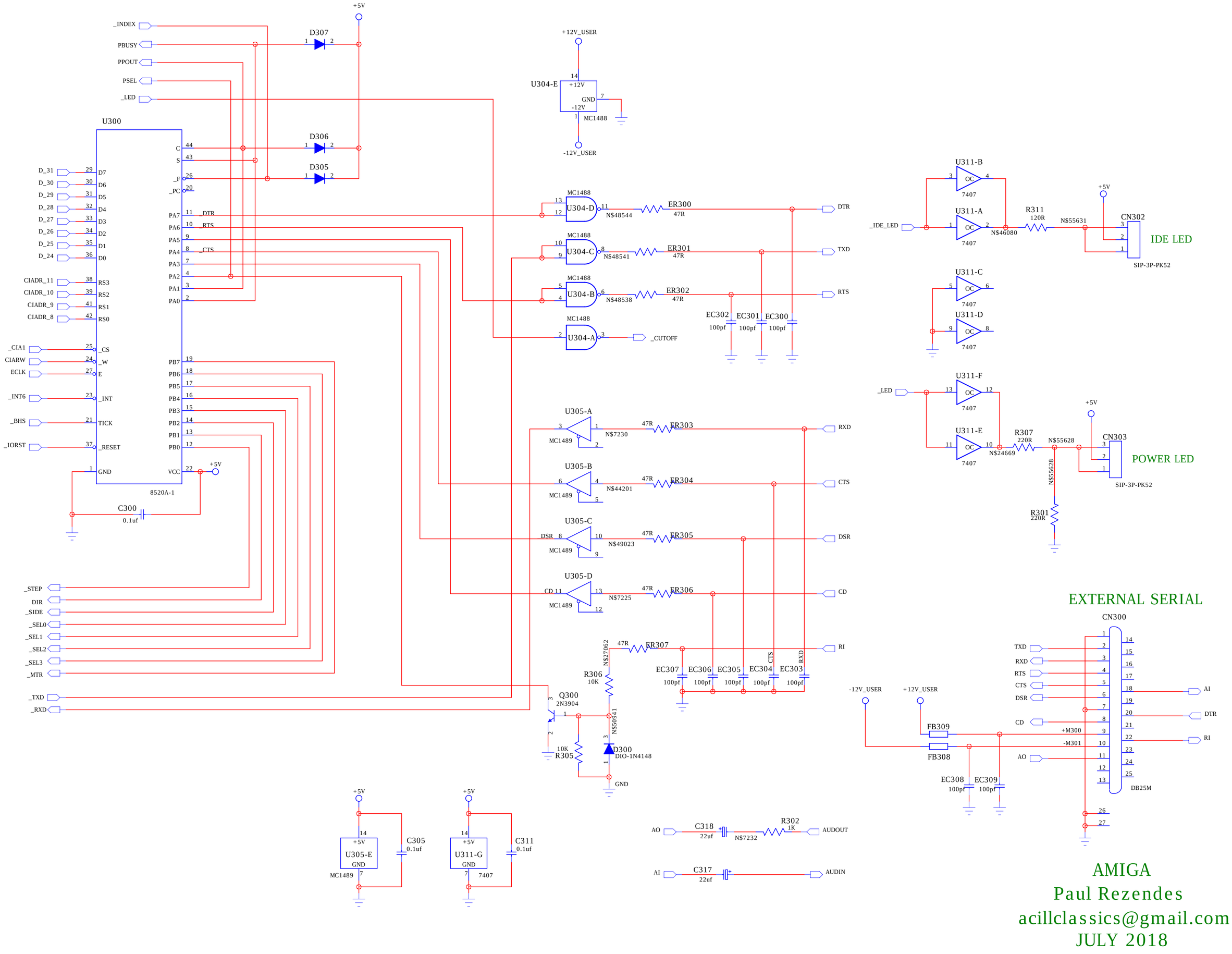

AMIGA
Paul Rezendes
acillclassics@gmail.com
JULY 2018

A4000 Rb
PARALLEL

INTERNAL FLOPPY

EXTERNAL FLOPPY

REDIRECT DF0:

AMIGA
Paul Rezendes
acillclassics@gmail.com
JULY 2018

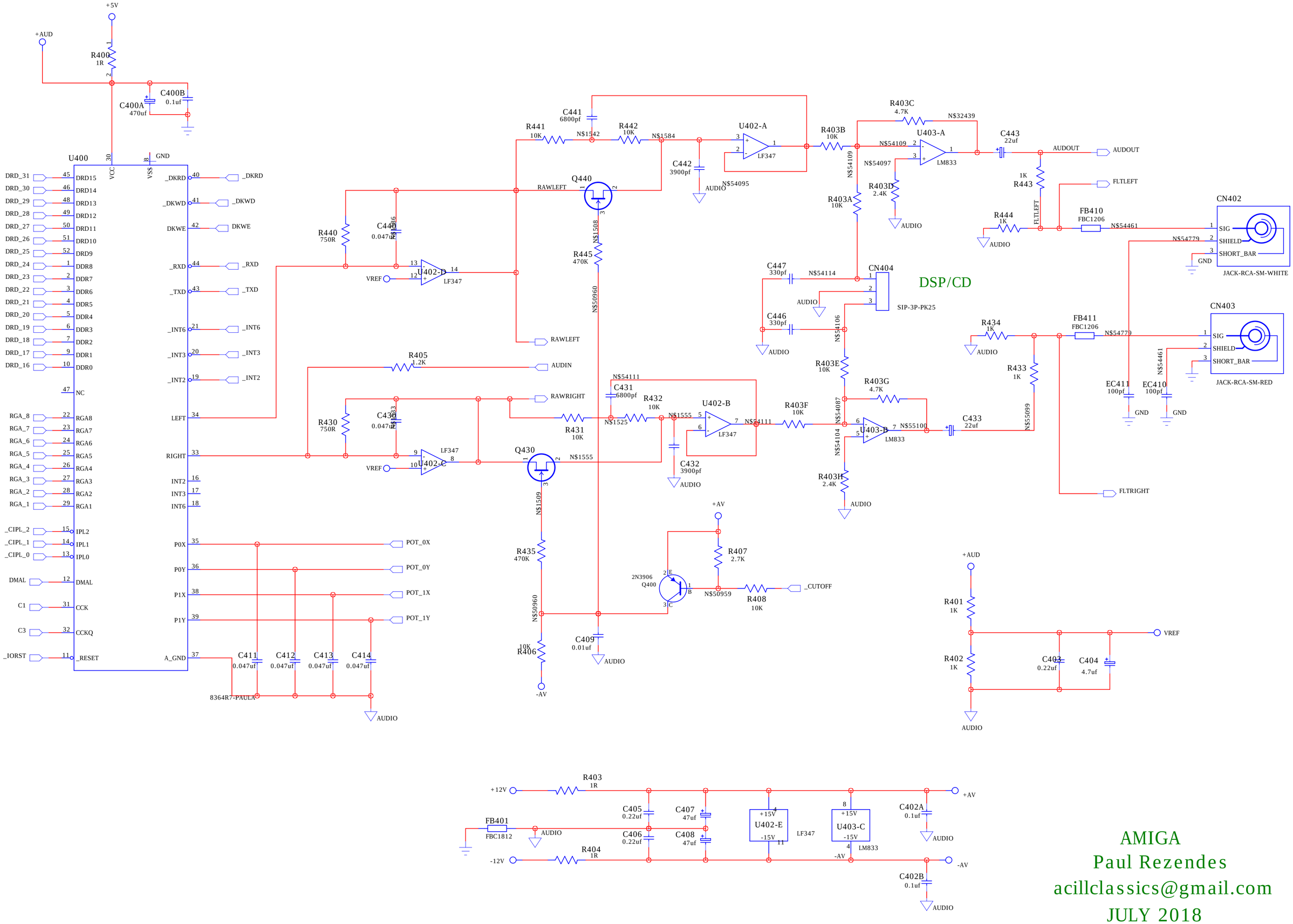

AMIGA
Paul Rezendes
acillclassics@gmail.com
JULY 2018

A4000 Rb
LISA PART A

LISA SYNC

J501 SIP-3P-PK52

68 OHM RESISTORS ON SCHEMATIC
47 OHM RESISTORS ON BOARD

U450
LISA_4203-R2

J502 DAC SYNC

J500 SYNC ON GREEN

U460
ADV7120

U457-A
U456-A
U455-A
U458-A
74FCT245

RP461
RP462
RP463
RES-NET9P-1K

L500
INDC1210-47UH
47uH

MISSING NETS
NOT USED

VIDEO OUT

CN450
DB23M

SCHEMATIC INDICATES FEMALE

AMIGA
Paul Rezendes
acillclassics@gmail.com
JULY 2018

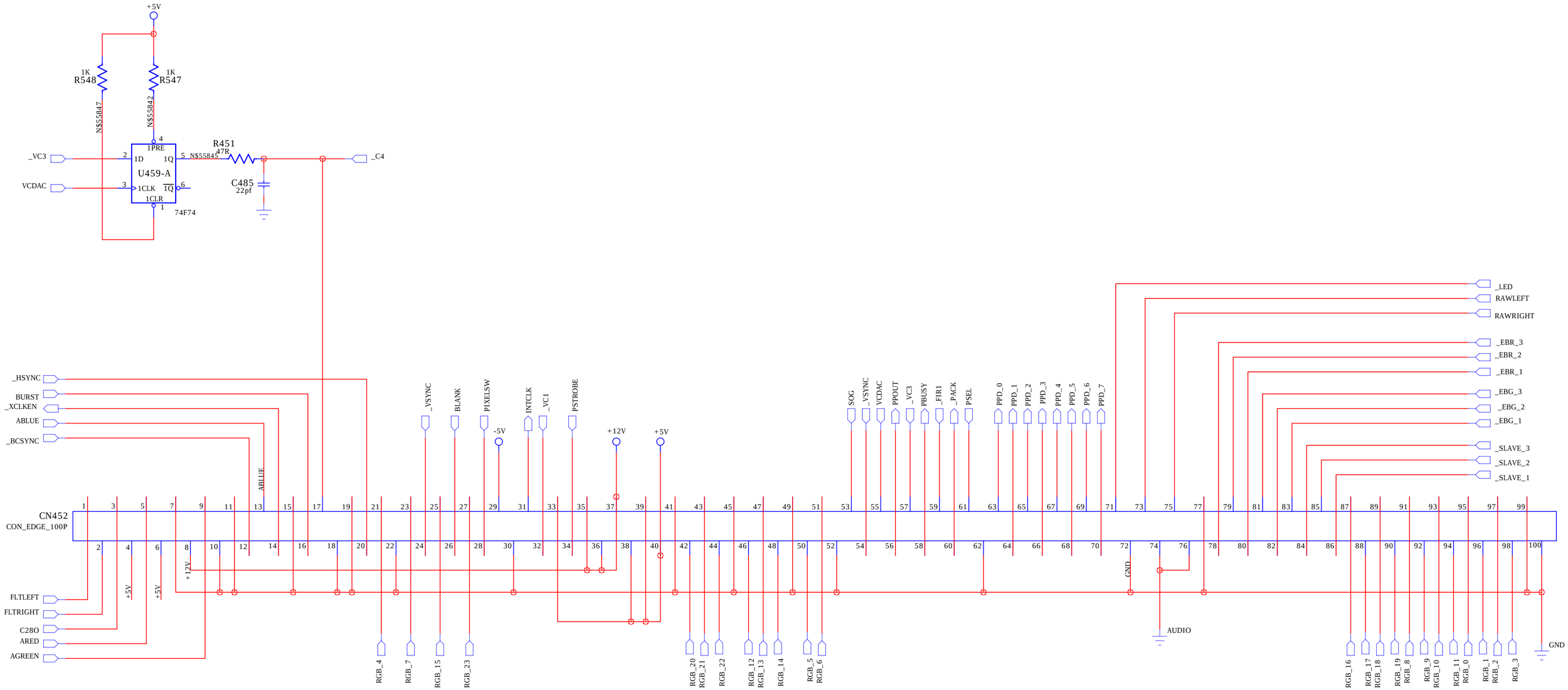

AMIGA
Paul Rezendes
acillclassics@gmail.com
JULY 2018

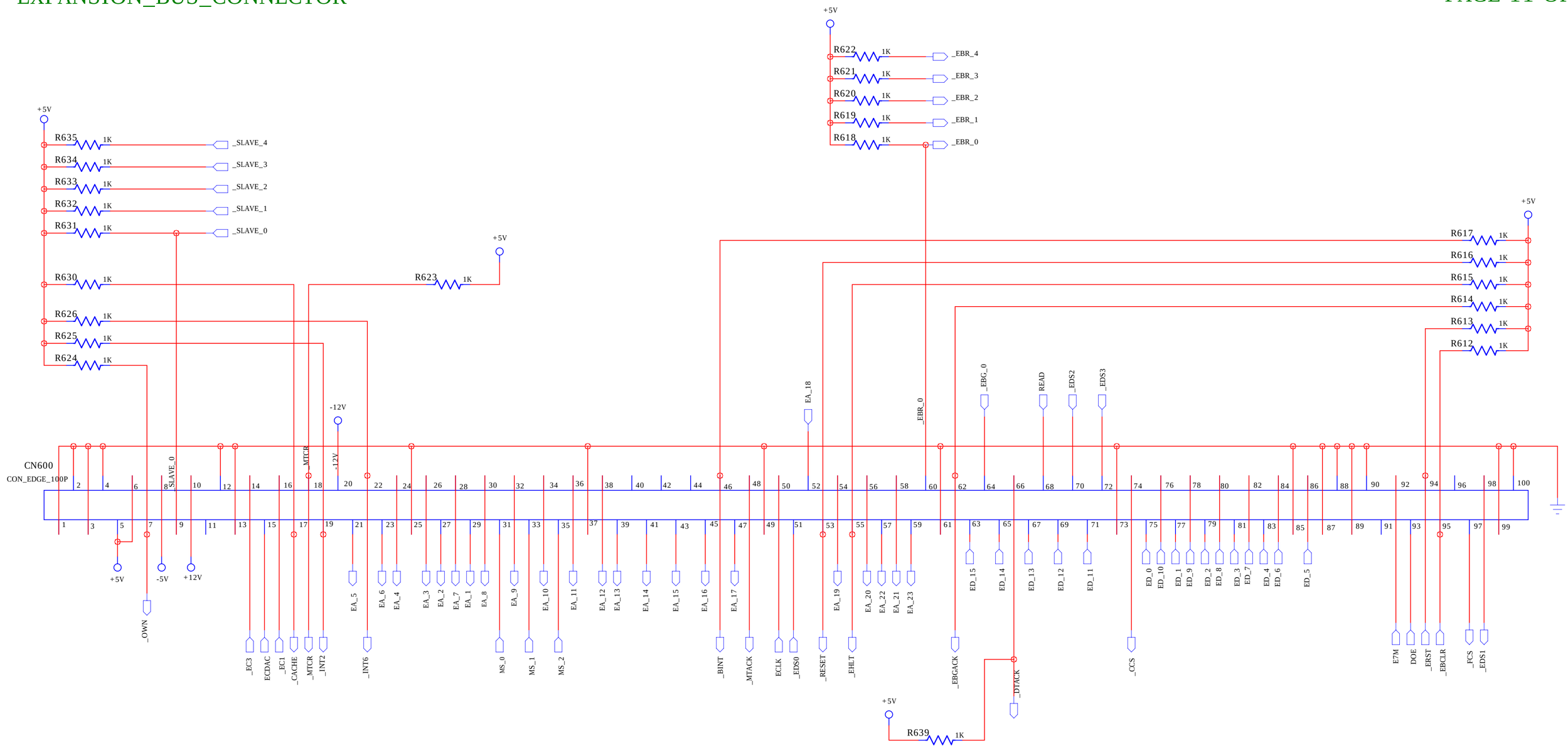

AMIGA
Paul Rezendes
acillclassics@gmail.com
JULY 2018

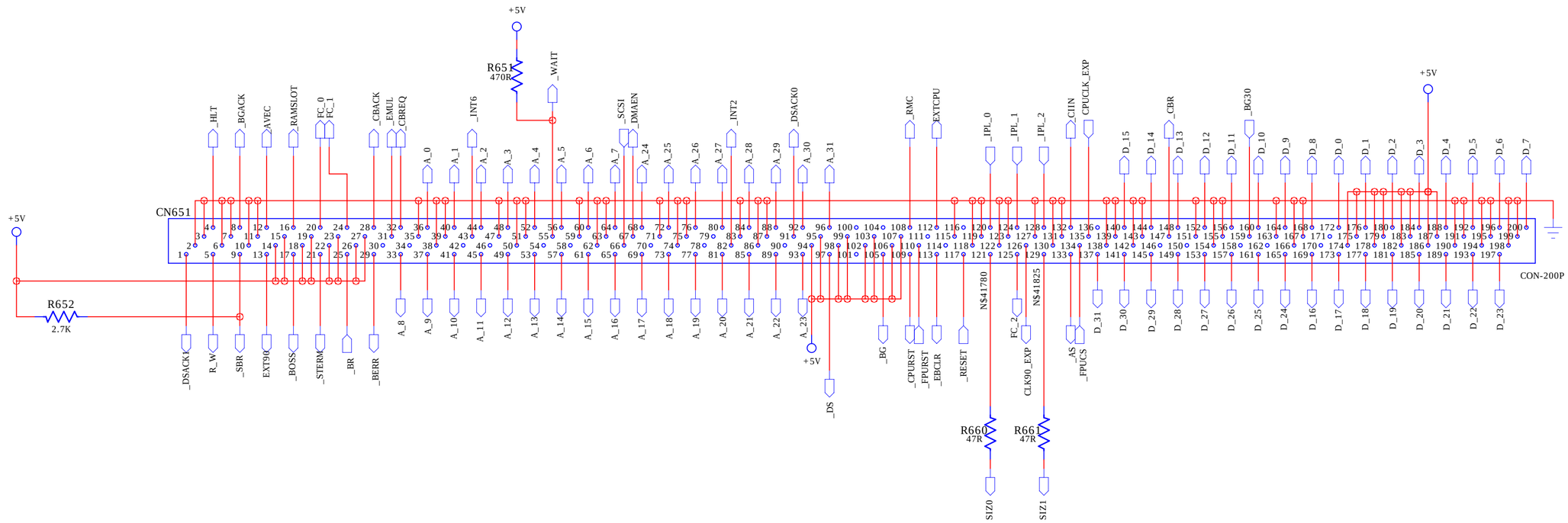

AMIGA
Paul Rezendes
acillclassics@gmail.com
JULY 2018

A4000 Rb Fat Buster

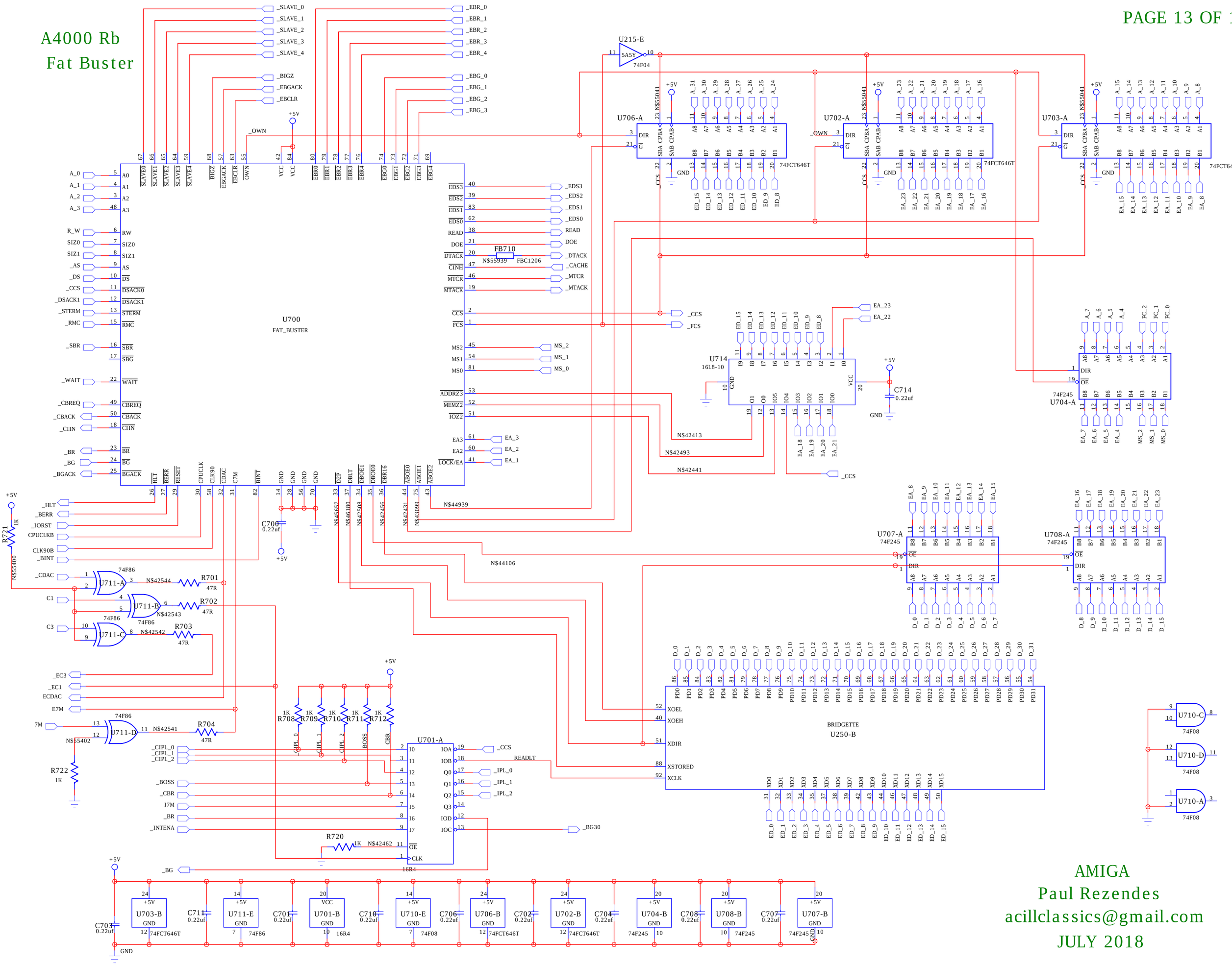

AMIGA
Paul Rezendes
acillclassics@gmail.com
JULY 2018

A4000 Rb

FAST RAM PART A

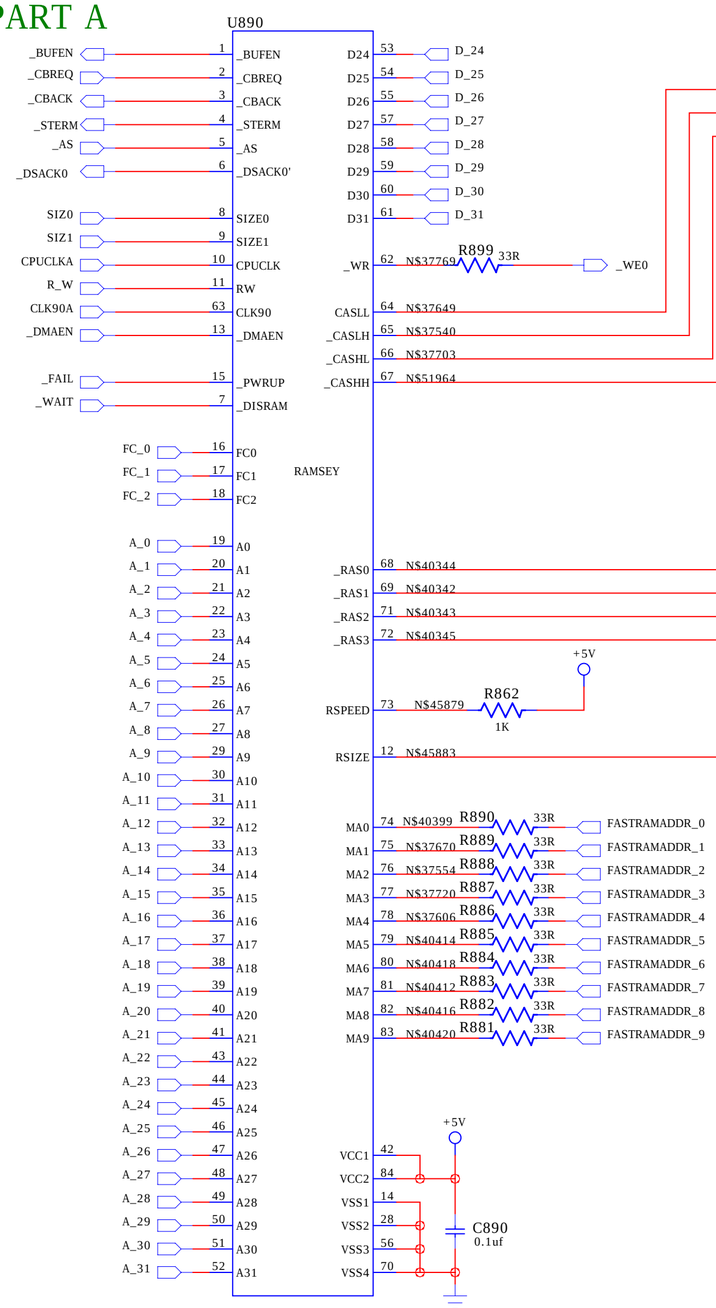

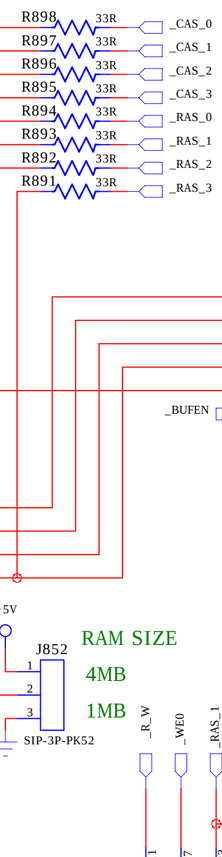

NOT INSTALLED

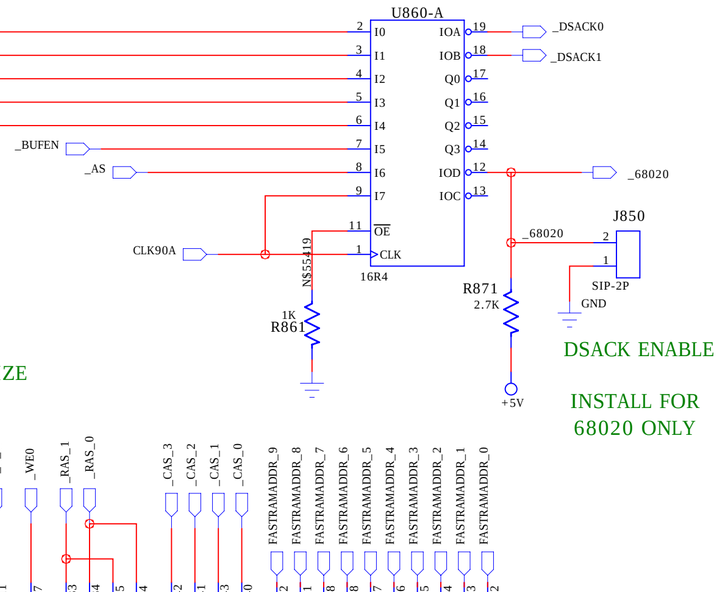

DSACK ENABLE

INSTALL FOR
68020 ONLY

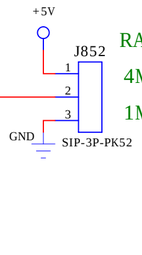

RAM SIZE

4MB

1MB

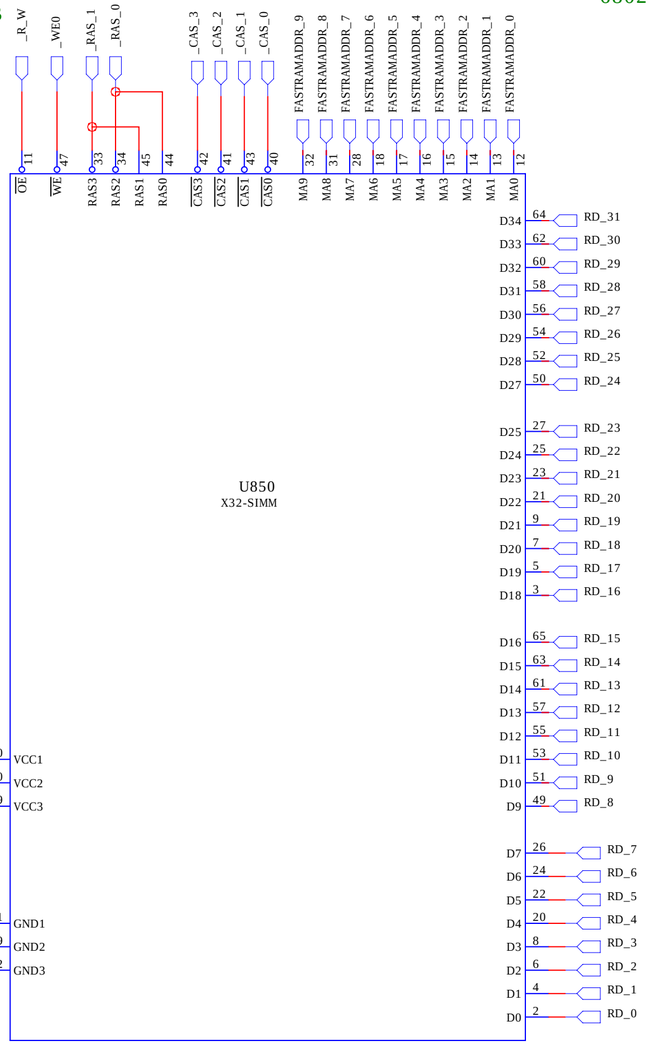

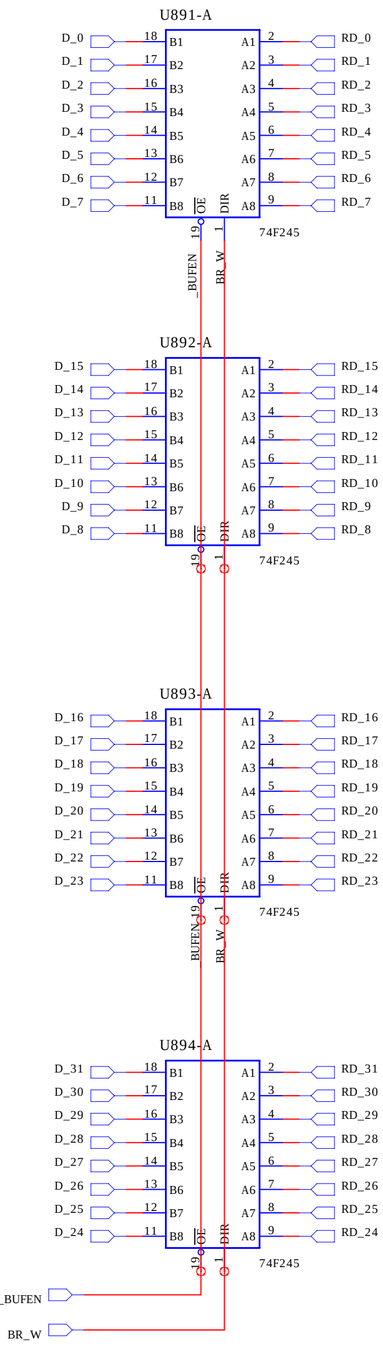

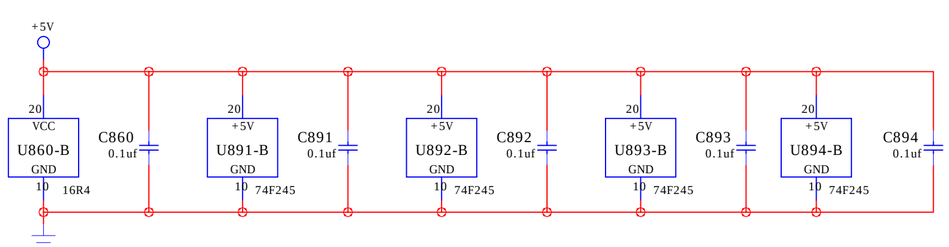

AMIGA
Paul Rezendes
acillclassics@gmail.com

JULY 2018

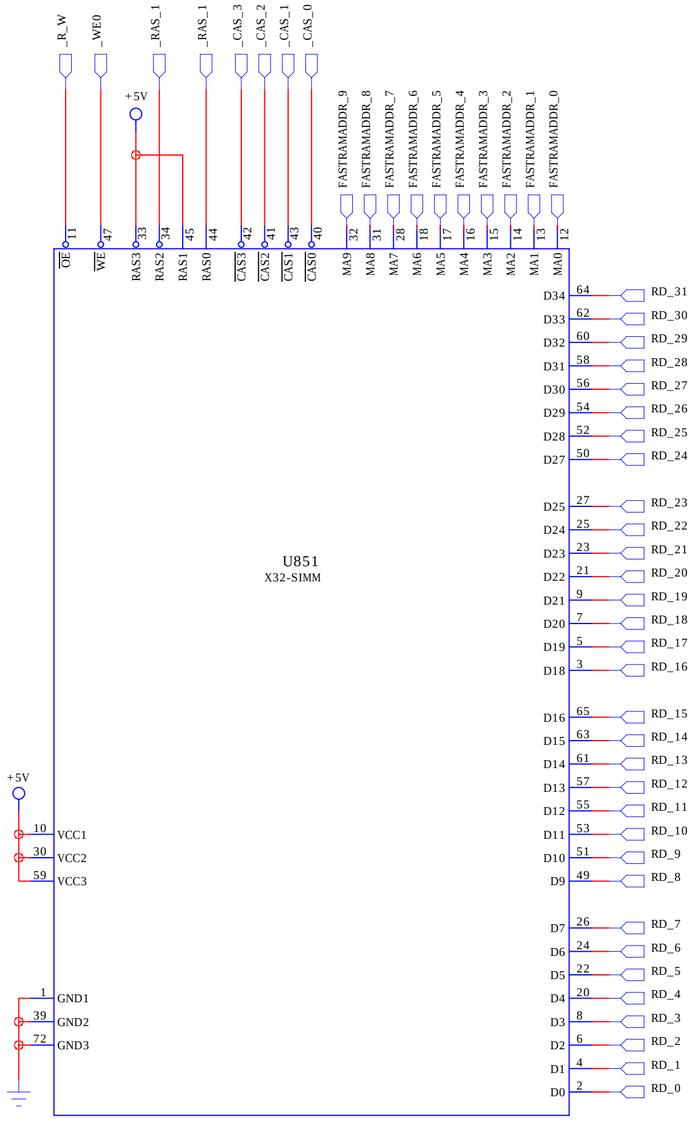

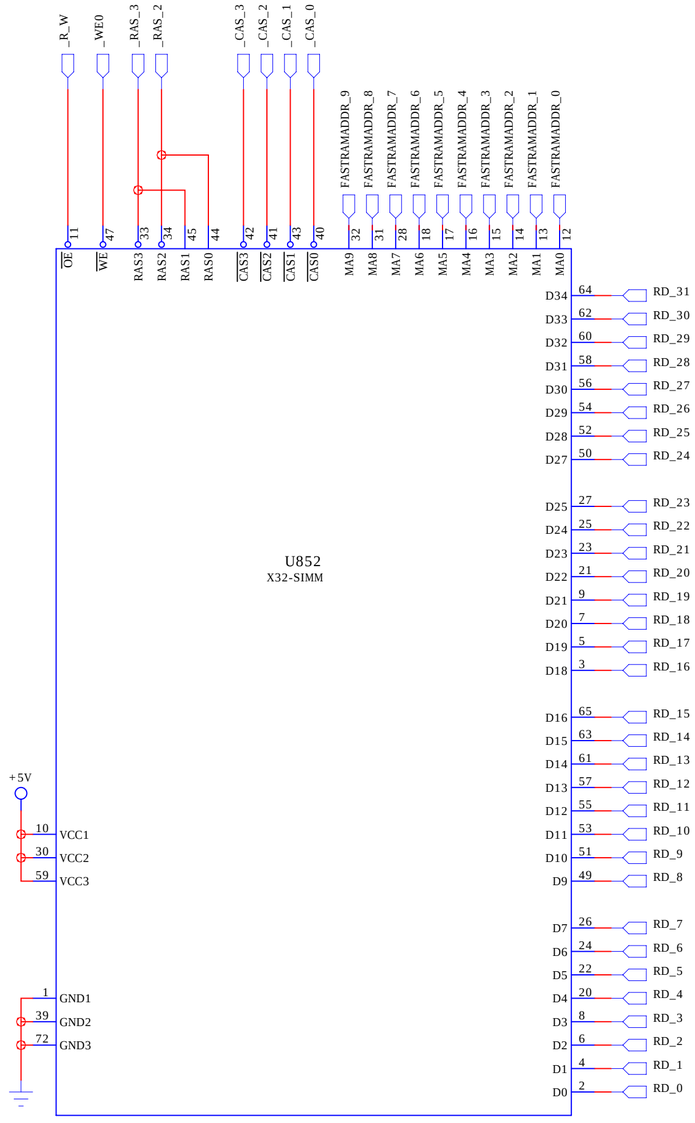

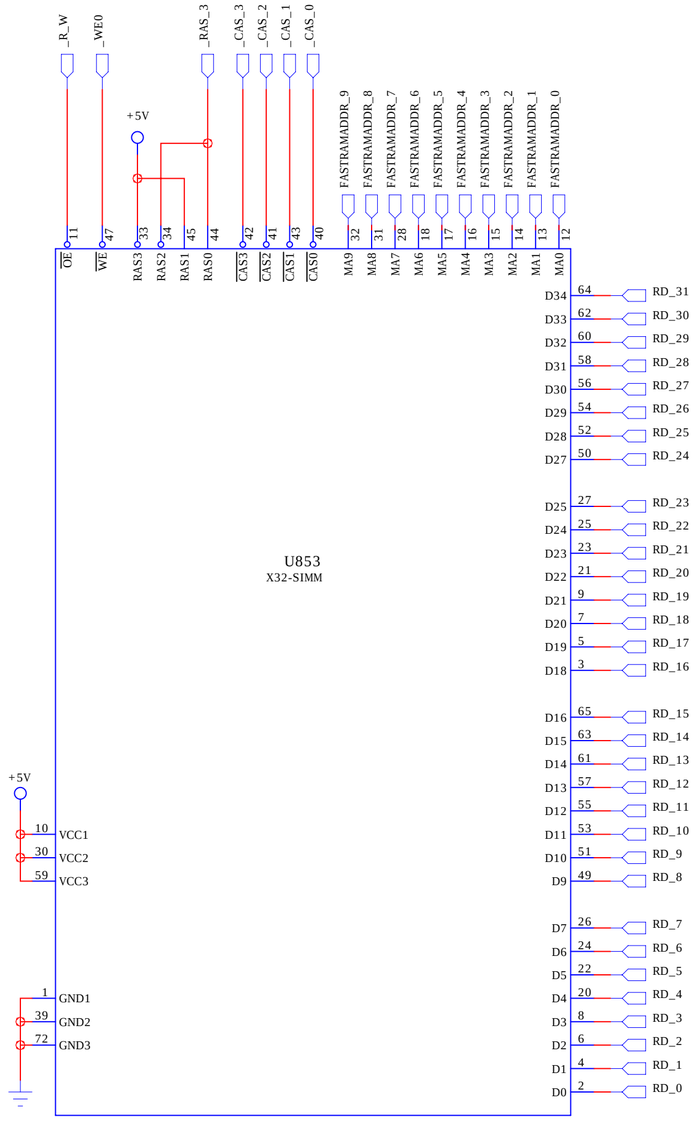

AMIGA
Paul Rezendes
acillclassics@gmail.com

JULY 2018

A4000 Rb
AT IDE Hard Disk Interface

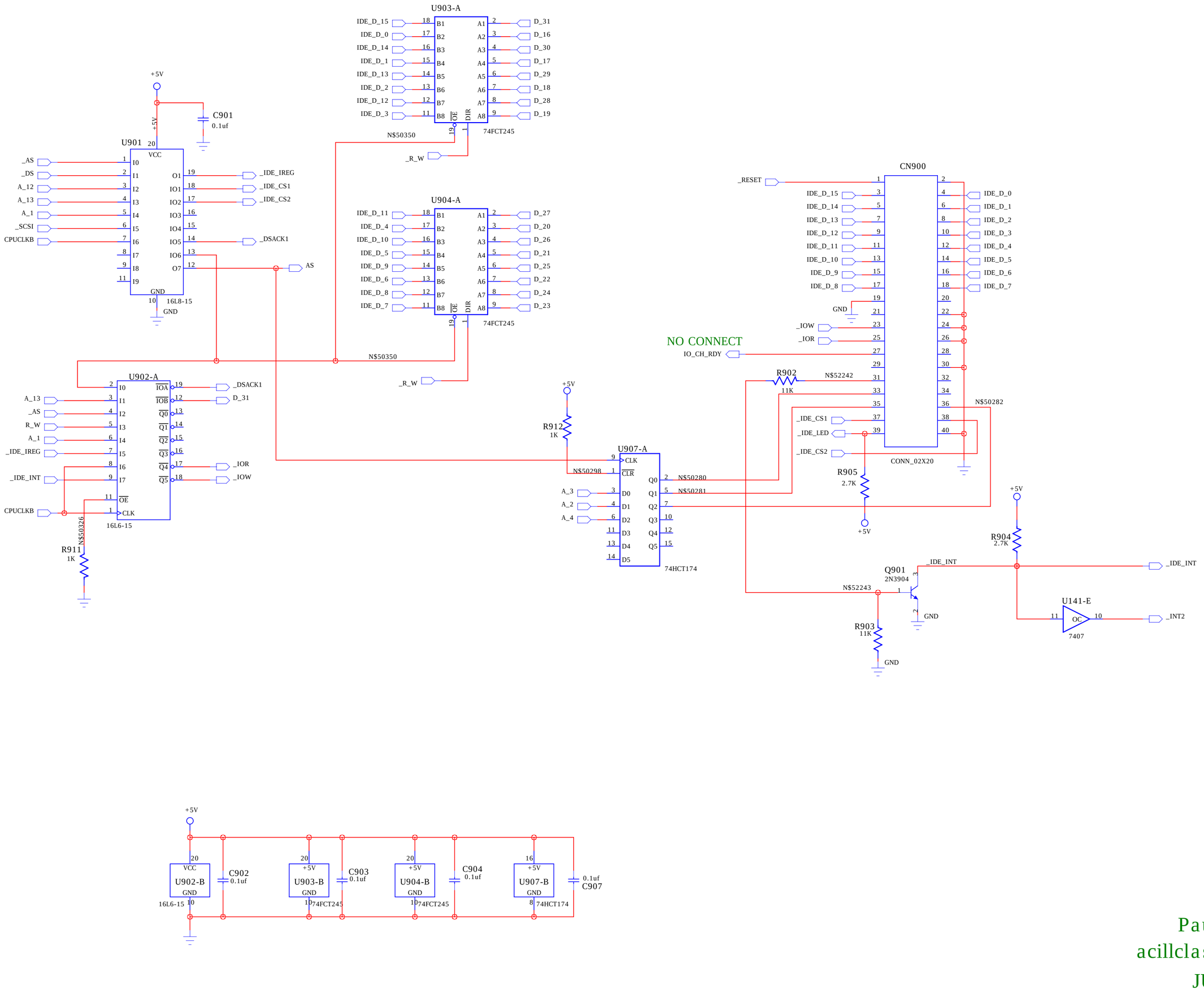

AMIGA
Paul Rezendes
acillclassics@gmail.com
JULY 2018

A4000 Rb
Mouse & Joystick connectors

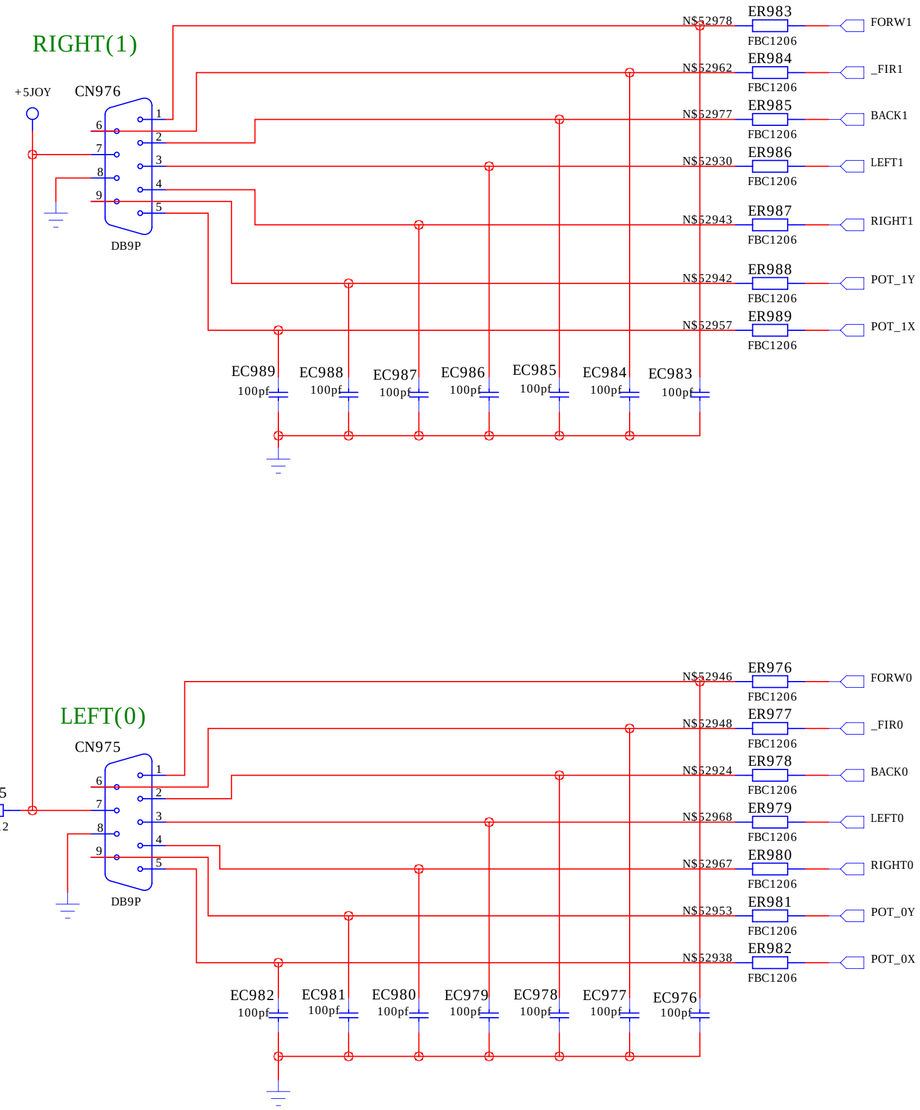

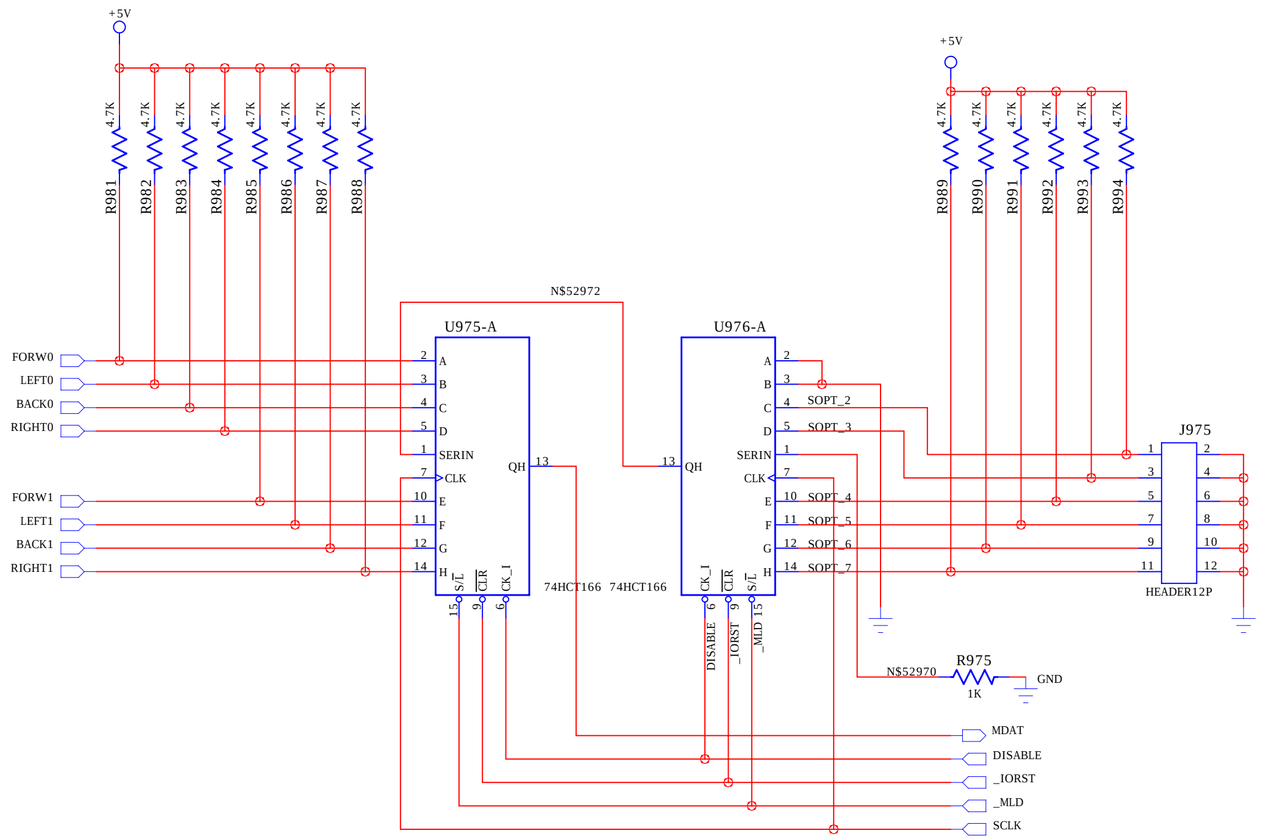

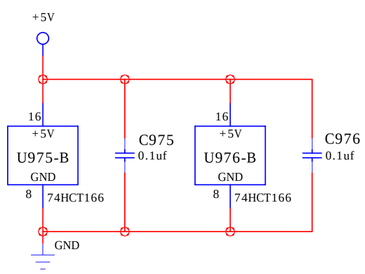

AMIGA
Paul Rezendes
acillclassics@gmail.com
JULY 2018