IN THE HIS NAME

Created by: Amir Mohammad Vahedi

FLAPPING WING ROBOT

- The nonlinear dynamics of a bird-like flapping wing robot under randomly uncertain disturbances
- was studied in this study. The bird-like flapping wing robot was first simplified into a
- two-rod model with a spring connection. Then, the dynamic model of the robot under randomly
- uncertain disturbances was established according to the principle of moment equilibrium,
- and the disturbances were modeled in the form of bounded noise. Next, the energy
- model of the robot was established. Finally, numerical simulations and experiments were
- carried out based on the above models.

DYNAMIC MODEL

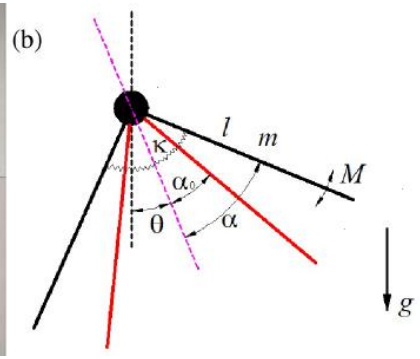

$$\begin{cases} \frac{2}{3}ml^2\ddot{\theta} &= -mgl\cos\alpha\sin\theta - M_1 \\ \frac{2}{3}ml^2\ddot{\alpha} &= -mgl\sin\alpha\cos\theta - 4k(\alpha-\alpha_0) - M_2 \end{cases}$$

$$\begin{cases} \frac{2}{3}ml^2\frac{d^2\theta}{d\tilde{t}^2}\frac{3g}{2l} = -mgl\cos\alpha\sin\theta - \tilde{M}_1 mgl \\ \frac{2}{3}ml^2\frac{d^2\alpha}{d\tilde{t}^2}\frac{3g}{2l} = -mgl\sin\alpha\cos\theta - 4\frac{mgl\tilde{k}}{4}(\alpha-\alpha_0) - \tilde{M}_2 mgl \end{cases}$$

$$\begin{cases} \ddot{\theta} = -\cos\alpha\sin\theta - M_1 \\ \ddot{\alpha} = -\sin\alpha\cos\theta - k(\alpha-\alpha_0) - M_2 \end{cases}$$

$$M_i = A_i\sin[\omega_i t + \sigma_i B_i(t) + \gamma_i] \quad (i = 1, 2)$$

MODEL ENERGY

$$E = \frac{1}{2}(\dot{\alpha}^2 + \dot{\theta}^2) - \cos\alpha\cos\theta + \frac{1}{2}k(\alpha - \alpha_0)^2 - \frac{A_1 \cos[\omega_1 t + \sigma_1 B_1(t) + \gamma_1]}{\omega_1 + \sigma_1 B'_1(t)} - \frac{A_2 \cos[\omega_2 t + \sigma_2 B_2(t) + \gamma_2]}{\omega_2 + \sigma_2 B'_2(t)}$$

FIRS ORDER DYNAMIC MODEL

$$\begin{cases} \dot{\theta} = u_\theta \\ \dot{\alpha} = u_\alpha \\ \dot{u}_\theta = -\cos\alpha\sin\theta - M_1 \\ \dot{u}_\alpha = -\sin\alpha\cos\theta - k(\alpha - \alpha_0) - M_2 \end{cases}$$

DYNAMIC SIMULATION

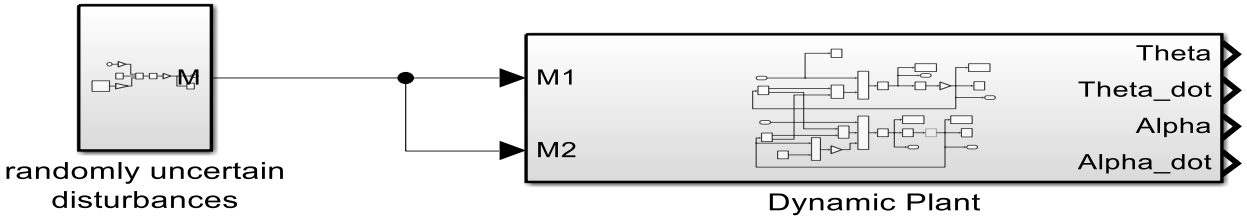

RANDOMLY UNCERTAIN DISTURBANCES

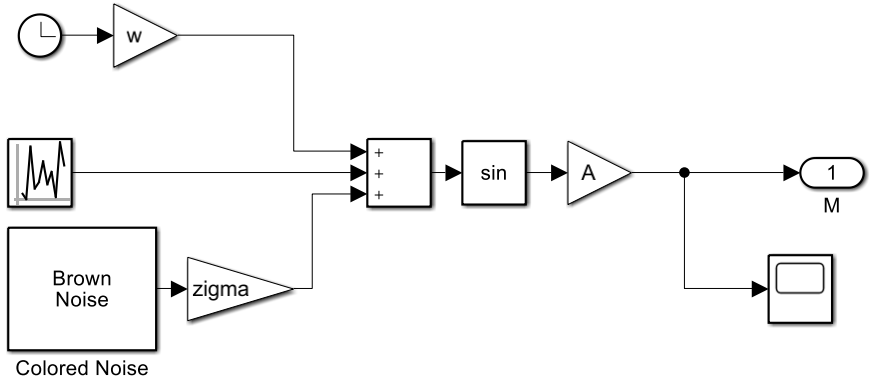

DYNAMIC PLANT

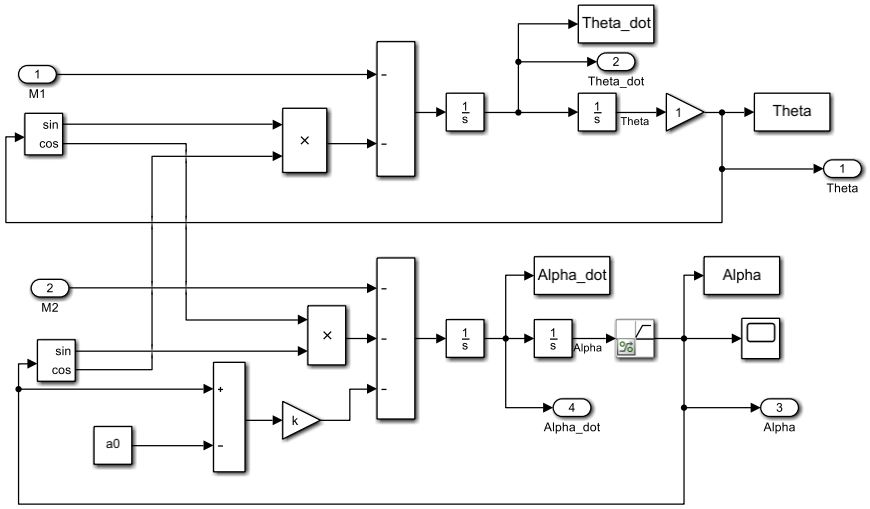

MAIN STATES

- Periodic State

$$k = 32,\ \alpha_0 = \tfrac{\pi}{4},\ \text{and an initial state of } \mathbf{x}_0 = [\theta, \alpha, \dot{\theta}, \dot{\alpha}] = [\pi/3, \pi/6, 0, 0].$$

- Chaotic

$$k = 8,\ \alpha_0 = \tfrac{\pi}{4},\ \text{and an initial state of } \mathbf{x}_0 = [\theta, \alpha, \dot{\theta}, \dot{\alpha}] = [\pi/2, \pi/4, 1.1521, 0].$$

IDEAL ENVIRONMENT SIMULATION

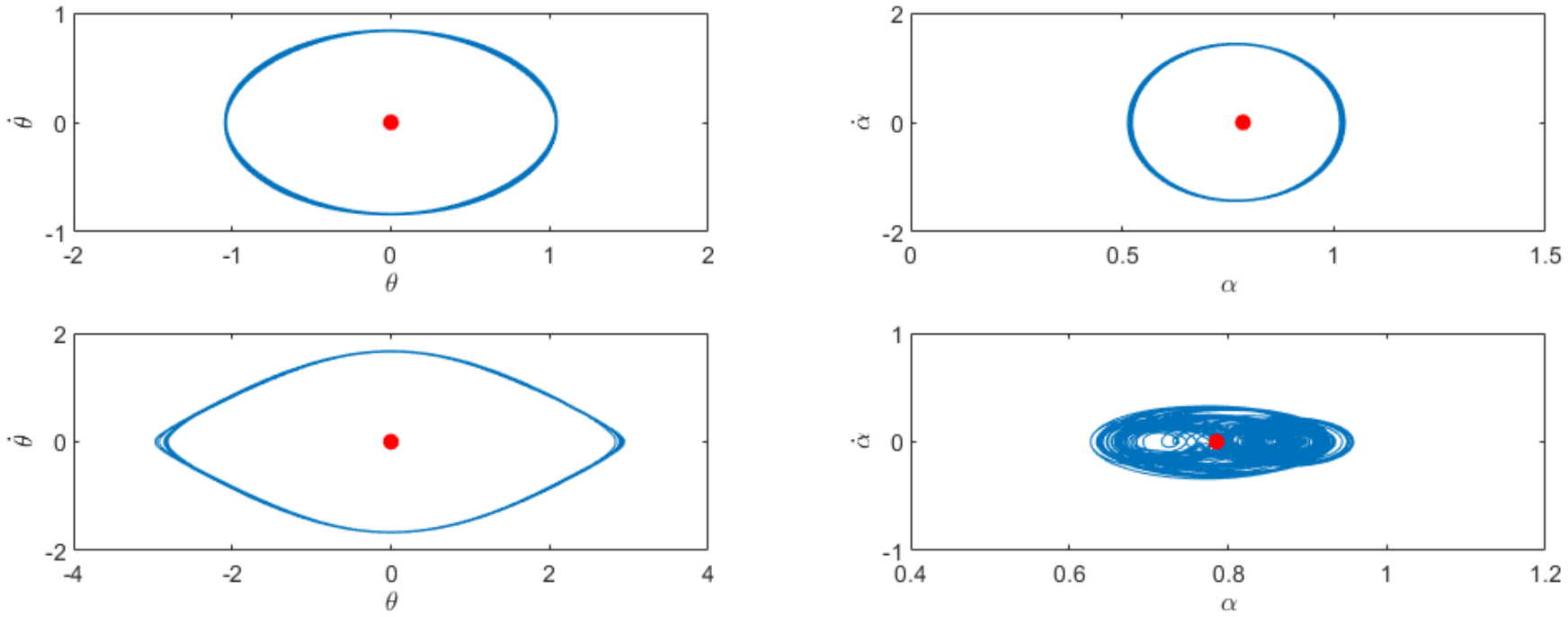

DYNAMIC SIMULATION UNDER DISTURBANCES

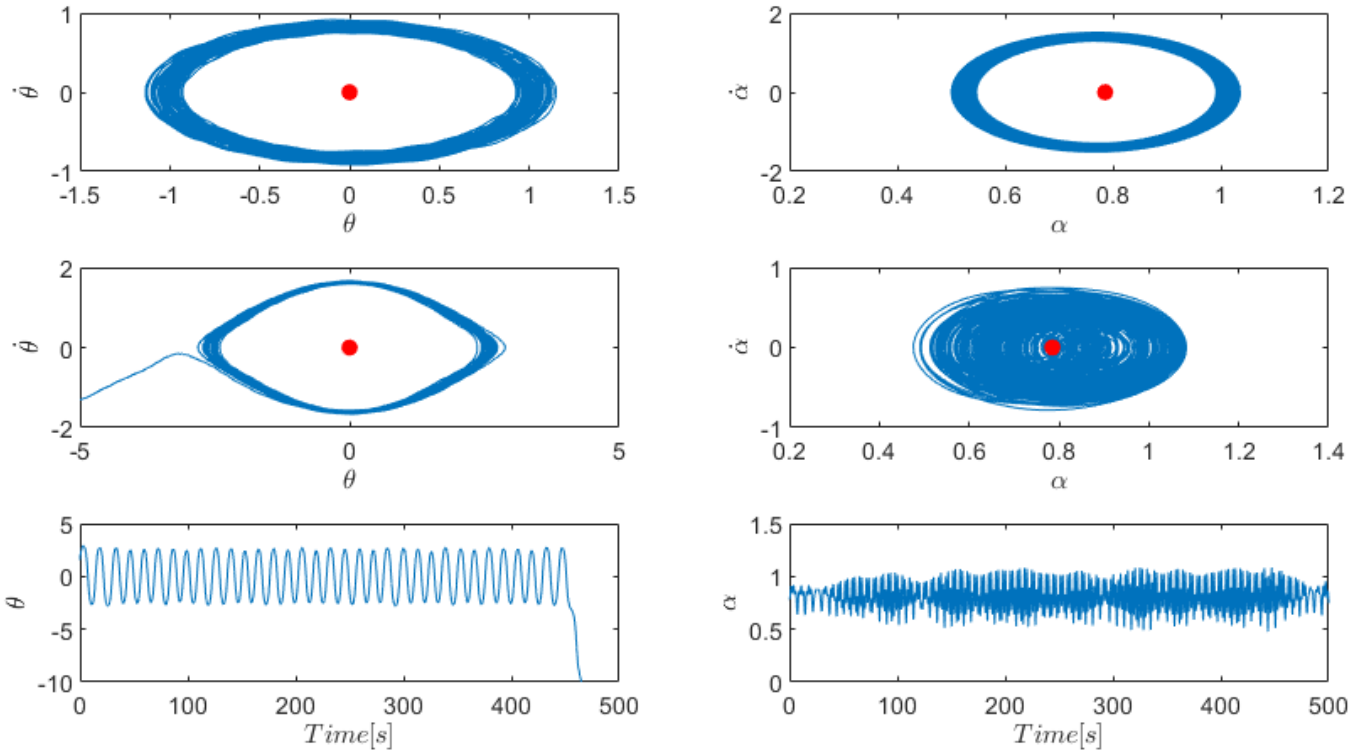

DYNAMIC SIMULATION WITH DIFFERENT SPRING STIFFNESSES

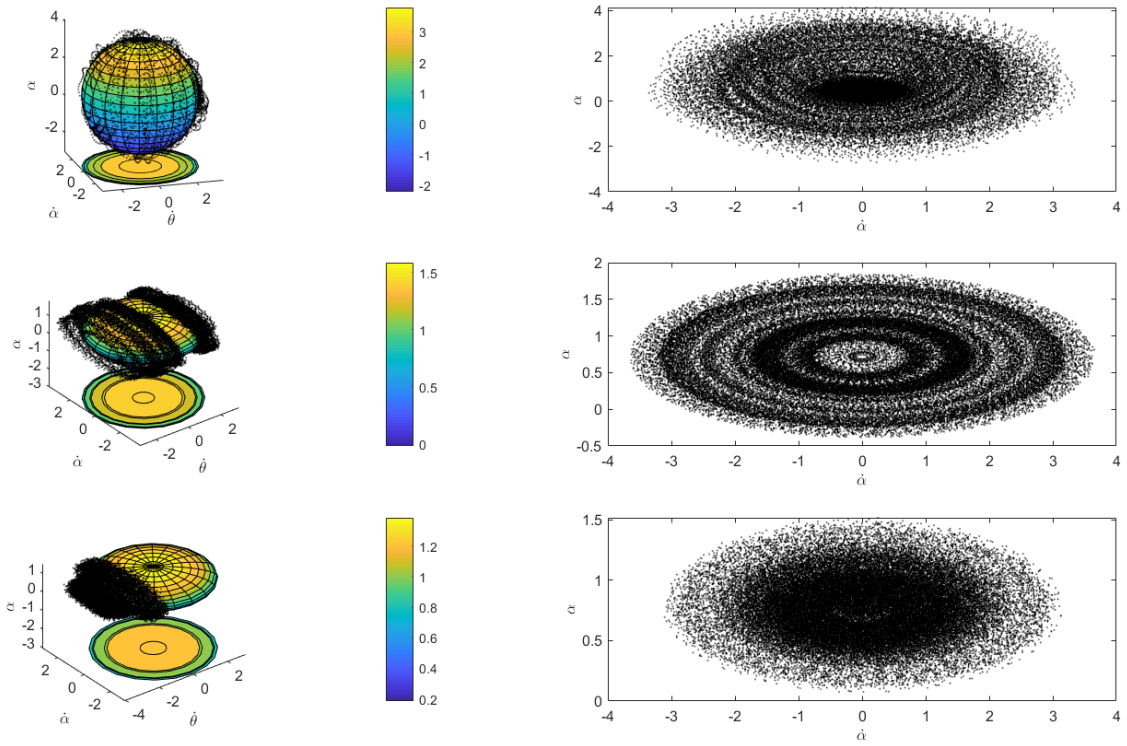

DYNAMIC SIMULATION UNDER DIFFERENT DISTURBANCES

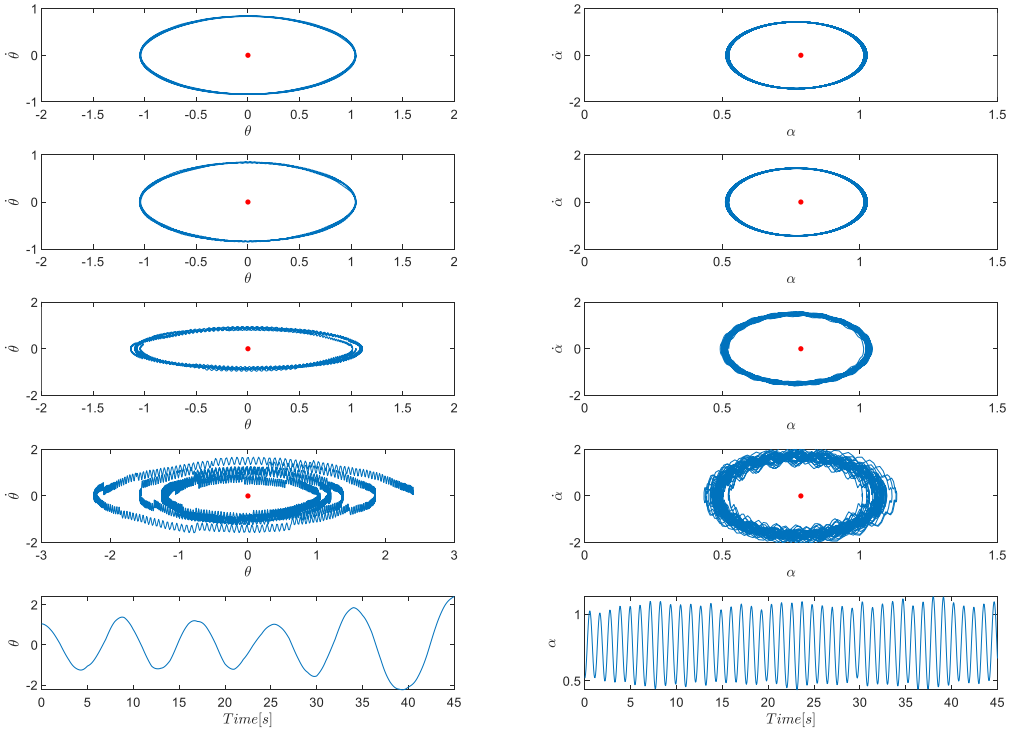

CONCLUSION

- The results show that the robot is more likely to
- deviate from its normal trajectory when the randomly uncertain disturbances are applied in a
- chaotic state than in a periodic state. With the increase of the spring stiffness under the randomly
- uncertain disturbances, the robot has a stronger ability to reject the disturbances. The
- mass center of the robot is vital to realize stable flights. The greater the amplitude of randomly
- uncertain disturbances, the more likely it is for the robot to be in a divergent state.

THE END